2. Technical Specifications & Service Tools

SR-80 Specifications

Engine
- Model: Perkins 804C-33T
- Displacement: 3.3 liter
- Gross horsepower: 80.5 hp (60 kW)
- Torque: 186 lb-ft. (253 Nm)
- Idle rpm: 1000 (low idle), 2600 (high idle)
- Average water /thermostat temperature: 190°F, 87.8°C

Transmission
- Model: Cat A22VG45 tandem (Rexroth)

Drive Pumps
- Displacement: 2.7459 in3/rev (45 cc/rev)
- Relief pressure: 5500 psi (380 bar)
- Flow: 30.91 gpm (117 lpm) @ 2600 rpm (per pump)

Charge Pump
- Displacement: 1.373 in3/rev (22.5 cc/rev)
- Relief pressure: 475 +/- 30 psi (32.75 bar)
- Flow: 15.4 gpm (58.3 lpm) @2600 rpm

Drive Motors
- Model: Rexroth MCR 5
- Displacement: 50 in3/rev (820 cc/rev)

Pilot Controls (Joysticks)
- Model: Rexroth 08-351

Auxiliary Pump
- Make: Rexroth
- Type: Axial Piston, Variable Load Sense
- Displacement: 2.75 in3/rev (45 cc/rev)
- Max Flow: 30 gpm (113.6 lpm) @ 2600 rpm
- Relief pressure: 3000 psi (20,680 kPa)
- Marginal (Standby) Pressure: 218 psi (1,503 kPa)
- Cooling/filtering: Oil is filtered and cooled at all times. In auxiliary mode, the oil is filtered after the attachment to protect the machine if the attachment motor fails or contaminants are introduced from the quick couplers.

Lift Arm Control Valve
- Make: Rexroth
- Type: Load Sense

Oil Cooler
- Operating pressure: 150 psi (1034 kPa)
- Bypass relief pressure: 80 psi (689 kPa)
- Hot oil sending unit: 225°F (107.2°C)
- Avg. oil operating temp. 50-60°F above ambient. (High flow application 80°F above ambient.)

Critical Torque Specs
- Transmission Mounting Bolts
  - 85 ft-lb. w/Blue Loctite
- Drive Sprocket Drive Teeth Bolts
  - 88 ft-lb. -Dry
- Bogie Wheel (10” Idler) Retaining Bolt
  - 180 ft-lb. - w/Red Loctite
- 15” Idler Wheel Retaining Nut
  - 350 ft-lb. -Dry
- Drive Sprocket Lug Nut
  - 206 ft-lb. -Dry
- Drive Motor Mounting Bolts
  - 206 ft-lbs. -Dry

Cycle Times
- Lift-Arm up: 3.5 seconds (+/- .35 seconds)
- Lift-Arm Down: 3.3 seconds (+/- .33 seconds)
- Bucket Curl: 1.7 seconds (+/- .17 seconds)
- Bucket Dump: 1.9 seconds (+/- .19 seconds)

Service Tools
Listed below are common service tools which are identified and utilized in the service procedures described in this manual. Use tools recommended by ASV whenever possible to reduce risk of injury and or machine damage during service.

- ASV Jack Stands (2) (ASV P/N: 0402-900)
- Heavy Duty Hydraulic Jack (5-ton rating)
- Test Gauge Kit (ASV P/N: 0402-935)
- Ratchet Strap
- Long Pry Bar(s)
- ASV Service Cart (0402-871)

PREVIEW - YOUFIXTHIS.COM

Download full manual at youfixthis.com

3. Circuit Diagrams

Chapter Overview

This chapter contains diagrams for the following SR-70/80 circuits: hydraulic charge circuit, hydraulic auxiliary circuit, hydraulic drive circuit, loader valve, hydraulic pilot generation (solenoid) block and electrical attachment outlet. It also contains hose routing information for the control configurations for the drive and lift arm pilot controls.

Hydraulic Charge Circuit

Figure 3-1 SR-70/80 Hydraulic Charge Circuit

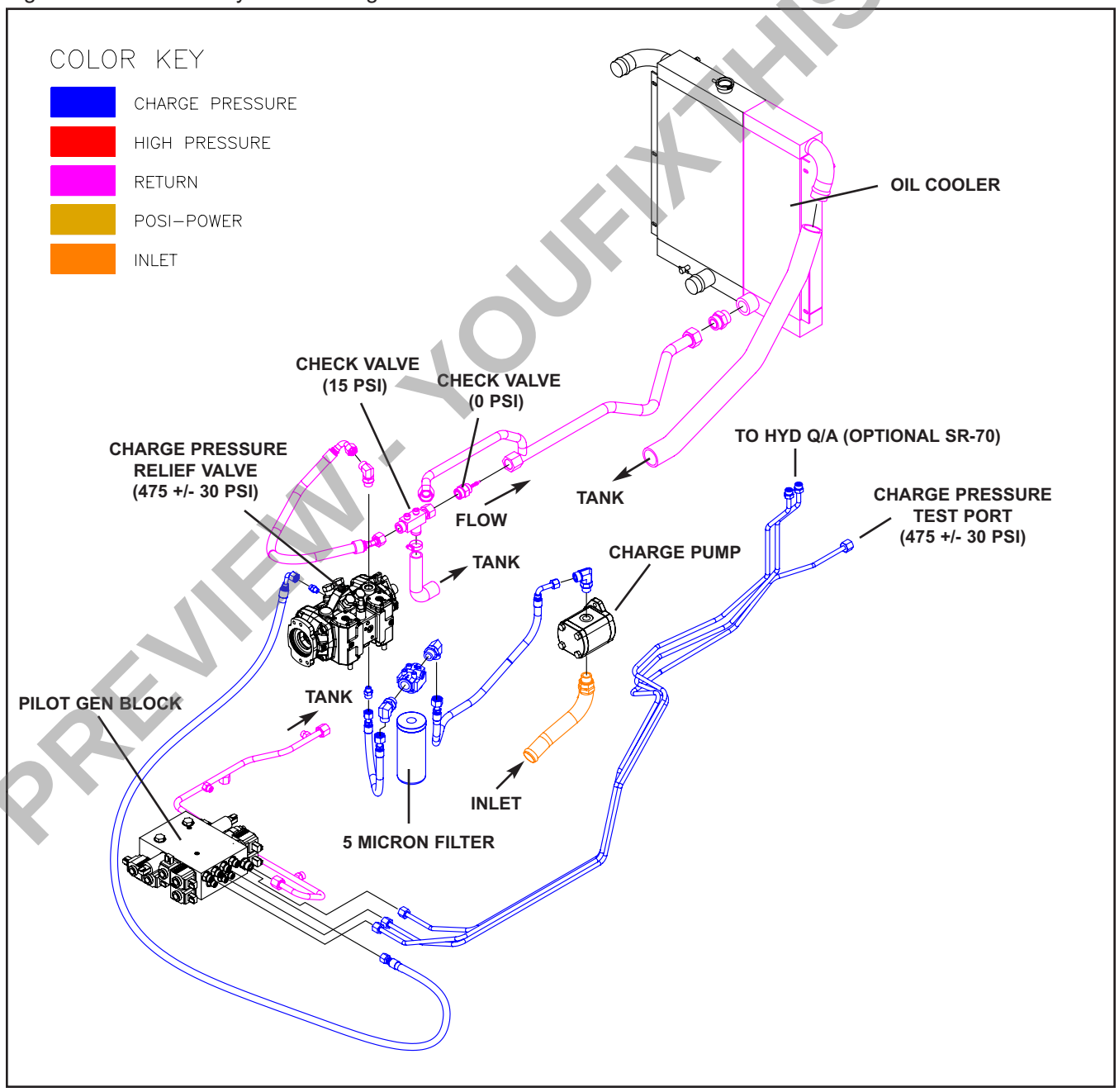

PREVIEW - YOUFIXTHIS.COM

Download full manual at youfixthis.com

4. Maintenance

Chapter Overview

This chapter provides information on general maintenance procedures for the SR-70/80. If there is an issue that requires troubleshooting, refer to Chapter 18, Troubleshooting.

Personal Safety

!WARNING!

Improper or incomplete maintenance/repair of a Rubber Track Loader can be dangerous and may result in machine damage, injury or even death.

Do not attempt to perform any type of repair or maintenance on a Rubber Track Loader until you have read and fully understood the information in this manual.

Refer to the Operation and Maintenance manual for instructions regarding proper machine operation techniques before operating any Rubber Track Loader.

Prior to performing any type of service work on a Rubber Track Loader, read and understand Chapter 1 (Product Safety) for personal safety information.



4-1



4-2

Lift Arm Brace

The lift arm brace (A) is intended to keep service personnel safe when it is necessary to work on a machine with the lift arms in the raised position. It is not safe to rely on the hydraulic system to hold the lift arms in the raised position just as it is not safe to crawl under a machine supported only by a jack. The lift arm brace is used to support the weight of the lift arms much like jack stands are used to mechanically support vehicle weight.

To install the lift arm brace:

1. Park the machine on level ground in a safe area for performing service work.
2. Remove any attachments that may be fastened to the quick attach.
3. Have an assistant remove the retaining pins (B) securing the lift arm brace and remove it from the machine.
4. Make sure bystanders are clear of the lift arms, then raise them to the upper limit.
5. Have an assistant Install the brace around the cylinder shaft as shown and reinstall the pins to secure it to the cylinder.
6. Lower the lift arms slowly until they come to rest on the brace.
7. It is now safe to shut the engine off and exit the machine.

!WARNING!

Do not work on or near the machine with the lift arms in the raised position unless the lift arm brace has been correctly installed.

To remove the lift arm brace:

1. Start the machine and raise the lift arms until they are clear of the brace.
2. Once clear, have an assistant remove the brace from the cylinder and stow it on the machine with the pins.
3. Once the brace has been stowed and the assistant is clear of the lift arms, lower the arms to the ground and shut the engine off to complete the procedure.

PREVIEW - YOUFIXTHIS.COM

Download full manual at youfixthis.com

18. Troubleshooting

Chapter Overview

This chapter contains basic troubleshooting procedures for the SR-70 and SR-80 Rubber Track Loaders.

Additional troubleshooting aids are provided in Chapter 3 (Circuit Diagrams) and in chapters containing disassembly and assembly procedures for the appropriate component or assembly.

Personal Safety

!WARNING!

Improper or incomplete maintenance/repair of a Rubber Track Loader can be dangerous and may result in machine damage, injury or even death.

Do not attempt to perform any type of repair or maintenance on a Rubber Track Loader until you have read and fully understood the information in this manual.

Refer to the Operation and Maintenance manual for instructions regarding proper machine operation techniques before operating any Rubber Track Loader.

Prior to performing any type of service work on a Rubber Track Loader, read and understand Chapter 1 (Product Safety) for personal safety information.

Visual Inspection

Prior to troubleshooting, walk around the machine and perform an overall visual inspection. Look for missing, loose, worn or broken parts. Pay particular attention to the following items:

- Track tension
- Fluid levels
- Fan belt tension and condition
- Hoses (no visible sign of wear)
- Fittings (no apparent leaks)
- Battery cables
- Fuse panel (fuses in place and operational)
- Controls (for neutral)

A simple visual inspection and operational check can identify many problems without the need for extensive troubleshooting. However, if these checks indicate a problem that requires further analysis, proceed to Troubleshooting.

General Troubleshooting

The most effective way to prevent a malfunction from occurring is to closely follow the recommended maintenance schedule and instructions throughout the life of the machine. However, if a malfunction does occur, finding the problem and fixing it quickly are important. This section covers a select set of symptoms that may occur and suggests possible causes.

Problem 1:
Machine will not crank over.

Possible causes

1. Continuous high flow switch activated.
2. Continuous low flow switch activated.
3. Power quick-attach switch in unlocked position. (if equipped)
4. Battery cables loose or corroded.
5. Ignition fuse blown.
6. Main starter fuse blown.
7. Starter relay malfunctioning.
8. Weak or dead battery.
9. Faulty continuous hydraulic flow switch.
10. Faulty power quick attach switch.
11. Faulty ignition switch.
12. Faulty starter.
13. Loose, broken or disconnected wiring at key, relay or starter.
14. Main power fuse (60-80 amp) blown.

PREVIEW - YOUFIXTHIS.COM
Download full manual at youfixthis.com

CAB ASSEMBLY (R.O.P.S. CANOPY) (Serial #: SSA/SSB 00101-Current)

REF. NO.	PART NUMBER	QTY.	DESCRIPTION
1	2045-291	1	DECAL LOGO ASV WHITE OUTLINE
2	2045-815	1	WINDOW REAR
3	0090-113	1	SEAL .125 OFFSET WINDOW LOCKING W/ZI
4	0090-114	1	SEAL FILLER STRIP
5	0201-748	1	ASSY,TAG,EMERGENCY EXIT
6	0201-742	2	BEZEL,RUBBER,LIGHT
7	2045-756	6	LIGHT 35W W/BEZEL
8	8102-040	20	CAPSCREW,HH,1/4-20 UNCx.75,GD8
9	8051-212	14	WASHER,SPRING LOCK,1/4,ZN
10	2045-544	1	SEAL REAR ACCESS
11	2045-730	1	WLMT BRACKET LIGHT
12	2045-817	8	PLUG FINISHING .5
13	2045-510	2	PLUG HOLE 1.375"
14	2045-541	1	COVER A/C REAR ACCESS
15	2045-542	1	SEAL A/C TOP ACCESS
16	8040-426	18	NUT,HEX,NYLOCK,5/16-18 UNC,ZN
17	2045-620	2	SHOCK LIFT CAB
18	2045-624	1	ROD PROP SLOTTED
19	0090-015	1	BOLT SHOULDER 3/8 x3 /8 GR 8
20	8102-134	5	CAPSCREW,HH,5/16-18UNCx1.25GD8
21	0310-231	2	NUT-U,10-32
22	2045-501	1	BASE LIGHT CAB
23	2045-500	1	LIGHT CAB
24	0090-014	2	SCREW FH PH #10-32 x .875
25	0201-482	2	PIN,1.00x2.88
26	2045-426	2	ASSY LIGHT
27	2045-428	4	ASSY LIGHT SINGLE
28	8011-137	4	BOLT,CARRIAGE,5/16-18 UNCx2.0,
29	8011-132	4	BOLT,CARRIAGE,5/16-18 UNCx1.0,
30	2045-427	2	BRKT MTG DUAL LIGHT
31	8050-277	4	WASHER,WROUGHT,3/8,SAE,ZN
32	8040-456	4	NUT,HEX,NYLOCK,5/16-24 UNF,ZN
33	8102-137	2	CAPSCREW,HH,5/16-18UNCx2.0 GD8
34	2045-727	1	DECAL CAUTION HOOD DAMAGE
35	2045-829	1	PLUG FINISHING 1.00
36	2045-536	1	PLUG FINISHING PLASTIC 2.500"
37	2045-701	2	FOAM SOUND
38	2045-700	1	FOAM SOUND
39	2045-958	1	ROPS SR SERIES
40	0300-546	1	CABLE,GROUND,ENGINE

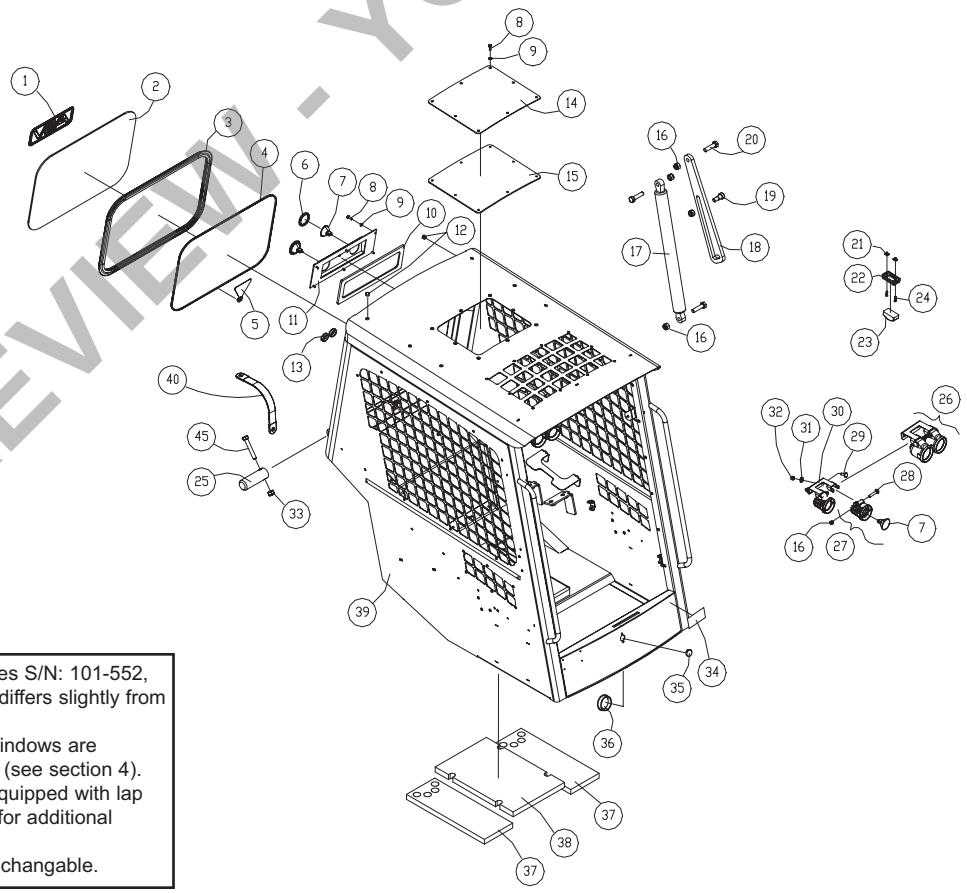

Note: On SSA machines S/N: 101-552, the ROPS (2045-545) differs slightly from current (2045-958).
- The side and roof windows are not interchangeable (see section 4).
- If your machine is equipped with lap bars, see section 2 for additional parts information.

All other items are intechangable.

PREVIEW - YOUFIXTHIS.COM

Download full manual at youfixthis.com

Table of Contents

1. Product Safety
- Chapter Overview 1-1
- Safety Messages 1-1
- Information Messages 1-1
- Basic Precautions 1-1
  - Safety Labels 1-1
  - Protective Equipment 1-2
  - Entering and Exiting 1-2
  - Lifting 1-2
  - Hot Fluids and Components 1-2
  - Corrosion Inhibitor 1-2
  - Batteries 1-2
  - Pressurized Items 1-2
- Repair 1-3
- Work Tools 1-3
- Asbestos Information 1-4
- Machine Labels and Decals 1-4
  - Product Identification Number 1-4
  - Engine Serial Number 1-4
  - Machine Label and Decal Examples 1-5

2. Technical Specifications
- Specifications (SR-80) 2-1
  - Engine 2-1
  - Transmission 2-1
    - Drive Pumps 2-1
    - Charge Pump 2-1
- Drive Motors 2-1
- Pilot Controls 2-1
- Auxiliary Pump 2-1
- Lift Arm Control Valve 2-1
- Oil Cooler 2-1
- Critical Torque Specifications 2-1
- Cycle Times 2-1
- Service Tools 2-1
- Specifications (SR-70) 2-2
  - Engine 2-2
  - Transmission 2-2
    - Drive Pumps 2-2
    - Charge Pump 2-2
- Drive Motors 2-2
- Pilot Controls 2-2
- Auxiliary Pump 2-2
- Lift Arm Control Valve 2-2
- Oil Cooler 2-2
- Critical Torque Specifications 2-2
- Cycle times 2-2
- Service Tools 2-2

3. Circuit Diagrams
- Chapter Overview 3-1
- Hydraulic Charge Circuit 3-1
- Hydraulic Auxiliary Circuit 3-2
- Hydraulic Drive Circuit 3-3
- Lift Arm Control Valve 3-4
- Hydraulic Pilot Generation Solenoid Block . . 3-5
- Electrical Attachment Outlet 3-6
- Drive Control (line routing) 3-7
- Lift Arm Control (line routing) 3-8

4. Maintenance
- Chapter Overview 4-1
- Personal Safety 4-1
- Lift-Arm Brace 4-1
- Tilt-up Cab 4-2
- Jacking Procedure 4-2
- Grease Fittings 4-3
- Undercarriages 4-3
- Track Tension 4-4
- Drive Sprocket Rollers 4-5
- Track Removal 4-6
- Track Installation 4-8
- Air Cleaner 4-10
- Fuel Filter 4-11
- Water Separator 4-11
- Accessory Belt Tension 4-12
- Fan Belt Removal/Installation 4-13
- A/C Belt Removal/Installation 4-13
- Engine Oil/FIlter Change 4-14
- Engine Oil Specifications 4-15
- Oil Level Check 4-15
- Hydraulic Fluid/Filter Change 4-16
- Radiator/Oil Cooler (cleaning) 4-17
- Engine (cleaning) 4-17
- Case Drain Filter 4-18
- Fuse Panel 4-18
- Maintenance Schedule 4-19

5. Machine Controls and Instrumentation
- Chapter Overview 5-1
- Machine Controls 5-1
- Loader Control 5-1
- Drive Control 5-1
- Throttle 5-1
- Instrumentation 5-1
- Switches 5-2

PREVIEW - YOUFIXTHIS.COM

Download full manual at youfixthis.com

1. Product Safety

Chapter Overview

This chapter contains product safety information for the SR-70/80 Rubber Track Loaders. Read and understand all product safety information before attempting to service any Rubber Track Loader.

Safety Messages

Safety messages are included in this document to serve as warnings of potentially dangerous conditions. Failure to follow their instructions could result in injury or death.

These messages are identified by the headings: **!DANGER!….!WARNING!….!CAUTION!.**

The messages are to be understood as: **Attention! Your Safety Is Involved!**

The information that follows each heading describes the potential hazard and the precautions necessary to protect yourself and others from injury. Instructions may be written or pictorially presented.

!DANGER!

This symbol is used to alert service personnel of an imminently hazardous situation that will result in serious injury or death.

!WARNING!

This symbol is used to alert service personnel of a potentially hazardous situation that could result in serious injury or death.

!CAUTION!

This symbol is used to alert service personnel of an unsafe practice that could result in injury.

Information Messages

Information messages are also included in this document to supplement the instructions and photographs in each chapter. These messages are identified by the labels **NOTICE** or **Note**.

NOTICE

This label is used to alert service personnel of a situation that could lead to equipment or machine damage.

Note: This label is used to provide important additional information, further explanation, comments or to stress the importance of a topic.

The person(s) in charge of servicing a Rubber Track Loader may be unfamiliar with many of the systems on the machine. This makes it especially important to use caution when performing service tasks. Familiarize yourself with the affected system(s) and components before attempting any type of maintenance or service.

It is not possible to anticipate every potential hazard. The safety messages included in this document and displayed on the machine are not all-inclusive. They are intended to make you aware of potential risks and encourage a safe approach to performing service work. If you use a tool, procedure, work method or operating technique that is not specifically recommended by ASV, you must satisfy yourself that it is safe for you and others. You must also ensure that the machine will not be damaged or be made unsafe by the operation, lubrication, maintenance or repair procedures that you choose.

Basic Precautions

!WARNING!

Improper or incomplete maintenance/repair of a Rubber Track Loader can be dangerous and may result in machine damage, injury or even death.

Do not attempt to perform any type of repair or maintenance on a Rubber Track Loader until you have read and fully understood the information in this manual.

Refer to the Operation and Maintenance manual for instructions regarding proper machine operation techniques before operating any Rubber Track Loader.

Following is a list of basic precautions that should always be observed.

Safety Labels

Safety labels are displayed in various places throughout the machine to serve as warnings of potentially dangerous conditions. Read and understand all "Safety" labels on any Rubber Track Loader before attempting to operate, maintain or repair it. Replace any damaged, illegible or missing labels as necessary.

PREVIEW - YOUFIXTHIS.COM

Download full manual at youfixthis.com

PREVIEW - YOUFIXTHIS.COM

Download full manual at youfixthis.com

8. Radiator and Oil Cooler

Chapter Overview

This chapter provides information on the disassembly and assembly of the radiator/oil cooler and associated components. If there is an issue that requires troubleshooting, refer to chapter 18, Troubleshooting.

Personal Safety

!WARNING!

Improper or incomplete maintenance/repair of a Rubber Track Loader can be dangerous and may result in machine damage, injury or even death.

Do not attempt to perform any type of repair or maintenance on a Rubber Track Loader until you have read and fully understood the information in this manual.

Refer to the Operation and Maintenance manual for instructions regarding proper machine operation techniques before operating any Rubber Track Loader.

Machine Preparation

!WARNING!

Accidental machine starting can cause injury or even death to personnel working on a Rubber Track Loader.

As a precaution, disconnect the battery cables from the battery terminals, tape the battery clamps and remove the key from the ignition switch prior to performing any service work on a Rubber Track Loader.

Place a "Do Not Operate" tag prominently on the machine to inform personnel that the machine is being worked on.

Prior to performing any type of service work on a Rubber Track Loader, read and understand Chapter 1 (Product Safety) for personal safety information.

Removal and Installation

Removal and installation procedures are provided for the following radiator/oil cooler components.

- Fan Guard
- Fan
- Fan Shroud
- Radiator/Oil Cooler

Note: Procedures are provided for only those radiator/oil cooler components listed above. However, exploded parts diagrams exist in the SR-70 and SR-80 Parts manuals to serve as visual aids in the assembly and disassembly of other system components.

Note: Refer to pages 3-1and 3-2 for pictorial views of the filtering and cooling system components.

Fan Guard

Removal

Required Tools
Combination Wrench Socket Wrench Socket Wrench Extension (optional)



1. Remove the air cleaner end cap and elements to provide clearance for guard removal. (fig. 1)

PREVIEW - YOUFIXTHIS.COM

Download full manual at youfixthis.com


16-8


16-9

11. Remove the seals and piston ring taking care not to scratch the piston. Also, pay close attention to seal and ring orientation and position to aid when installing new parts. (figures 16-8, 16-9)



16-10

12. Gently tap the end gland off of the cylinder rod. (figure 16-10)


16-11

13. Remove the tandem seals from the end gland paying close attention to the order of removal to aid during installation of the new seals. (fig. 16-11)


16-12

14. Remove the inner seal from the end gland. Pay attention to the seal orientation upon removal to aid during installation of the new seal. (fig. 16-12)

15. Remove the end gland outer seal from the end gland. (figure 16-10)

16. Thoroughly clean all parts to prevent contamination of hydraulic oil when reinstalled.

Assembly

1. Install new seals and components in place of the originals paying close attention to orientation and location to ensure proper operation.

2. Lubricate the piston, ring, and seals with fresh hydraulic oil prior to assembly to avoid damage.

3. Reassemble components by reversing the disassembly process.

Note: During reassembly, use an impact wrench to tighten the piston retaining lock nut. Make sure the nut is tight and that there is no independent movement between the piston and rod before reassembling.

PREVIEW - YOUFIXTHIS.COM
Download full manual at youfixthis.com

Filling The Bucket

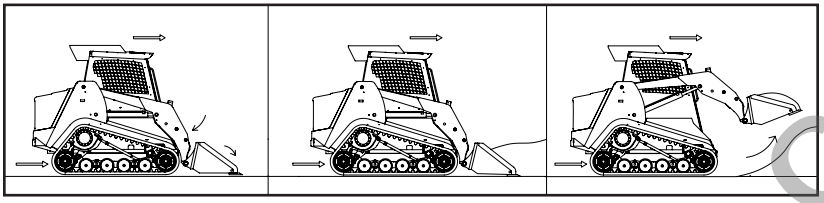

Steps: (see illustration)

1. Lower the lift arms until they rest on the frame.
2. Tilt the bucket slowly forward until the cutting edge engages the ground.
3. Drive the machine forward until the bucket is full of material.
4. Curl the bucket and raise the lift arms simultaneously to break the load free from the pile.
5. Maneuver the machine clear of the pile and then lower the lift arms, keeping the bucket curled upward, to approximately 10-12” above the ground for transporting.

Grading

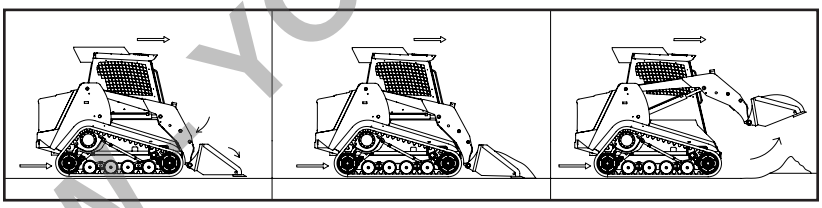

Steps: (see illustration)

1. Lower the lift arms until they rest on the frame.
2. Tilt the bucket slowly forward until the cutting edge engages the ground.
3. Drive the machine forward making slight bucket angle adjustments to vary cut depth as necessary.
4. When full, curl the bucket and raise the lift arms simultaneously. Once clear, lower them to approximately 10-12” above the ground for transporting.

CAUTION

Do not push or pull dirt as done in digging, grading, or leveling operations with the bucket tilted fully forward into the “Dump” position. This will stress the bucket cylinders and may damage them.

Download full manual at youfixthis.com

ENCLOSED CAB (OPTIONAL) (Serial #: SSA 00553-Current/SSB 101-Current)

REF. NO.	PART NUMBER	QTY.	DESCRIPTION
1	2045-965	1	WINDOW SLIDING LH
2	0305-011	20	CAPSCREW,HH,M6x1.0x20mm,ZN
3	8050-157	20	WASHER,WROUGHT,3/16,STD,ZN
4	2045-923	2	LATCH WINDOW
5	2045-966	1	ASSY WINDOW RH SR NON LATCH
6	2045-956	1	SEAL LOWER WINDOW LH
7	2045-955	1	PANEL LEXAN LOWER WINDOW
8	0090-092	12	SCREW TH PH 1/4-20 x .75 ZN
9	2045-957	1	SEAL LOWER WINDOW RH
10	0200-606	1	PANEL ROOF LEXAN
11	0200-607	1	SEAL PANEL ROOF
12	0090-109	10	SCREW TH PH 1/4-20 x 1.00 ZN

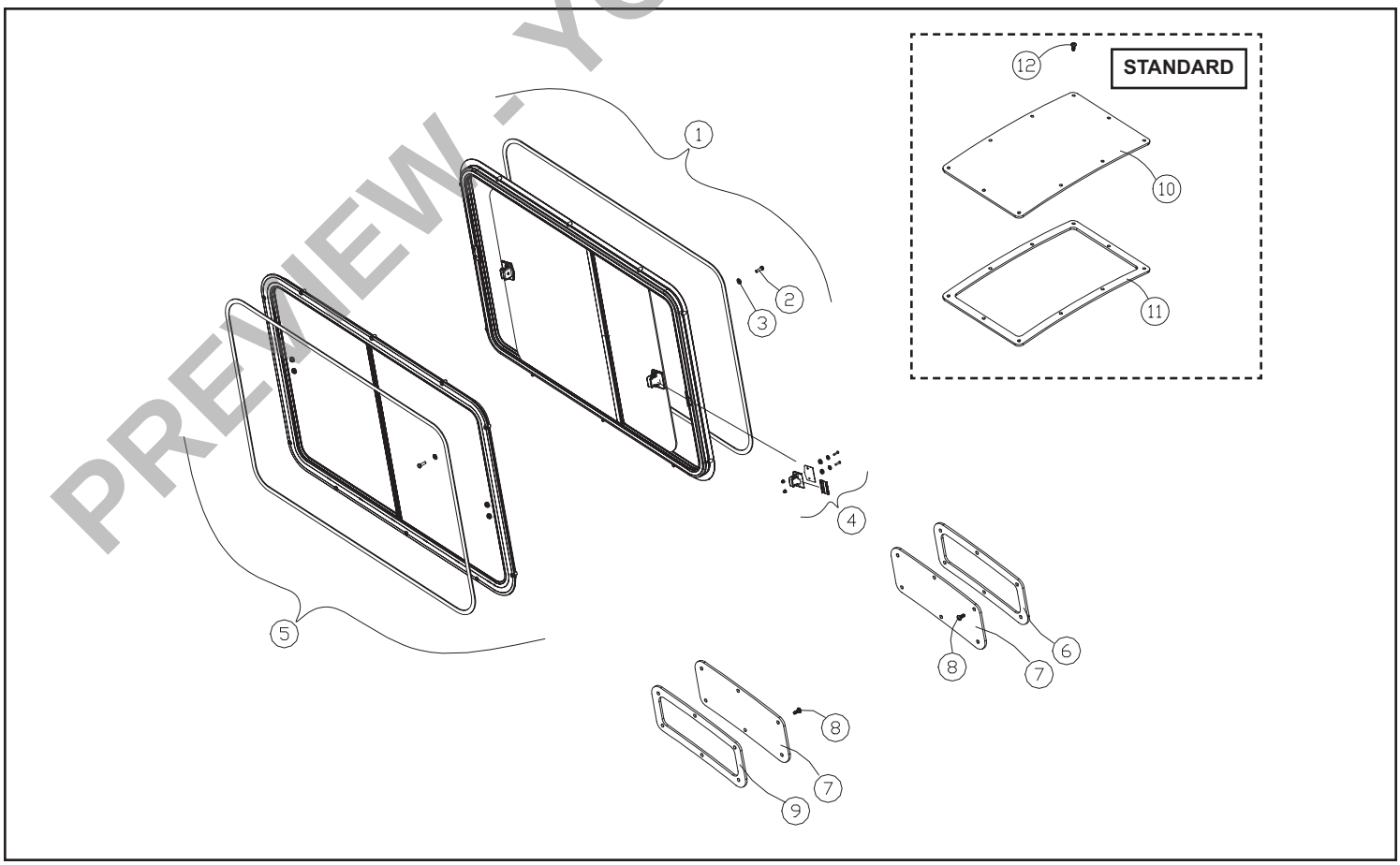

PREVIEW - YOUFIXTHIS.COM

Download full manual at youfixthis.com

PREVIEW ONLY

You're viewing 12 of 286 pages

The full manual includes:

- All 286 pages, complete
- Searchable PDF (find any keyword)
- No watermarks
- Instant download
- Print-ready quality

GET FULL MANUAL NOW

ASV SR-70, SR-80 Service Manual

Scan or click anywhere
youfixthis.com

Click anywhere on this page to get the full manual