Download full manual at youfixthis.com

SPECIFICATIONS

ENGINE

Manufacturer	BRIGGS & STRATTON	
Model/Spec	142302-019801	Model 600 (180)
	142301-019701	Model 600 (181)
	146402-014801	Model 650 (184)
	146401-014701	Model 650 (185)
	170402-013001	Model 750 (171)
	170401-013101	Model 750 (172)
	190401-013901	Model 853
	190417-090201	Model 855 (G-9)
	251417-015501	Model 1055 (G-10)
	252417-013201	Model 1155 (G-11)
Type	All Models	Horz. shaft, air cooled, 1 cyl., 4 cycle
Bore and Stroke	142302, 142301, 146402 & 146401	2-3/4 × 2-3/8
	170402 & 170401	3 × 2-3/8
	190401	3 × 2-3/4
Piston Displacement	142302, 142301, 146402, & 146401	14.1 Cu. In.
	170402 & 170401	16.79 Cu. In.
	190401	19.44 Cu. In.
Mfr's H.P. Rating	142302, 142301, 146402 & 146401	6 H.P. @ 3600 RPM
	170402 & 170401	7 H.P. @ 3600 RPM
	190401 & 190417	8 H.P. @ 3600 RPM
	251417	10 H.P. @ 3600 RPM
	252417	11 H.P. @ 3600 RPM
Crankshaft Extension	All Models	1.000/.9995 Dia × 2-29/32
Air Cleaner	All Models	Oil Bath or Oil Foam
Oil Capacity	All Models	2-3/4 pints
Gasoline Capacity	All Models	4 quarts
Governor	142302 & 142301	Air Vane
	146402, 146401, 170402, 170401, 190401, 190417, 251417 & 252417	Mechanical
Speed Control	All Models	Remote, cable operated
Spark Plug	All Models	Champion RCJ-8 or equivalent
Spark Plug Gap	All Models	.030
Point Gap	All Models	.020

PREVIEW - YOUFIXTHIS.COM

Download full manual at youfixthis.com

TROUBLE SHOOTING GUIDE

ELECTRIC START MODELS

PROBLEM	PROBABLE CAUSE	REMEDY
Starter Motor does not energize	1. P.T.O. engaged	1. Disengage P.T.O.
	2. Brake pedal not depressed or on 1225 transmission, not locked.	2. Depress brake pedal and lock, or lock transmission.
	3. Corroded or loose electrical connections	3. Clean and tighten
	4. Discharged battery	4. Locate problem and recharge
	5. P.T.O. interlock, brake interlock, seat interlock. Transmission interlock, ignition switch, not functioning.	5. Check and replace if necessary
	6. Solenoid not operating.	6. Check and replace if necessary
Starter Motor turns engine too slow	1. Weak or partially discharged battery.	1. Check battery charge or replace if necessary.
	2. Corroded or loose electrical connections.	2. Clean and tighten
	3. Starter sheave spins in belt.	3. Check belt tension. Adjust per manual.
Battery discharges rapidly	1. Low water level	1. Check and refill
	2. Low or no output from alternator	2. Check output and repair if necessary
	3. Short in electrical system	3. Check out and repair
Battery will not charge	1. Dirt and moisture on case	1. Clean case
	2. Corroded or loose battery terminals	2. Clean and tighten
	3. Battery not functioning properly.	3. Replace battery
	4. No alternator output	4. Check out alternator and repair or replace
	5. Regulator not functioning.	5. Check out regulator, replace if necessary
Lights not operating	1. Bulbs burned out	1. Replace bulbs
	2. Loose or poorly connected wire	2. Install properly and tighten
	3. Circuit breaker not functioning.	3. Check out circuit breaker, replace if necessary.

PREVIEW - YOUFIXTHIS.COM

Download full manual at youfixthis.com

WIRING DIAGRAM
G9 (855)
MAGNETO IGNITION

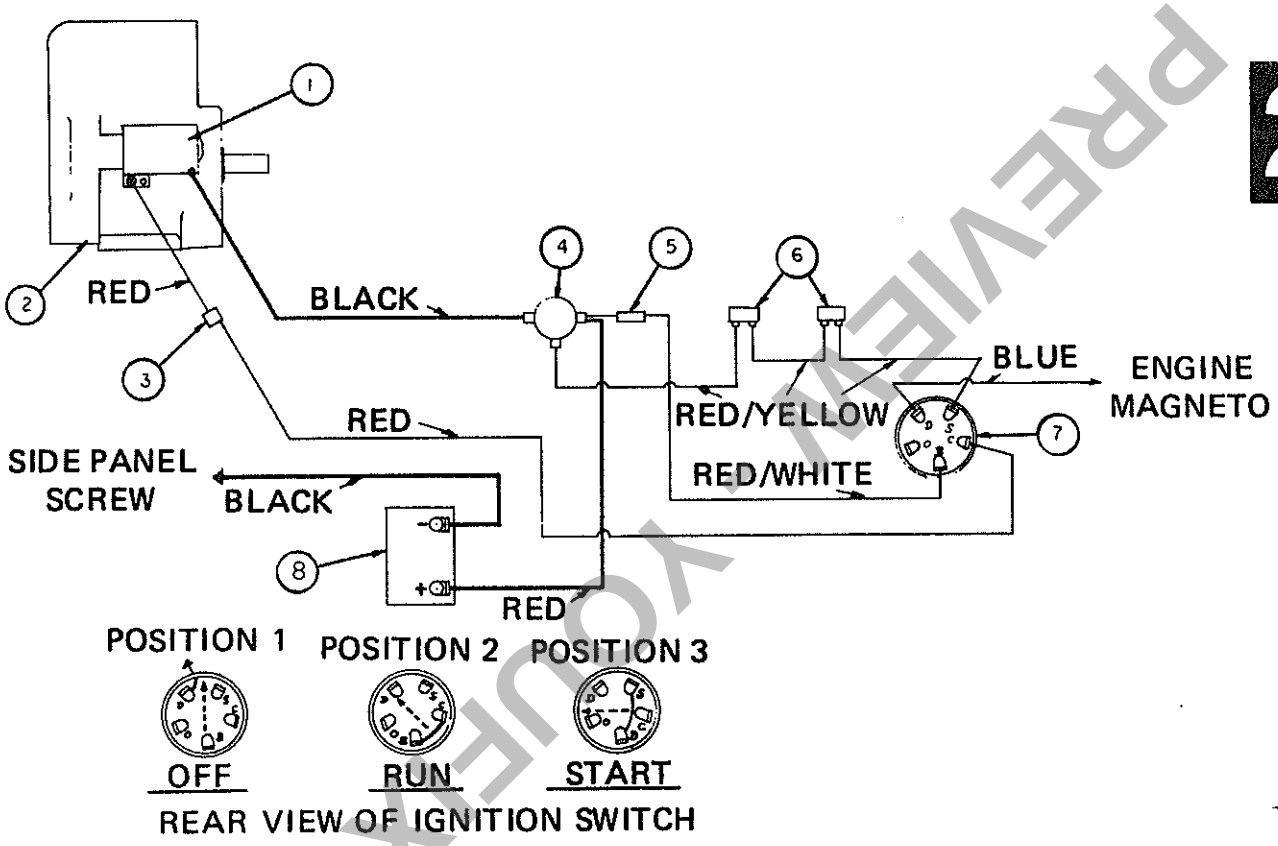

1. STARTER
2. ENGINE
3. CONNECTOR
4. SOLENOID
5. FUSE AND FUSE HOLDER
6. INTERLOCK SWITCHES
7. IGNITION SWITCH
8. BATTERY

PREVIEW YOUFIXTHIS.COM

Download full manual at youfixthis.com

TRANSMISSION ASSEMBLY (3 SPEED)

EXPLODED VIEW

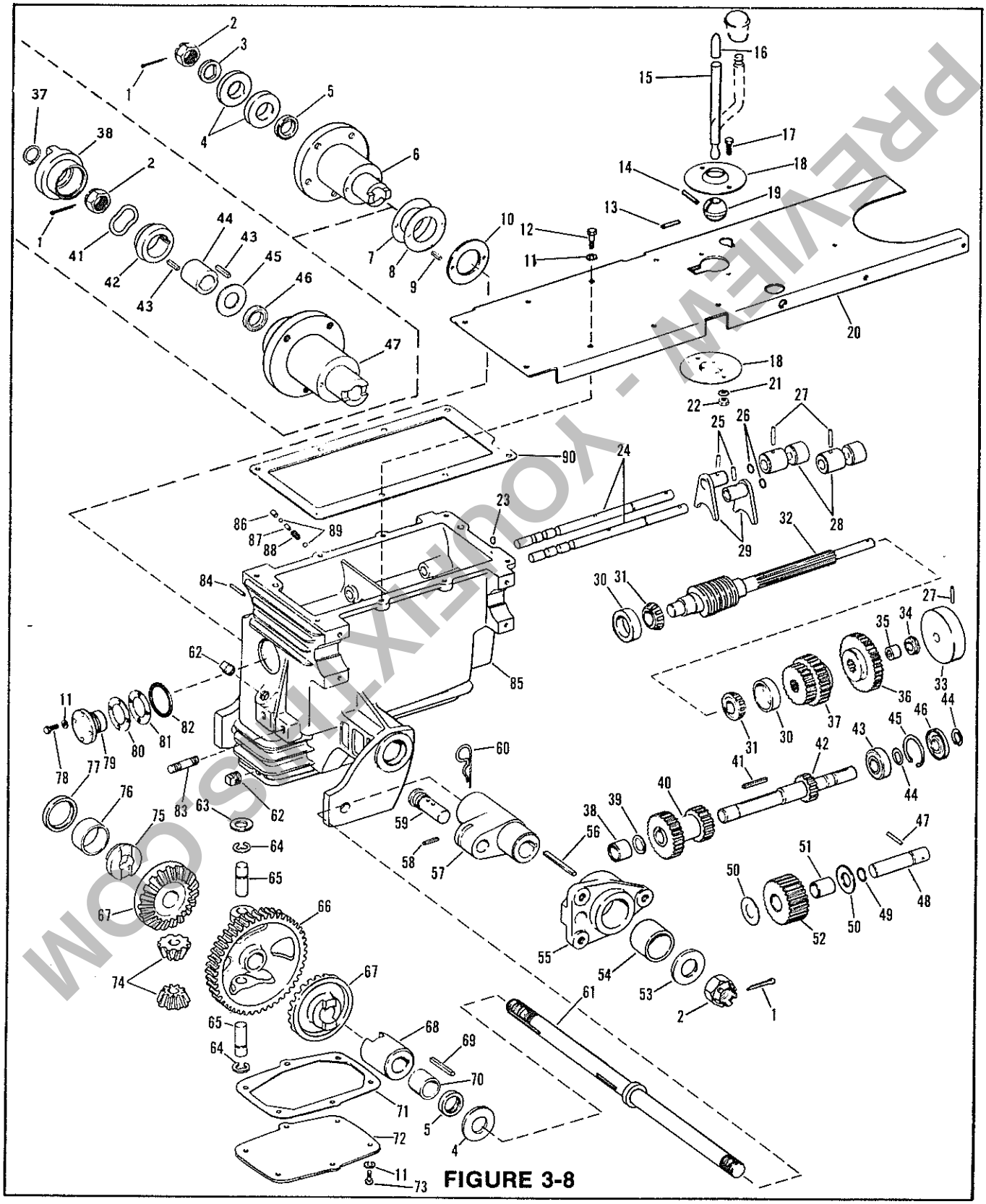

FIGURE 3-8

PREVIEW - YOUFIXTHIS.COM

Download full manual at youfixthis.com

TRANSMISSION ASSEMBLY PROCEDURE
(3 SPEED)

1. **REVERSE IDLER:** Liberally grease, then install O-Ring (1) into groove on Shaft (2). Insert Bronze Bearing (3) into Idler Gear (4). Position Idler Gear (4) (CHAMFERED TOOTH SECTION TOWARD FRONT) with a Thrust Washer (5) on each side, into cavity of Gear Case. Insert end of Shaft (2) through outer bore of Gear Case. Slide Shaft through Idler Gear (4) and into rear bore. Index exposed cross hole in Shaft (2) with pin hole in front end boss of Gear Case. Install Roll Pin (6).

2. **INPUT SHAFT:** Install Needle Bearing (7) into rear bore of Gear Case. Position Cluster Gear(8) into cavity of Gear Case. Install Key (9) into keyway on Input Shaft (10) and insert long end of Shaft through front bore of Gear Case, through Cluster Gear. Position complete assembly, so that Retaining Ring (11) may be installed to Shaft. Install Ball Bearing (12) over Shaft and into front bore of Gear Case. Install Retaining Ring (13), Retaining Ring (14), Oil Seal (15) and Retaining Ring (16) in that order.

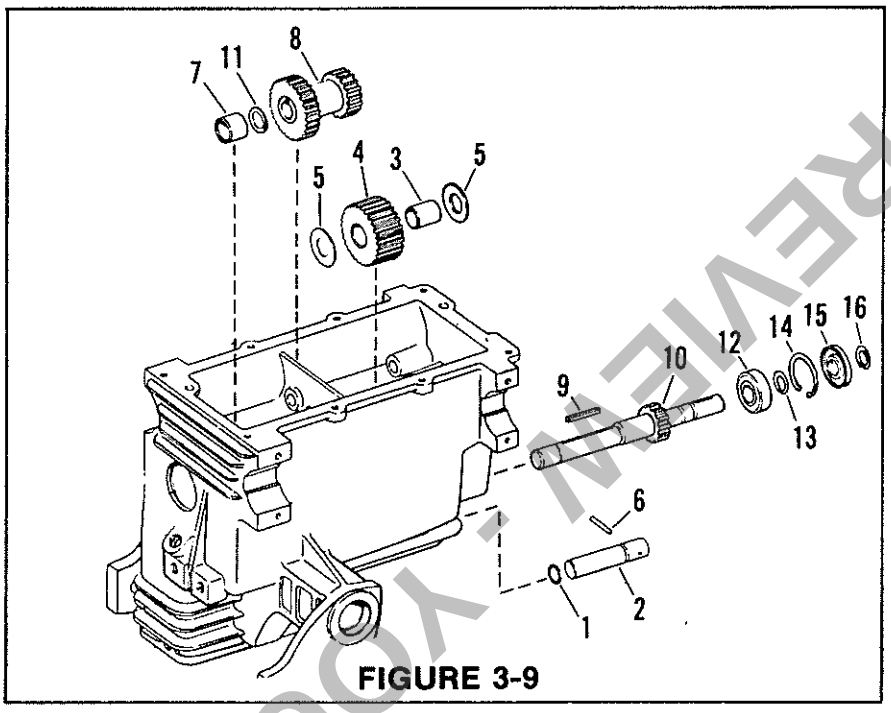

FIGURE 3-9

3. **AXLE SHAFT:** Install Timken Bearing Cup (17) into Gear Case divider wall (THIS STEP IS MORE DIFFICULT AFTER WORM WHEEL HAS BEEN INSTALLED). Install Bronze Bearing (18) into **left hand** Axle casting bore. Slide left hand end of Axle Shaft (19) through **right hand** Axle bore (ONLY PARTIALLY INTO CASE). Assemble differential with Bevel Pinions (20), Pinion Shafts (21), Worm Wheel (22), Washer (23) and Retaining Rings (24). Insert Drive Hub (25), Bevel Gear (26), Differential Assembly (22), Bevel Gear (27) and Coupling (28) into rear Gear Case cavity while threading Axle through the Assemblies to the left hand Bronze Bearing. Install Key (29) to Axle keyway and continue to slide Axle to the left to approximate fianl position. Slide Oil Seal (30) over Axle and install in **Left Hand** Axle bore. Install Oil Seal (31) into Axle bore.

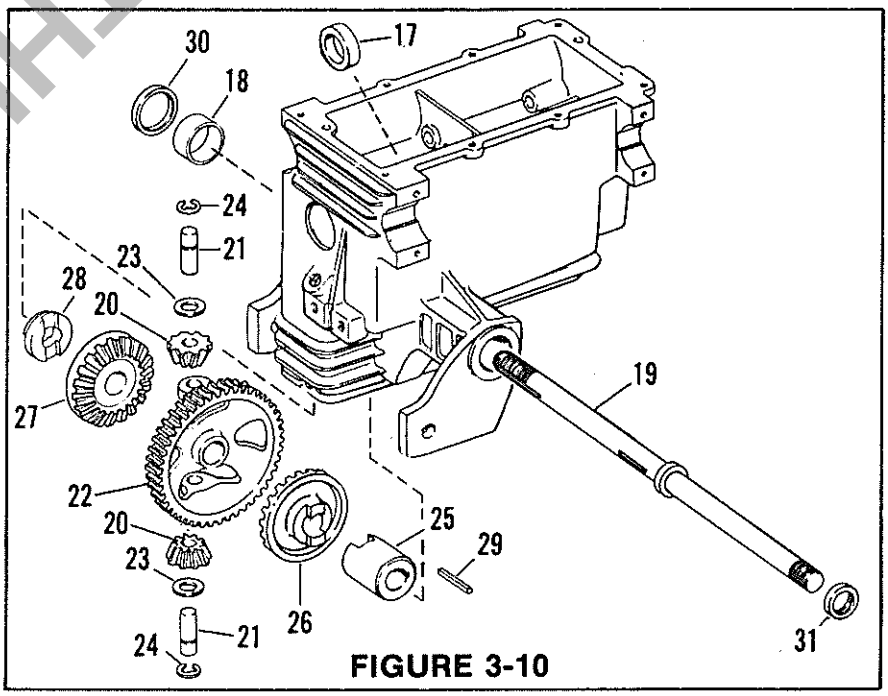

FIGURE 3-10

PREVIEW - YOUFIXTHIS.COM

Download full manual at youfixthis.com

HYDRAULIC SYSTEM (Continued)

PRINCIPLE OF OPERATION

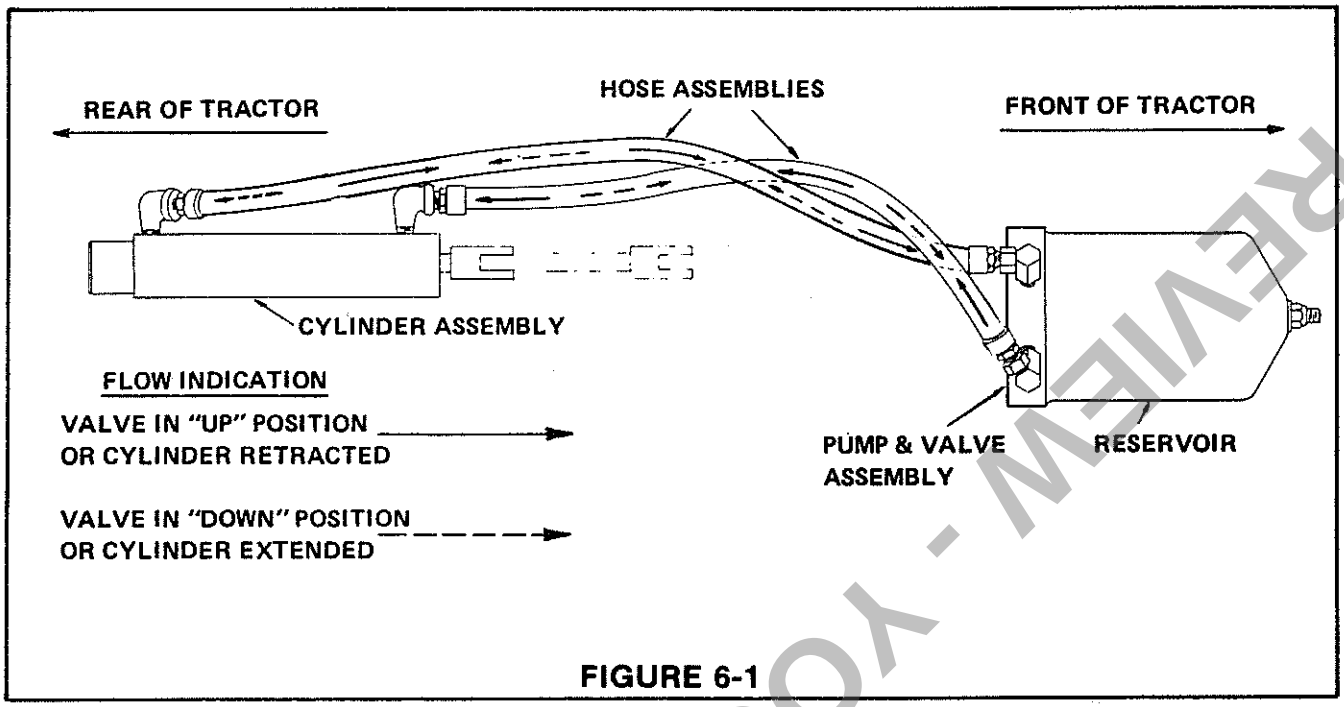

FIGURE 6-1

(OPTIONAL HYDRAULIC LIFT KIT)

When the control is actuated the oil flow can be directed to the hydraulic cylinder in either direction.

HYDRAULIC CYLINDER

To remove the piston rod assembly from the cylinder the Elbow fittings which go through the hole in the cylinder tube must be removed.

When the piston rod assembly is removed from the cylinder tube the cylinder head can be removed, and the Clevis, Guide, and related "O" rings and washers removed. All parts should be inspected and new "O" rings installed. "IMPORTANT" - grease "O" rings to prevent damage during assembly.

1 — Elbow
2 — Cylinder Head
3 — O-Ring
4 — Cylinder Tube
5 — Washer
6 — O-Ring
7 — Piston Rod Assembly
8 — O-Ring
9 — Guide
10 — O-Ring
11 — Clevis

Just ahead of the piston there is an area on the piston rod which is not ground. Grasp the piston rod in this area with a vise-grip pliers and hold the rod while turning the clevis off with a wrench.

IMPORTANT: CARE SHOULD BE TAKEN THAT THE POLISHED PORTION OF THE PISTON ROD IS NOT DAMAGED AT THIS TIME.

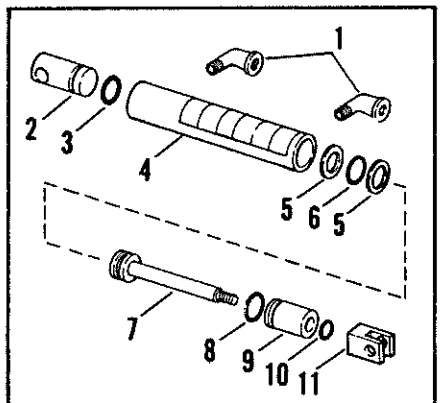

FIGURE 6-2

PREVIEW - YOUFIXTHIS.COM

Download full manual at youfixthis.com

MEDIUM TUBE FRAME TRACTORS

TABLE OF CONTENTS

	PAGE
GROUP I. GENERAL	1-1
SERIAL NUMBER INFORMATION	1-1
SPECIFICATIONS	1-2
MAINTENANCE CHART	1-7
LUBRICATION POINTS	1-8
LUBRICATION CHART (GEAR DRIVE)	1-9
LUBRICATION POINTS	1-10
LUBRICATION CHART (HYDROSTATIC DRIVE)	1-11
GROUP II. ELECTRICAL SYSTEM	2-1
TROUBLE SHOOTING GUIDE	2-1
WIRING DIAGRAM 600 (181), 800 (187), 900 (189) & 1000 (190) MAGNETO IGNITION	2-2
WIRING DIAGRAM 750 (172) MAGNETO IGNITION	2-3
WIRING DIAGRAM 650 (185), 850 (191), 1050 (192-01) MAGNETO IGNITION	2-4
WIRING DIAGRAM G9 (855) MAGNETO IGNITION	2-4A
WIRING DIAGRAM 850 (191-02) & 1050 (192-02) BATTERY IGNITION	2-5
WIRING DIAGRAM 853-01-02 MAGNETO IGNITION	2-6
WIRING DIAGRAM 853-03 MAGNETO IGNITION	2-7
WIRING DIAGRAM 1053 BATTERY IGNITION	2-8
WIRING DIAGRAM 1054 BATTERY IGNITION	2-9
WIRING DIAGRAM 1055 SOLID STATE IGNITION	2-10
WIRING DIAGRAM G10 (1055) w/BRIGGS & STRATTON ENGINE MAGNETO IGNITION	2-10A
WIRING DIAGRAM G11 (1155) w/BRIGGS & STRATTON ENGINE MAGNETO IGNITION	2-10B
WIRING DIAGRAM 1220 (193-01) SOLID STATE IGNITION	2-11
WIRING DIAGRAM 1225 (194-01) SOLID STATE IGNITION	2-12
WIRING DIAGRAM 1253 SOLID STATE IGNITION	2-13
WIRING DIAGRAM 1254 & 1256 SOLID STATE IGNITION	2-14
WIRING DIAGRAM G12 (1255) BATTERY IGNITION	2-14A
WIRING DIAGRAM 1257 SOLID STATE IGNITION	2-15
WIRING DIAGRAM 1556, G14 (1453), H14 (1456) H16 (1656) SOLID STATE IGNITION	2-16
DELCO-REMY GENERATORS	2-17
TESTING ELECTRICAL SYSTEM	2-18
GROUP III. DRIVE TRAIN	3-1
TROUBLE SHOOTING GUIDE	3-1
BEARING INSTALLATION TOOLS	3-2
OIL SEAL TOOLS	3-3
WORM CENTERING KIT NO. 171-9432	3-4
TRANSMISSION ASSEMBLY (3-SPEED)	3-7
TRANSMISSION ASSEMBLY (6-SPEED)	3-12
TRANSMISSION ASSEMBLY 3-SPEED GEAR DIAGRAM	3-18
TRANSMISSION ASSEMBLY 6-SPEED GEAR DIAGRAM	3-22
REMOVAL AND INSTALLATION OF HYDROSTATIC PACKAGE	3-27
MODEL "10" HYDROSTATIC REPAIR	3-28
TRANSAXLE ASSEMBLY	3-30
GROUP IV. FUEL SYSTEM	4-1
TROUBLE SHOOTING GUIDE	4-1
FUEL TANK AND VALVE	4-2
FUEL FILTER	4-3
AIR CLEANER	4-3
CARBURETOR ADJUSTMENTS	4-4
GROUP V. CHASSIS	5-1
STEERING ASSEMBLY	5-1
CLUTCH ASSEMBLY (6-SPEED TRANSMISSION)	5-2
CLUTCH ASSEMBLY (3-SPEED TRANSMISSION)	5-4
CLUTCH ASSEMBLY (3-SPEED TRANSMISSION, OLDER MODELS)	5-5
BELT GUIDE ADJUSTMENTS	5-6
TRAVEL PEDAL ADJUSTMENT (HYDRO MODELS)	5-8
HYDROSTATIC NEUTRAL ADJUSTMENT	5-9
BRAKE ASSEMBLY	5-10
PARKING BRAKE	5-11
DISC BRAKE	5-12
BRAKE INTERLOCK SWITCH	5-13
P.T.O. INTERLOCK SWITCH	5-14
DRIVE BELTS	5-15
P.T.O. BELTS	5-15
STARTER - GENERATOR DRIVE BELT	5-15
P.T.O. SHAFT AND SEAL	5-16
GROUP VI. HYDRAULIC SYSTEM	6-1
TROUBLE SHOOTING GUIDE	6-1
PRINCIPLE OF OPERATION	6-2
HYDRAULIC POWER LIFT	6-4
HYDRAULIC LIFT KIT	6-5
TRANSMISSION FILTERS	6-6
GROUP VII. ENGINE	7-1
TROUBLE SHOOTING GUIDE	7-1
ENGINE REMOVAL	7-3
GROUP VIII. SERVICE LETTERS/ BULLETINS	8-1

PREVIEW YOUFIXTHIS.COM

PREVIEW ONLY

You're viewing 7 of 100 pages

The full manual includes:

- All 100 pages, complete
- Searchable PDF (find any keyword)
- No watermarks
- Instant download
- Print-ready quality

GET FULL MANUAL NOW

Bolens 600, 650, 750, 800, 850, 853, 855, 900, 1000, 1050, 1053, 1054, 1055, 1155, 1220, 1225, 1253, 1254, 1255, 1256, 1257, 1453, 1456, 1556, 1656, 855 (G-9), 1055 (G-10), 1155 (G-11), 1255 (G-12), 1453 (G-14), 1456 (H-14), 1656 (H-16) Service and Repair Manual

Scan or click anywhere
youfixthis.com

Click anywhere on this page to get the full manual