3 SPECIFICATIONS

Items \ Models		TX2160 F-HST (4WD)		TX2160T-HST (2WD)	
Tire	Front (Dia./mm)	5.00-12 (ϕ581)	20.5 x 8.00-10 (ϕ526)		20 x 8.00-10 (ϕ495)
	Rear (Dia./mm)	8-18 (ϕ840)	29 x 12.00-15 (ϕ757)		29 x 12.00-15 (ϕ757)
Dimensions [cm (in)]					
Overall length		208 (81.9)	204 (80.3)		204 (80.3)
Overall width		100 (39.4)	112 (44.1)		112 (44.1)
Overall height		171 (67.3)	168 (66.1)		167 (65.7)
Whell base		137.5 (54.1)	137.5 (54.1)		137.5 (54.1)
Tread	Front	76.5 (30.1)	87 (34.3)		77 (30.3)
	Rear	80, 91 (31.5, 35,8)	82, 89 (32.3, 35.0)		82, 89 (32.3, 35.0)
Min. ground clearance		25 (9.8)	22 (8.7)		30 (11.8)
Min. turning radius (with brake)		220 (86.6)	225 (88.6)		200 (78.7)
Weight [kg] (lbs)		580 (1279)	575 (1268)		535 (1179)

Engine	
Model	K3B
Type	Water Cooled, 4-cycle 3 cylinder Diesel Engine
Output [ps/rpm]	15.5/2600 (11.4 Kw/2600 rpm)
Max. Torque (kg-m/rpm)	4.8/1800 (34.7 lb.Ft)
Displacement [lit.]	0.849 (51.81 Cu, in)
Bore x Stroke [mm]	68 x 78 (2.68 x 3.07 in)
Combustion chamber	Swirl chamber
Fuel Type	JIS No. 2 Diesel fuel (JIS No. 3 Diesel fuel in very cold weather)
Fuel injection pump	Bosch M type ND-PER3M
Fuel injection nozzle	Throttle type ND-DN4SD24
Injection pressure	120 kg/cm^2 (12MPa)
Cooling system	Pressurized radiator 0.9 Kg/cm^2 (0.09 MPa)
Lubricating system	Forced circulation by Trochoid Pump
Oil	Class C C or C D oil, Above 20°C ... SAE 30 or 10W-30 5 - 20°C ... SAE 20 or 10W-30 Below 5°C .... SAE 10W - 30
Starting method	Starter motor (with glow plug), 1.6 kW -12 V
Battery	NS60 (12V - 45AH)
Alternator	AH2035M4, 12 V - 35 A
Air cleaner	Dry

Chassis	
Clutch	Dry, Single disc
Transmission	Hydrostatic Transmission (HST), High-Low gear shift
Differencial gear	Bevel gear type with dif-lock
Brake	Mechanical, internal expanding type
Steering	Ball screw type
Front axle	Center pin joint type Center pin Lemoine Type
Rear axle	Central axle type

PREVIEW - YOUFIXTHIS.COM

Download full manual at youfixthis.com

Separation of the Clutch Housing and the Front Transmission (Spacer)

1) Drain the transmission oil.
2) Remove the straight adapter of color indicator from the oil filter, then take off the cover, seat, fender, side cover, and so forth (Fig. 3).

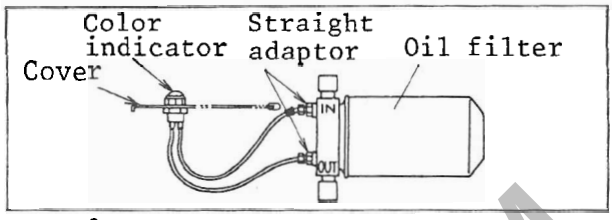

Fig. 3

3) Remove the springs under the steps, then take off the right and left steps.

   * Remove the right step (14) together with the foot pedal (15) (Fig. 4).

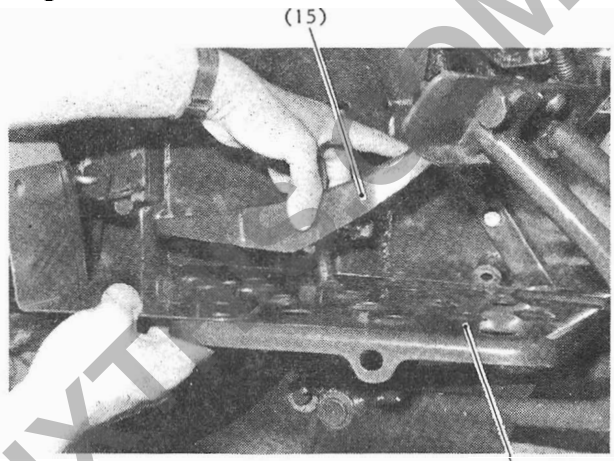

Fig. 4

4) Detach the connection before the brake and drag rods.

5) Remove the connecting nut of delivery pipes (A) and (B) (22) Fig. 9).

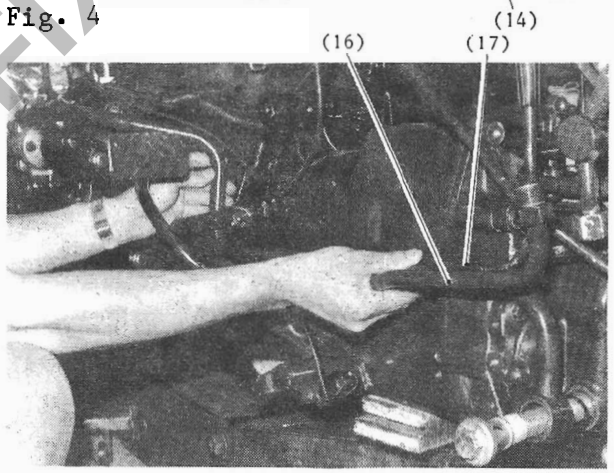

Fig. 5

6) Remove the cooler pipe (L) (16) and the suction pipe (Main) (17) (Fig. 5).

   * Removing the rear tire (L) makes the job easier.

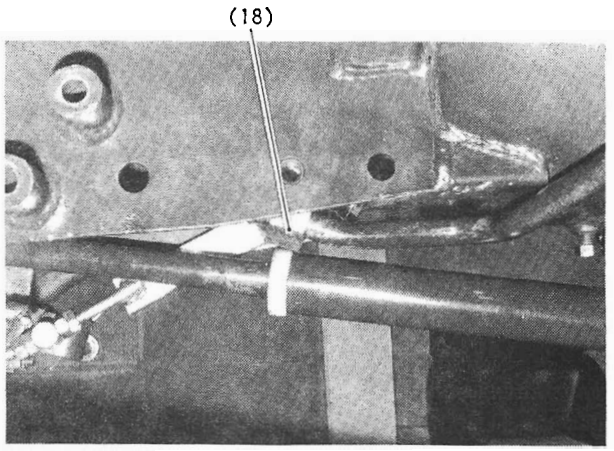

Fig. 6

7) Disconnect the connecting nut (18) between the cooler pipe (R) and the boost pipe. (Fig, 6).

PREVIEW - YOUFIXTHIS.COM

Download full manual at youfixthis.com

2) Wiring diagram (for E30 series)

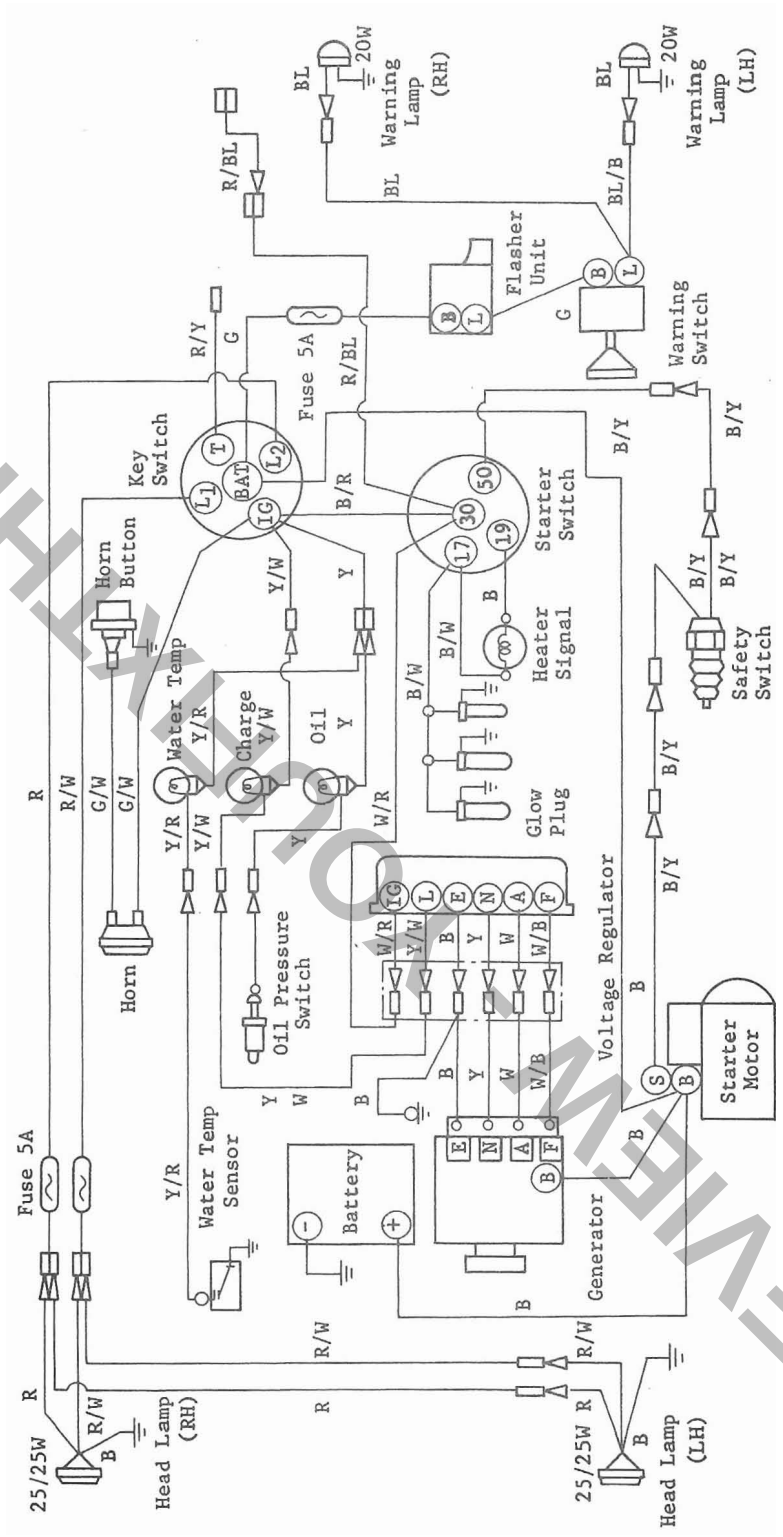

Fig. 10

PREVIEW ONLY THIS.COM
Download full manual at youfixthis.com

2. TIGHTENING TORQUE

2.1 Engine

Description	Tightening torque (kg-m)
Cylinder head bolt ┌M12 bolts 8	11 to 12
└M10 bolts 3	7 to 8
Cranck pulley nut	20 to 25
Main bearing cap bolt	5 to 5.5
Connecting rod cap nut	3.2 to 3.5
Flywheel mounting bolt (8T)	11.5 to 12.5
Oil pan drain plug	5 to 6
Oil filter	1.1 to 1.3
Fuel injection pump	
Delivery valve holder	4 to 5
Nozzle holder	
Holder mounting bolt	1.5 to 2
Holder body and retaining nut	6 to 8
Glow pug	1.5 to 2
Standard bolts and nuts	
M6	0.7
M8	1.7
M10	3.5
M12	6.4

2.2 Other standard bolts and nuts

	Tightening Torque: (kg-cm)	
	4T Bolts and Nuts	9T Bolts and Nuts 7T Bolts and Nuts
M 5	30-40	60-70
M 6	60-80	100-130
M 8	130-180	250-350
M10	200-300	550-700
M12	500-600	900-1100
M14	700-800	1300-1500
M16	1000-1200	1600-1800
M18	1200-1400	2000-2400
M20	1500-1700	2500-2600

PREVIEW - YOUFIXTHIS.COM

Download full manual at youfixthis.com

3. MAINTENANCE CHART

○ Inspection, replenishment and adjustment
● Replacement
△ Cleaning and washing

	Items	Dailey	Periodic inspection and Operation hour (hour meter counter)												Inspection	Check standard at preliminary check
			50	100	150	200	250	300	350	400	450	500	550	600		
Engine	Engine oil	○	●		●		●		●		●		●		Replace every 100 hours	Within level gauge
	Air cleaner			△		△		△		●		△		△	Clean every 100 hours Replace every 400 hours	
	Radiator coolant	○													Replace every year	Filled up to pressure cap (not clogged)
	Fuel	○														Full level
	Fuel filter			○	△	○	△	●	○	△	○	△	○	●	Clean every 100 hours Replace element every 300 hours	
	Cleaning inside the fuel tank														Do every year	
	Fan belt	○	○				○				○				Check every 200 hours	10 mm can be pressed down with finger
	Electrolyte level	○		○		○		○		○		○		○	Inspect every 100 hours	
	Oil filter		●		●		●		●		●		●		Replace every 100 hours	
	Tightening of bolts and nuts	○	○													Tightened securely
	Damage and leaks	○													Change part	No damage or leaks
	Valve clearance adjustment		○								○				Adjust every 400 hours	0.35 mm (cooled)
	Engine idling adjustment		○													
	Nozzle injection starting pressure		○													Injection start pressure: 120 kg/cm^2
	Nozzle					○				○				○	Check every 200 hours	
	Starter, alternator & regulator									○					Adjust every 400 hours	
	Glow plug									○					Check every 400 hours	Disconnection check
	Compression pressure														Check every 800 hours	26 kg/cm^2/280 rpm
Chassis	Transmission gear oil		●		○		●		○		●		○		Inspect every 100 hours Replace every 200 hours	
	Play of clutch pedal	○														
	Play of brake pedal	○														
	Efficiency of brake	○														
	Working of levers	○														
	Cartridge filter		●				●				●				Replace every 200 hours	Replace if the filter sensor indicator turns red
	Suction filter (main)		△				△				△				Clean every 200 hours	
	Suction filter (HST)A		△				△				△				Clean every 200 hours	
	Suction filter (HST)B		△				△				△				Clean every 200 hours	
	Play of steering wheel	○														
	Tire pressure 2WD	○														
	4WD	○														
	Toe-in							○						○		2-4 m/m
	Greasing front wheel hub (2-wheel drive)														Do every 900 hours	
	Retightening front wheel bearing (2-wheel dirve)														Do every 900 hours	
	Bevel case lubrication (4-wheel drive)							●						○		
	Gear case lubrication (4-wheel drive)							●						●		
	Retightning steering ball joint							○						○	Adjust each 300 hours	
	Wheel claping bolt	○														Tightened securely
	Electric apparatus	○														Proper operation
	Adjustment of throttle							○						○	Adjust each 300 hours	
	Clamping of bolts and nuts	○														Tightened securely
	Oil leakage of clutch														Inspect every year by removing plug on the bottom clutch chamber.	
	Grease-up		○	○	○	○	○	○	○	○	○	○	○	○	Replenish each 50 hours	
	Cheak from gear case for entering of muddy water														After pudding, check by removing check plug at front gear case	
	Cleaning of the magnet drain plug		△				△				△				Clean every 200 hours	

PREVIEW - YOUFIXTHIS.COM

Download full manual at youfixthis.com

CONTENTS

CHAPTER I GENERAL INFORMATION I-1

1 INTRODUCTION I-1
2 EXTERNAL VIEW I-2
3 SPECIFICATIONS I-4
4 POWER TRAIN DIAGRAM I-7
5 ASSEMBLY DRAWINGS OF THE POWER TRAIN I-8
1) 4WD model I-8
2) 2WD model I-9

CHAPTER II DISASSEMBLY AND REASSEMBLY. II-1

1 GENERAL PRECAUTION FOR DIASSEMBLY AND REASSEMBLY OPERATIONS II-1
2 OPERATION CHART FOR DISASSEMBLY AND REASSEMBLY II-4
3 DISASSEMBLY AND REASSEMBLY OF FRONT TRANSMISSION . . . II-5
3-1 Separation of Clutch Housing and the Front Transmission II-6
3-2 Removal of the HST Unit II-8
3-3 Separation of Sapcer, and the Front and Rear Transmission II-9
3-4 Disassembly of Front Transmission. II-10
3-5 Check points for reassembly. II-12
4 HST CONTROL ADJUSTMENT II-15

CHAPTER III HST CONSTRUCTION AND HANDING III-1

1 GENERAL DESCRIPTION III-2
2 CONSTRUCTION AND OPERATION III-3
2-1 Functioning of Variable type pump and fixed type motor III-3
2-2 Charging Pump and Boost Circuit III-4
2-3 Neutral Mechanism III-5
2-4 Forward Mechanism III-6
2-5 Reverse Mechanism III-7
3 CIRCUIT FLOW DIAGRAM III-8
4 CHECK POINTS AND PRECAUTIONS III-9
5 TROUBLESHOOTING III-11

CHAPTER IV ELECTRIC SYSTEM IV-1

WIRING DIAGRAM IV-1

CHAPTER V SERVICE STANDARDS & OTHER INFORMATION V-1

1 SERVICE STANDARDS V-1
1-1 Engine Proper V-1
1-2 Chassis V-5
1-3 Special tools for engine V-7
2 TIGHTENING TORQUE V-8
3 MAINTENANCE CHART V-9
4 LUBRICANTS AND CAPACITIES V-11

APPENDIX A-1

1 REFERENCE DRAWING FOR ATTACHMENT INSTALLATION A-1
2 DRAWIMG OF FRPMT P.T.O UNITS (OPTION) A-3
3 PIPING SYSTEM A-5

PREVIEW - YOUFIXTHIS.COM

Download full manual at youfixthis.com

2. EXTERNAL VIEW

2.1 4-WD TRACTOR

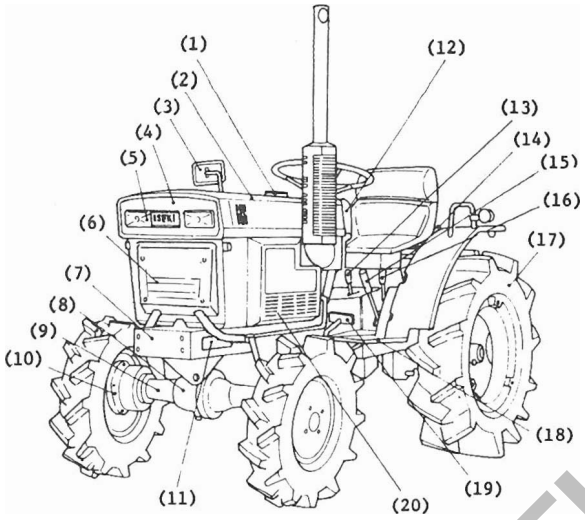

1) Fuel tank cap
2) Engine hood
3) Rear view mirror
4) Light grill
5) Head light
6) Grill
7) Front frame
8) Bevel gear case
9) Axle housing
10) Front gear case
11) Body no.
12) Meter panel
13) Auxiliary speed change lever
14) Lift arm
15) PTO speed change lever
16) 4WD lever
17) Rear wheel
18) Step
19) Clutch pedal
20) Engine no.
21) Hydraulic lift control lever
22) Arm rest
23) Turn signal light
24) Fender
25) HST lever
26) Dif-lock pedal
27) HST pedal
28) Brake pedals
29) Driver's seat
30) Throttle lever
31) Steering wheel
32) Muffler
33) Front whell
34) Dip-stick (Engine)
35) Suction filter (HST) (B)
36) Cooler pipe(R)

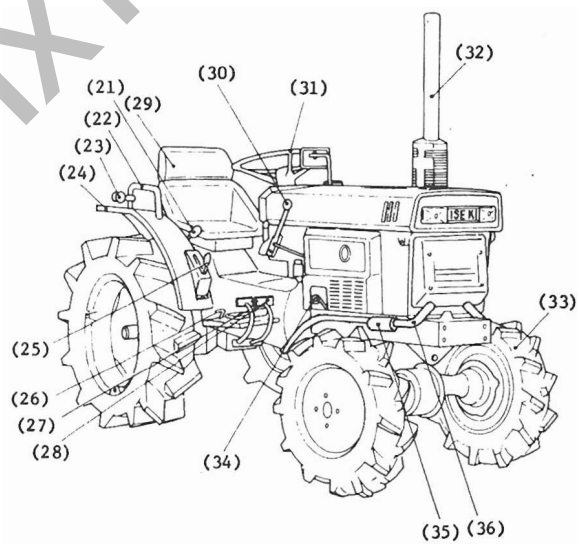

PREVIEW - YOUFIXTHIS.COM

Download full manual at youfixthis.com

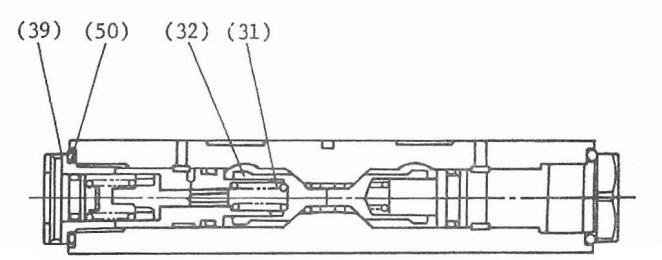

I-I cross-section

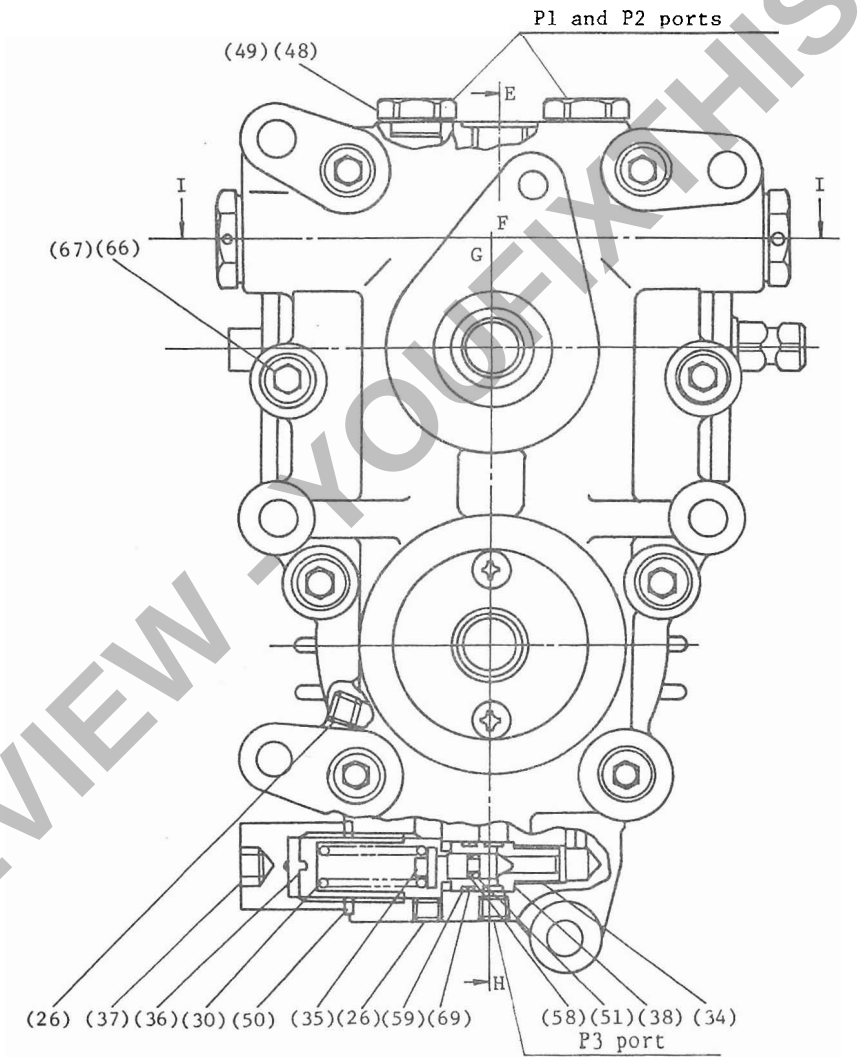

FIG. 1A

III - 1A

PREVIEW - YOUFIXTHIS.COM

Download full manual at youfixthis.com

PREVIEW ONLY

You're viewing 8 of 58 pages

The full manual includes:

- All 58 pages, complete
- Searchable PDF (find any keyword)
- No watermarks
- Instant download
- Print-ready quality

GET FULL MANUAL NOW

Bolens 1502H, 1704H, TX 1502, TX1704, TX2160, TX2160 F-HST, TX2160T-HST Repair Manual

Scan or click anywhere
youfixthis.com

Click anywhere on this page to get the full manual