3.1 View of operating console left, middle, right

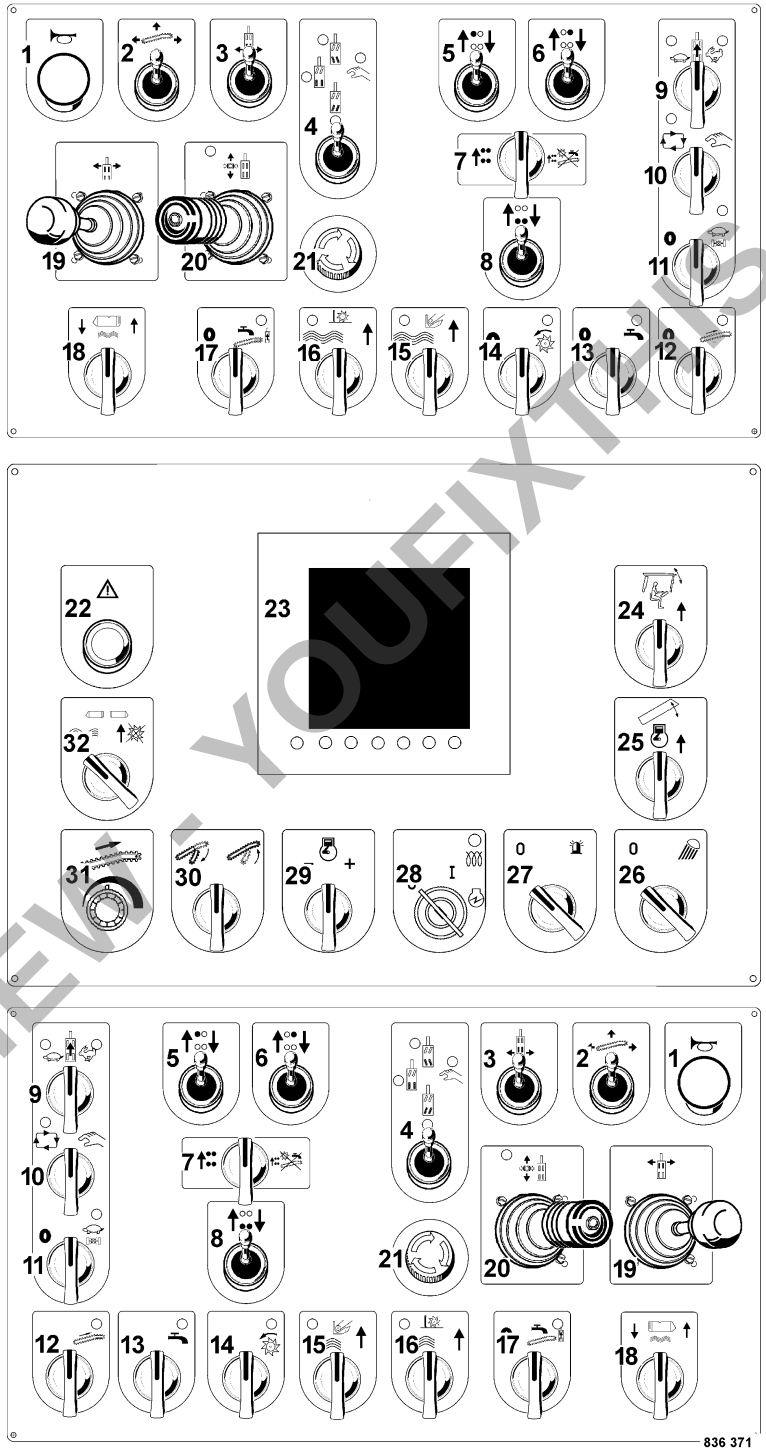

Fig. 23

PREVIEW - YOUFIXTHIS.COM

Download full manual at youfixthis.com

4.1 General notes

Please read section 3 Indicators and Control Elements thoroughly before operating the machine if you are not yet fully familiar with the indicators and control elements of the machine.

All indicators and control elements are described in detail in this chapter.

4.2 Tests before taking into operation

The following inspections must be carried out before each working day or before a longer working period.

⚠ Danger

Danger of accident!

Please observe strictly the safety regulations in chapter 2 of this instruction manual!

- Park the machine on ground as level as possible or adjust it horizontally.

Check:

- fuel tank and fuel lines for leaks
- screw joints for tight fit
- function of steering
- machine for cleanliness, damage
- Presence of the appropriate operating and maintenance instructions
- check whether the machine has been properly serviced
- leakages on transmissions and hydraulic components
- function of emergency stop,

⚠ Caution

If leakages are found on transmissions or hydraulic components check the oil level, replenish oil if necessary.
Have leaks sealed as quickly as possible.

i Note

For a description of the following tasks refer to the chapter "maintenance every 10 operating hours".

- Engine oil level
- Check the hydraulic oil level, top up if necessary.
- Check the coolant level, top up if necessary.

⚠ Danger

Fire hazard!

PREVIEW - YOUFIXTHIS.COM

Download full manual at youfixthis.com

5.1 General notes on maintenance

When performing maintenance work always comply with the appropriate safety regulations.

Thorough maintenance of the machine guarantees far longer safe functioning of the machine and prolongs the lifetime of important components. The effort needed for this work is only little compared with the problems that may arise when not observing this rule.

The terms right/left correspond with travel direction forward.

- Always clean machine and engine thoroughly before starting maintenance work.
- For maintenance work stand the machine on level ground.
- Perform maintenance work only with the motor switched off.
- Relieve hydraulic pressures before working on hydraulic lines.
- Always remove the main battery switch for all maintenance work.

Environment

During maintenance work catch all oils and fuels and do not let them seep into the ground or into the sewage system. Dispose of oils, coolant and fuels environmentally.

Notes on the fuel system

The lifetime of the diesel engine depends to a great extent on the cleanliness of the fuel.

- Keep fuel free of contaminants and water, since this will damage the injection elements of the engine.
- Drums with inside zinc lining are not suitable to store fuel.
- The fuel drum must rest for a longer period of time before drawing off fuel.
- Do not let the hose stir up the slurry at the bottom of the drum.
- Do not draw off fuel from near the bottom of the drum.
- The rest in the drum is not suitable for the engine and should only be used for cleaning purposes.

Notes on the performance of the engine

On diesel engines both combustion air and fuel injection quantities are thoroughly adapted to each other and determine power, temperature level and exhaust gas quality of the engine.

If your engine has to work permanently in "thin air" (at higher altitudes) and under full load, you should consult the customer service of MARINI or the customer service of the engine manufacturer.

Notes on the hydraulic system

During maintenance work on the hydraulic system cleanliness is of major importance. Make sure that no dirt or other contaminating substances can enter into the system. Small particles can produce flutes in valves, cause pumps to seize, clog nozzles and pilot bores, thereby making expensive repairs inevitable.

- If, during the daily inspection of the oil level the hydraulic oil level is found to have dropped, check all lines, hoses and components for leaks.
- Seal external leaks immediately. If necessary inform the responsible customer service.
- Do not store drums with hydraulic oil outdoors, or at least under a cover. Water can be drawn in through the bunghole when the weather changes.
- Clean fittings, filler covers and the area around such parts before disassembly to avoid entering of dirt.
- Do not leave the tank opening unnecessarily open, but cover it so that nothing can fall in.

Notes on the cooling system

For water-cooled engines the preparation and inspection of the coolant is of greatest importance, as otherwise the engine may be damaged by corrosion, cavitation and freezing.

PREVIEW - YOUFIXTHIS.COM

Download full manual at youfixthis.com

6.1 General notes

The following work must only be carried out by qualified and trained personnel or by the sales service.

Please observe strictly the safety regulations in chapter 2 of these operating and maintenance instructions.

Faults occur frequently due to the fact, that the machine has not been properly operated or serviced. Therefore, whenever a fault occurs, read through these instructions on correct operation and maintenance. If you cannot locate the cause of the fault or eliminate it yourself by following the trouble shooting charts, you should contact our customer service departments at our branch office or dealers.

⚠ Danger

Danger of injury!

Keep away from rotating parts of the engine.

PREVIEW - YOUFIXTHIS.COM

Download full manual at youfixthis.com

Technical Data **9**

Safety regulations **13**

Indicators and Controls **27**

3.1 View of operating console left, middle, right 28
3.2 General notes 30
3.3 Display and control elements operator's stand 30
3.4 View rear right hand control panel 44
3.5 Control elements on rear right hand control panel 45
3.6 View rear left hand control panel 46
3.7 Description of rear left hand control panel 47
3.8 View front right hand control panel 48
3.9 Description of front right hand control panel 49
3.10 View front left hand control panel 50
3.11 Description of front left hand control panel 51
3.12 Automatic levelling control 52
3.13 Description of levelling control 54
3.14 View of ultrasonic levelling system 56
3.15 View of water spray system 57

Operation **59**

4.1 General notes 60
4.2 Tests before taking into operation 60
4.3 Starting the engine 61
4.4 Starting with jump wires 63
4.5 Shutting down the engine 63
4.6 Steering 64
4.7 Lifting / lowering the machine 65
4.8 Switching the milling drum on/off 66
4.9 Operating the scraper 67
4.10 Operation of loading and gathering conveyor belt 68
4.11 Driving the machine 71
4.12 Preparing for work 72
4.13 Work operation, setting the cutting depth 76
4.14 Automatic milling depth control 80
4.15 Milling depth control by means of ultrasound 83
4.16 Stopping/finishing work 85
4.17 Adjusting the seat 86
4.18 Operating the engine hood 86
4.19 Operating the protection roof on the operator's stand 87
4.20 In events of emergency 87
4.21 Preparing the machine for a longer rest 89
4.22 Operating the water spray system 90

PREVIEW - YOUFIXTHIS.COM

Download full manual at youfixthis.com

General

This BOMAG machine has been built in compliance with the latest technical standard and complies with the applicable regulations and technical rules. However, considerable dangers for persons and property may arise from this machine, if:

- it is used for purposes other than the ones it is intended for
- it is operated by untrained personnel
- it is changed or converted in an unprofessional way
- the safety instructions are not observed

Each person involved in the operation, maintenance and repair of the machine must therefore read and comply with these safety regulations. If necessary, this must be confirmed by obtaining the signature of the customer.

Moreover, the following instructions and regulations must obviously also be adhered to:

- applicable accident prevention instructions
- generally accepted safety and road traffic regulations
- country specific safety regulations. It is the duty of the operator to be acquainted with these instructions and to apply these accordingly. This applies also for local regulations concerning different types of handling work. Should the recommendations in these instructions be different from the regulations valid in your country, you must comply with the safety regulations valid in your country.

The machine must only be operated and serviced by persons:

- who have been instructed in operation/handling of the machine,
- and who have read and understood the operating instructions with the safety regulations.

The machine operator is responsible with all work related with the machine.

He should therefore check the operating/road traffic safety of the machine before taking up work and use the machine only for the purpose it is intended for.

Intended use

This machine must only be used for the milling of asphalt or concrete road surfaces.

The machine must only be used inside cordoned off construction sites.

Intended use also includes the compliance with the specified operating, maintenance and repair measures.

Any other use is considered as unintended.

Have the machine inspected by an expert once every year.

Unintended use

However, dangers may arise from the machine

- if the operator acts irresponsibly
- or if the machine is used inappropriately by untrained personnel or for purposes it is not intended for
- if safety features have been removed or are not used.

The machine must especially not be used:

- for the transport of persons, except the operating personnel
- to push vehicles by suing the conveyor belt swinging function
- for towing or pushing other vehicles or machines
- as recovery vehicle or as towing machine for transportation
- the conveyor belt as lifting gear
- the milling of railway tracks, pipes, manhole covers or other objects in the carriage way
- height regulation by pulling on the rope sensor
- with single-man operation
- mixing soils with cement, lime and other soil stabilizing substances
- in explosion endangered environments.

Regular safety inspections

Have the machine inspected by an expert (properly trained person) once every year.

PREVIEW - YOUFIXTHIS.COM

Download full manual at youfixthis.com

Please fill in

. . . . . .

Machine type (Fig. 1)

. . . . . .

Serial number (Fig. 2)

. . . . . .

Engine type (Fig. 3)

. . . . . .

Engine number (Fig. 3)

i Note

Supplement the above data together with the commissioning protocol.

During commissioning our organisation will instruct you in the operation and maintenance of the machine.

Please observe strictly the safety regulations and all notes on risks and dangers!

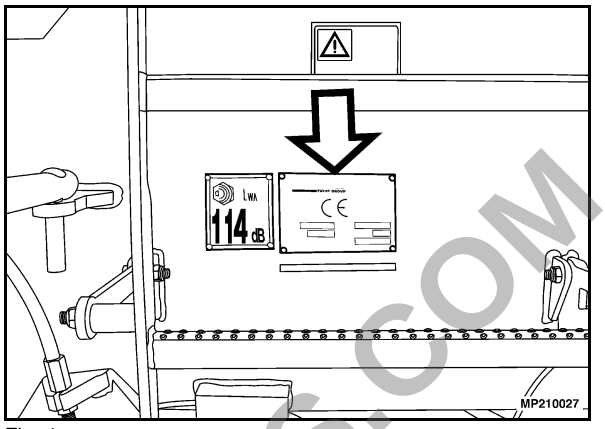

Fig. 1

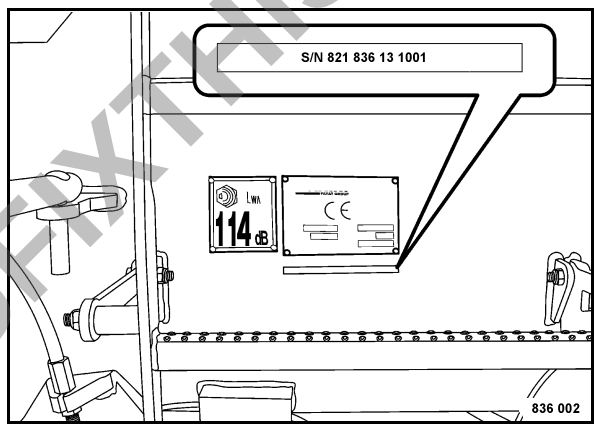

Fig. 2

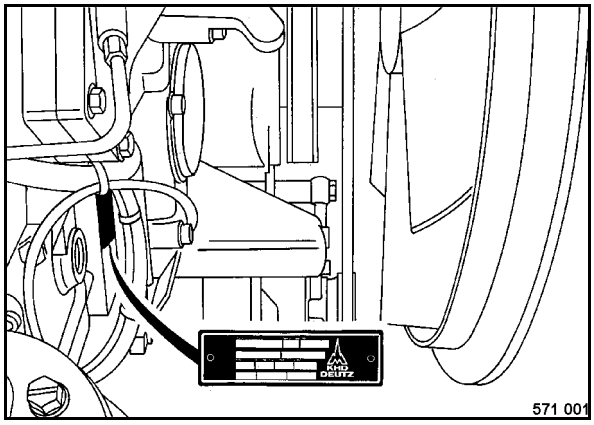

Fig. 3

PREVIEW - YOUFIXTHIS.COM

Download full manual at youfixthis.com

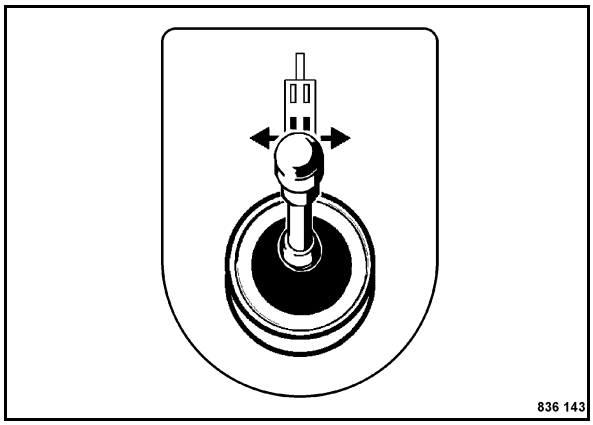

Fig. 26

No. 3 = Control lever, rear steering

Position left = Machine steers to the left

Position right = Machine steers to the right

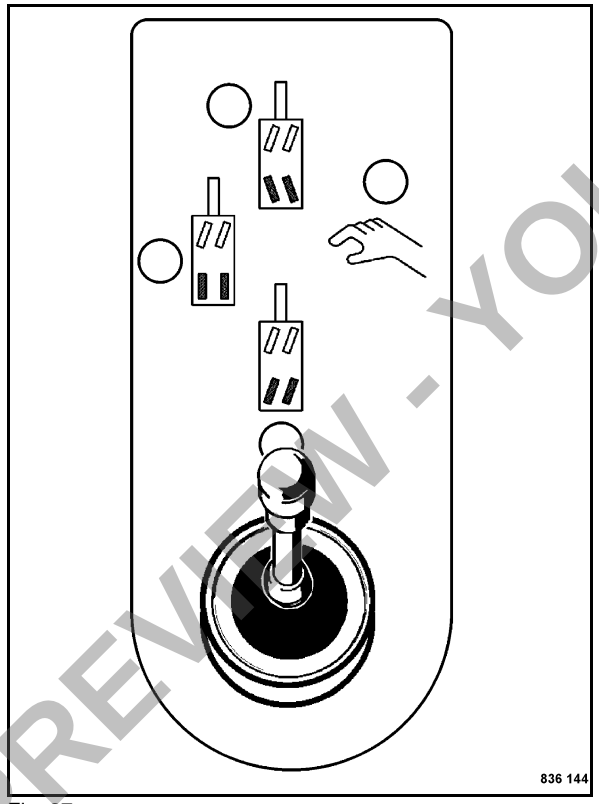

Fig. 27

No. 4 = Control lever, rear steering mode*

Position front = Rear steering asynchronous like front steering

Position rear = Crab walk, rear steering synchronous with front steering

Position left = Rear steering automatically returns to middle position

Position right = Manual, rear steering remains at chosen position

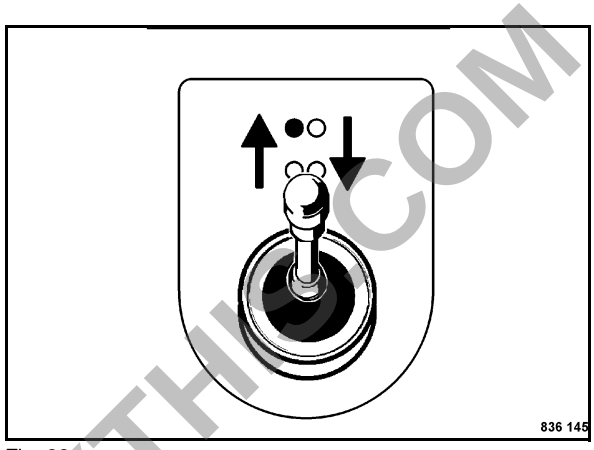

Fig. 28

No. 5 = Control lever for height adjustment front left

Position rear = to lift the machine at front left

Position front = to lower the machine at front left

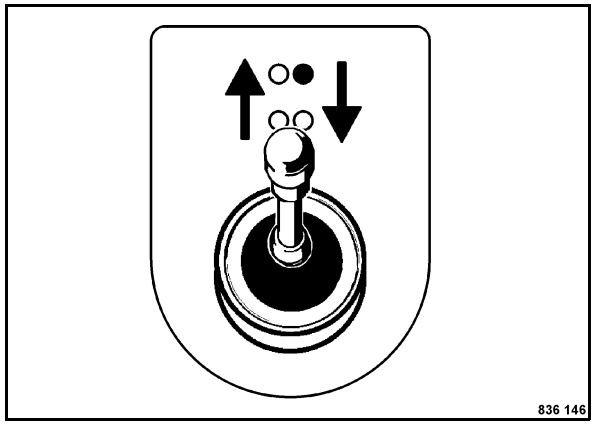

Fig. 29

No. 6 = Control lever for height adjustment front right

Position rear = to lift the machine at front right

Position front = to lower the machine at front right

No. 7 = Rotary button, total height adjustment

* Optional equipment

PREVIEW - YOUFIXTHIS.COM

Download full manual at youfixthis.com

4 Operation

PREVIEW - YOUFIXTHIS.COM

Download full manual at youfixthis.com

4.19 Operating the protection roof on the operator's stand

Folding the protection roof in

i Note

The protection roof can be folded down with the help of an auxiliary hydraulic pump for transport.

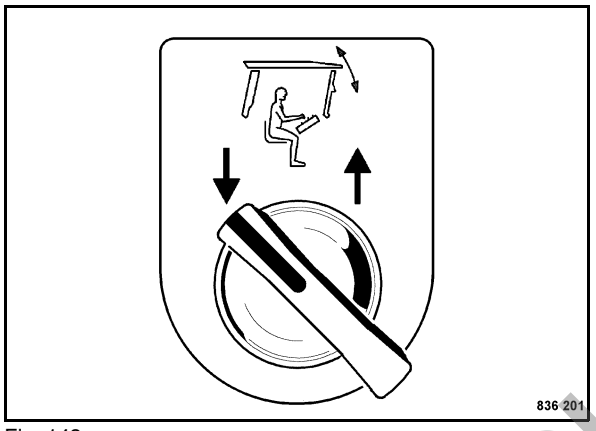

Fig. 143

- Turn the rotary switch (Fig. 143) anti-clockwise to fold the protection roof in.

Folding out the protection roof

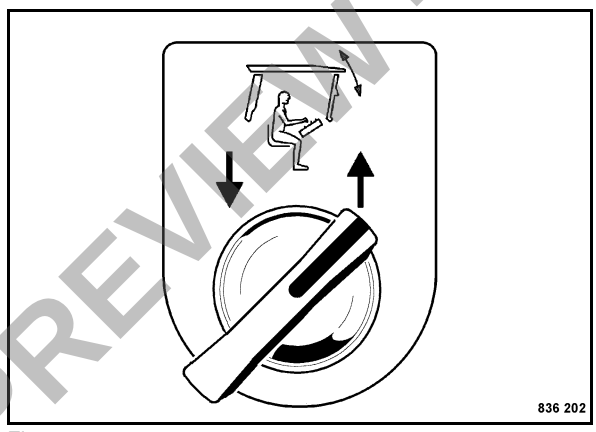

Fig. 144

- Turn the rotary switch (Fig. 144) clockwise to fold the protection roof out.

4.20 In events of emergency

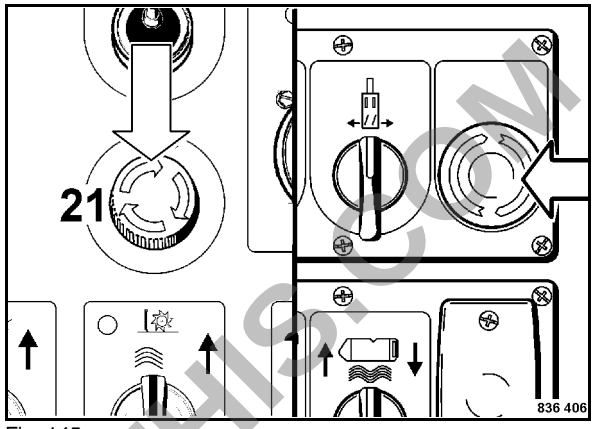

Fig. 145

- In events of emergency operate one of the emergency stop push buttons (Fig. 145) on the control panel of the operator's stand or on the side of the machine.

The engine is shut down and the parking brake is closed.

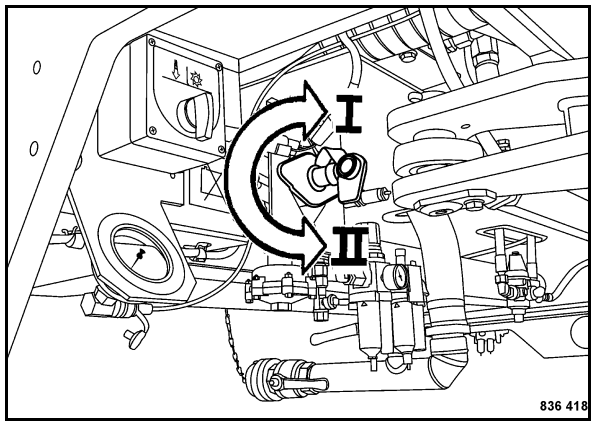

Fig. 146

- In events of emergency, e.g. in case of a cable fire, disconnect the battery from the vehicle network.

⚠ Caution

Pull out the main battery switch at the earliest 40 seconds after switching off the ignition, except in cases of emergency.

PREVIEW - YOUFIXTHIS.COM

Download full manual at youfixthis.com

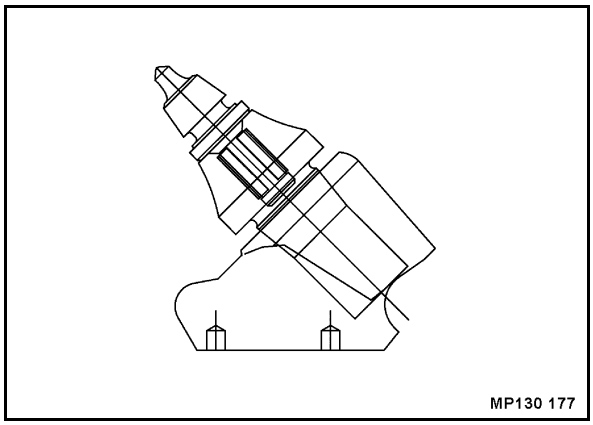

Fig. 192

Cutting tool in good condition (Fig. 192).

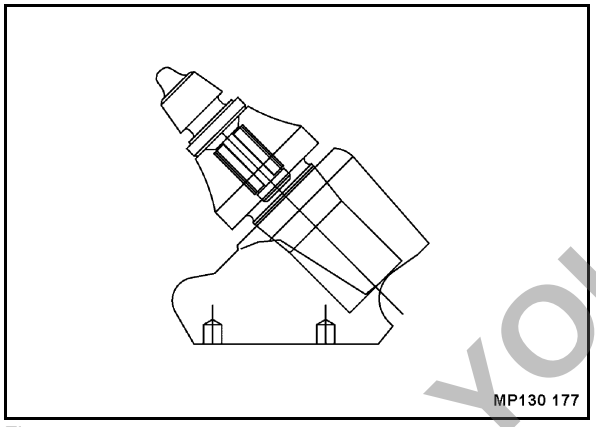

Fig. 193

Cutting tool with even wear (Fig. 193), must be replaced after short term use.

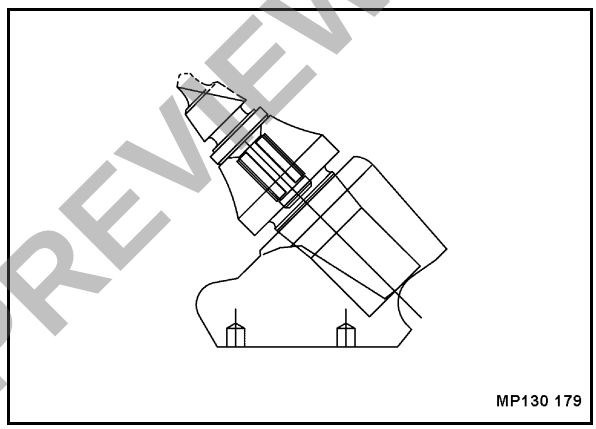

Fig. 194

If the cutting tool is in this condition (Fig. 194), the holder must perhaps also be changed, because the cutting tool cannot rotate. This causes uneven wear.

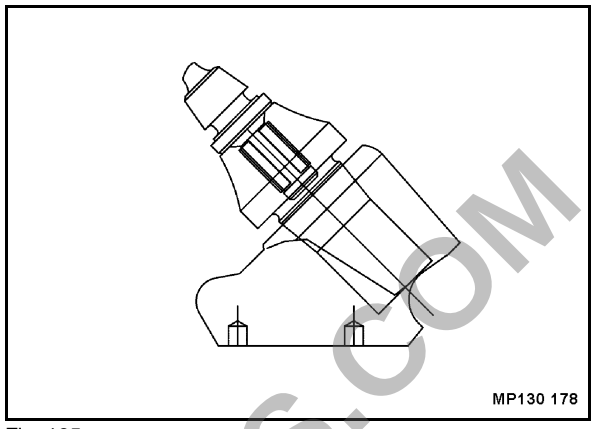

Fig. 195

Cutting tool showing uneven wear (Fig. 195). The cutting tool must be replaced immediately.

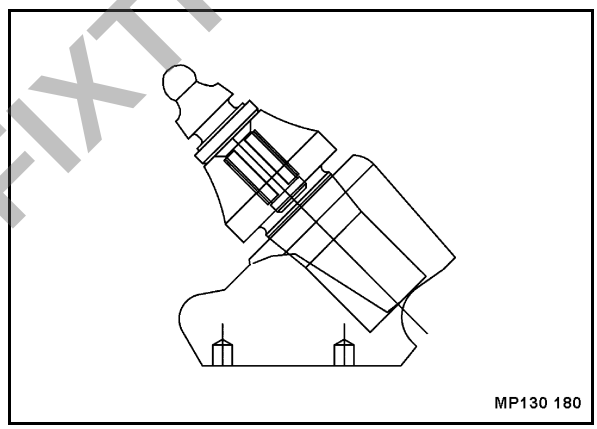

Fig. 196

Tool tip with eroded body (Fig. 196). The cutting tool must be replaced immediately.

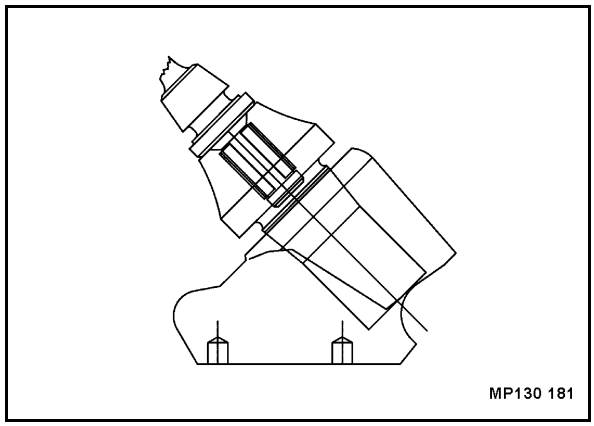

Fig. 197

Tool tip broken off (Fig. 197). The cutting tool must be replaced immediately.

PREVIEW - YOUFIXTHIS.COM

Download full manual at youfixthis.com

5.32 Intercooler, draining oil and condensation water

Environment

Catch running out substances, do not let them seep into the ground.

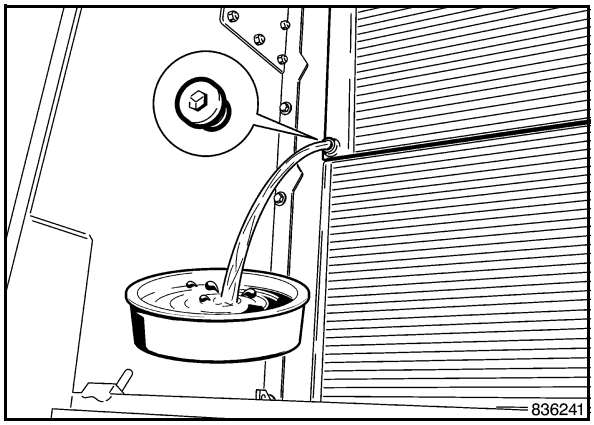

Fig. 266

- Unscrew the plug (Fig. 266) and let oil or condensation water flow out.
- Turn the plug tightly back on.

5.33 Change the hydraulic oil

Note

See also chapter 5.1 "Notes on the hydraulic system".

Caution

Apart from the normal oil change intervals, the hydraulic oil must also be changed after major repairs in the hydraulic system.

Perform the oil change when the hydraulic oil is warm.

Clean the area round hydraulic oil tank, filler opening and breather filter.

Do not use any detergents to clean the system.

Do not start the engine after draining the hydraulic oil.

Replace the hydraulic oil filter element with every hydraulic oil change.

Danger

Danger of scalding!

Danger of scalding by hot oil.

Environment

Catch running out oil and dispose of environmentally.

Note

Generally replace the hydraulic oil filter element after the test run.

PREVIEW - YOUFIXTHIS.COM

Download full manual at youfixthis.com

PREVIEW ONLY

You're viewing 12 of 174 pages

The full manual includes:

- All 174 pages, complete
- Searchable PDF (find any keyword)
- No watermarks
- Instant download
- Print-ready quality

GET FULL MANUAL NOW

Bomag BM 2000/60 Operator Manual

Scan or click anywhere
youfixthis.com

Click anywhere on this page to get the full manual