1 Electronic immobilizer*
2 Display module
3 Fuse box
4 Toggle switch for cable remote control/radio remote control
5 Socket
6 Main battery switch
7 Steering control lever
8 Toggle switch, vibration automatic/manual
9 Toggle switch, travel ranges
10 Toggle switch, engine speed
11 Travel direction control lever
12 Toggle switch for vibration high/low amplitude
13 Emergency stop switch
14 Control light data transfer/power pack radio remote control

* Optional equipment

PREVIEW - YOUFIXTHIS.COM

Download full manual at youfixthis.com

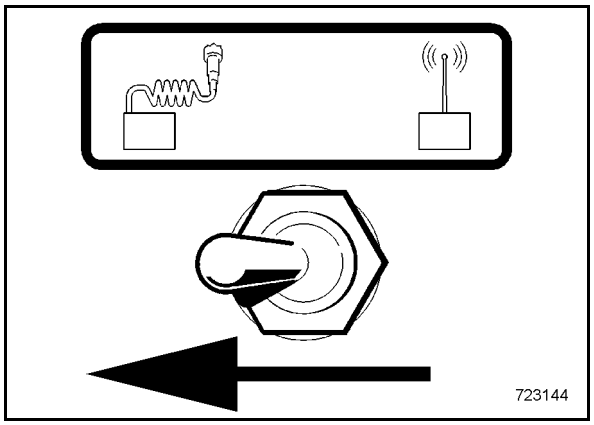

Fig. 41

- Before starting the engine switch the toggle switch (Fig. 41) to the left to position "Cable operation"
- Start the engine (see chapter "Starting the engine").

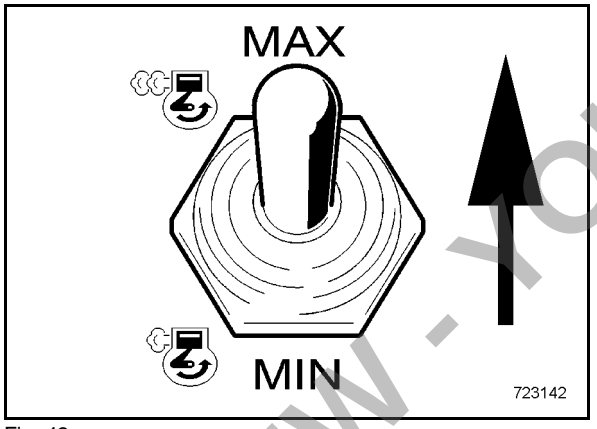

Fig. 42

- Set the toggle switch (Fig. 42) to maximum engine speed.

i Note

If the machine is not operated over a period of 20 seconds, the engine will be switched to "ecomode" (low idle speed).

The engine will return to high idle as soon as either the steering or travel lever is actuated.

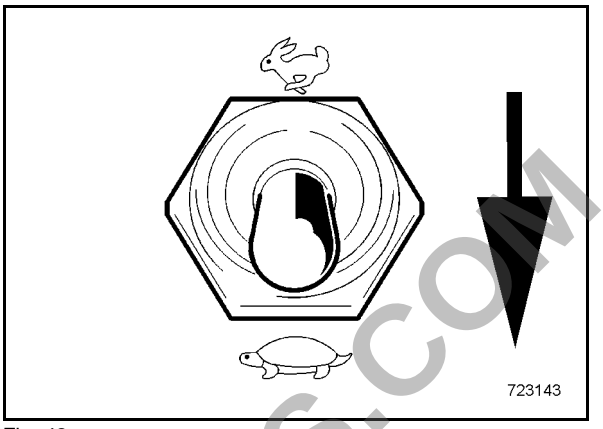

Fig. 43

- Set the toggle switch (Fig. 43) to the desired travel stage.

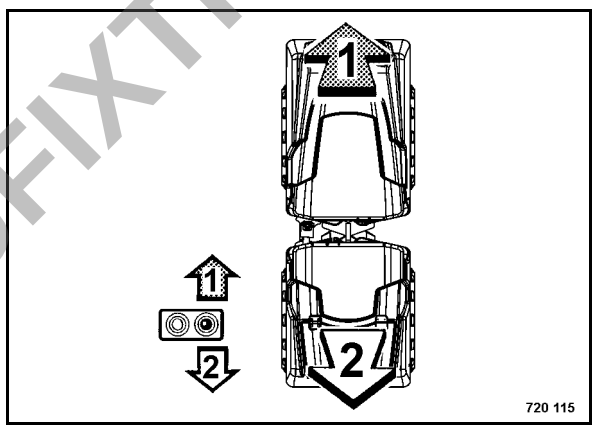

Fig. 44

Actuate the travel lever (Fig. 44). The machines drives with a speed which corresponds with the displacement of the travel control levers.

Standstill	=	Travel lever in middle position
Forward travel 1	=	Shift the travel lever forward
Reverse travel 2	=	Pull the travel lever back

PREVIEW - YOUFIXTHIS.COM

Download full manual at youfixthis.com

5.5 Maintenance table

No.	Maintenance work	Comment	every 10 operating hours, daily	every 250 oper. hours	every 500 oper. hours	every 1000 oper. hours	every 2000 oper. hours	every 3000 oper. hours	as required
5.6	Check the engine oil level	Dipstick mark	X						
5.7	Check the hydraulic oil level	Inspection glass	X						
5.8	Check the fuel level		X						
5.9	Fuel filter, draining off water		X						
5.10	Check the coolant level		X						
5.11	Check the air intake hose			X					
5.12	Change engine oil and oil filter*	at least 1x per year see foot note		X					
5.13	Check, tension, replace the V-belt			X					
5.14	Clean radiator cooling fins			X					
5.15	Change the oil in the vibrator shaft housing	min. 1x per year		X					
5.16	Check the central screw of the drive hub**	see foot note		X					
5.17	Drain the fuel tank sludge				X				
5.18	Change the fuel pre-cleaner, bleed the fuel system				X				
5.19	Battery service, checking the main battery switch	pole grease			X				
5.20	Check the rubber buffers				X				
5.21	Check, adjust the valve clearance	0.145 ... 0.185 mm				X			
5.22	Check the safety field in front of/behind the machine					X			
5.23	Change hydraulic oil and filter***	at least every 2 years					X		

PREVIEW - YOUFIXTHIS.COM

Download full manual at youfixthis.com

6.2 Engine problems

Fault	Possible cause	Remedy
Engine does not start	Fuel tank empty	Fill fuel tank
	Fuel filter clogged, in winter due to paraffin separation	Change the filter, use winter fuel
	Fuel lines leaking	Check all line connections for leaks and tighten the fittings
	Battery not charged or not connected	Charge the battery, check the pole clamps
	Operating error	see section “Starting the engine”
	Incorrect valve clearance	Adjust the valve clearance
	Inclination switch has switched off	Reduce the inclination
Poor starting of engine or engine works irregularly with poor power	Battery power too low	Have battery checked
	Battery pole clamps loose or oxidized, causing the starter to turn too slow	Clean the pole clamps, tighten and cover them with acid-free grease
	Especially in winter: use of too viscous engine oil	Use an engine oil complying with the ambient temperatures
	Fuel supply too low, fuel system clogged by paraffin separation during winter	Change the fuel filter. Check the line connections for leaks and tighten the fittings. Use winter fuel under cold conditions
	The specified valve clearance is not correct	Adjust the valve clearance
	Injection valve or injection pump defective	Have examined by a specialist
Engine looses power and speed, excessive exhaust smoke	Engine oil level too high	Drain the oil down to the top dipstick mark
	Air filter dirty	clean, if necessary use a new one
	Poor compression due to burned or broken piston rings or incorrect valve clearance	Have piston rings and pistons examined by a specialist, adjust the valve clearance
	Injection valve defective	Have examined by a specialist

PREVIEW - YOUFIXTHIS.COM

Download full manual at youfixthis.com

Technical Data **7**

Safety regulations **13**

Indicators and Controls **23**

3.1 General notes 26
3.2 Description of indicators and control elements 26

Operation **33**

4.1 General 34
4.2 Tests before taking into operation 34
4.3 BOSS safety system 35
4.4 Electronic immobilizer 36
4.5 Starting the engine 36
4.6 Driving the machine (cable remote control) 39
4.7 Safety inspection for the cable remote control 42
4.8 Switching the vibration on and off 42
4.9 Shut down the engine 44
4.10 Shutting down the engine manually 45
4.11 Starting operation of the radio remote control 46
4.12 Replacing, recharging the radio remote control power pack 50
4.13 Safety inspection for the radio remote control 52
4.14 Switching off of the radio remote control in case of radio interferences 53
4.15 Entering the machine type code into the display module 53
4.16 Teaching the BOSS safety system transponder 55
4.17 Assembling/removing the drum extension 56
4.18 Loading and transport 56

Maintenance **59**

5.1 General notes on maintenance 60
5.2 Fuels and lubricants 61
5.3 Table of fuels and lubricants 64
5.4 Running-in instructions 65
5.5 Maintenance table 66
5.6 Check the engine oil level 69
5.7 Check the hydraulic oil level 69
5.8 Check the fuel level 70
5.9 Fuel filter, draining off water 70
5.10 Check the coolant level 71
5.11 Check the air intake hose 73
5.12 Changing engine oil and oil filter 73
5.13 Checking, tensioning, replacing the V-belt 75
5.14 Clean the cooling fins on engine and hydraulic oil cooler 76
5.15 Change the oil in the vibrator shaft housing 77
5.16 Checking the central screw of the drive hub 79

PREVIEW - YOUFIXTHIS.COM

Download full manual at youfixthis.com

General

This BOMAG machine has been built in compliance with the latest technical standard and complies with the applicable regulations and technical rules. However, dangers for persons and property may arise from this machine, if:

- it is used for purposes other than the ones it is intended for,
- it is operated by untrained personnel,
- it is changed or converted in an unprofessional way,
- the safety instructions are not observed.

Each person involved in the operation, maintenance and repair of the machine must therefore read and comply with these safety regulations. If necessary, this must be confirmed by obtaining the signature of the customer.

Furthermore, the following obviously also applies:

- applicable accident prevention instructions,
- generally accepted safety and road traffic regulations,
- country specific safety regulations. It is the duty of the operator to be acquainted with these instructions and to apply these accordingly. This applies also for local regulations concerning different types of handling work. Should the recommendations in these instructions be different from the regulations valid in your country, you must comply with the safety regulations valid in your country.

Intended use

This machine must only be used for:

- Compaction of cohesive soils in trench construction
- Construction backfills
- Earthwork in sewer and pipeline construction
- Earthwork in railway and dam construction
- Earthwork in sanitary landfill construction
- Subbase and foundation work

The place of the operator is behind the machine.

When operating the machine from the opposite side, actuation of travel controls will cause machine movements, which are not in compliance with the movement of the control elements.

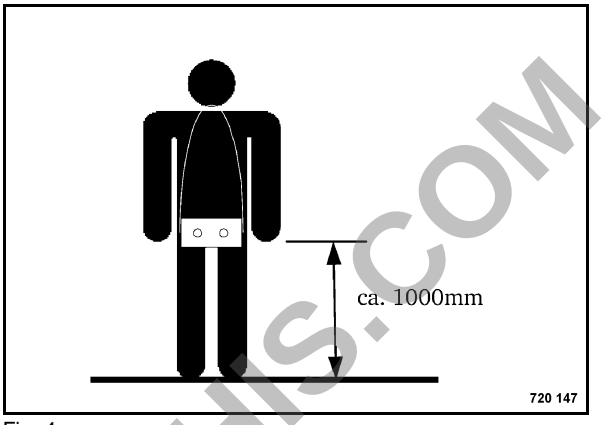

Fig. 4

- The remote control must be carried in front of the body, as intended (Fig. 4).

Unintended use

Danger may arise from the machine if it is used for purposes other than the one it is intended for.

Any danger caused by unintended use is the sole responsibility of the customer or driver/operator, the manufacturer cannot be made liable.

Examples for unintended use are:

- work with vibration on hard concrete, cured bitumen layers or extremely frozen ground
- driving on unstable subbases or insufficient grip or too small contact area (danger of tipping over)
- using the machine on for towing
- operating the machine without visual contact

The transport of persons is prohibited.

Starting and operation of the machine in explosive environments and in underground mining is prohibited.

Remaining dangers, remaining risks

Despite careful work and compliance with standards and regulations it cannot be ruled out that further dangers may arise when working with and handling the machine.

Both the machine as well as all other system components comply with the currently valid safety regulations. Nevertheless, remaining risks cannot be ruled out completely, even when using the ma-

PREVIEW - YOUFIXTHIS.COM
Download full manual at youfixthis.com

Please fill in

. . . . . .

Machine type (Fig. 1)

. . . . . .

Serial-number (Fig. 1 and 2)

. . . . . .

Motor type (Fig. 3)

. . . . . .

Motor number (Fig. 3)

i Note

Supplement the above data together with the commissioning protocol.

During commissioning our organisation will instruct you in the operation and maintenance of the machine.

Please observe strictly the safety regulations and all notes on risks and dangers!

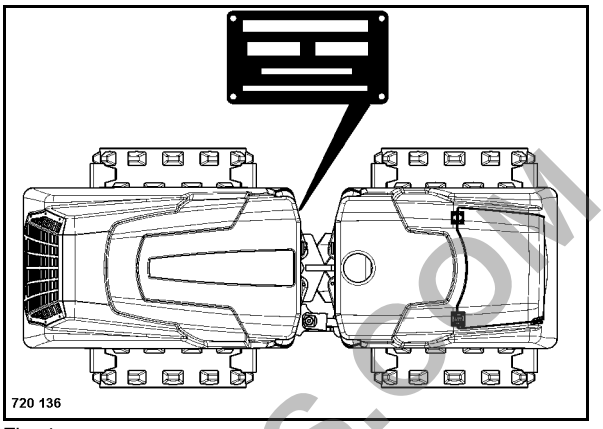

Fig. 1

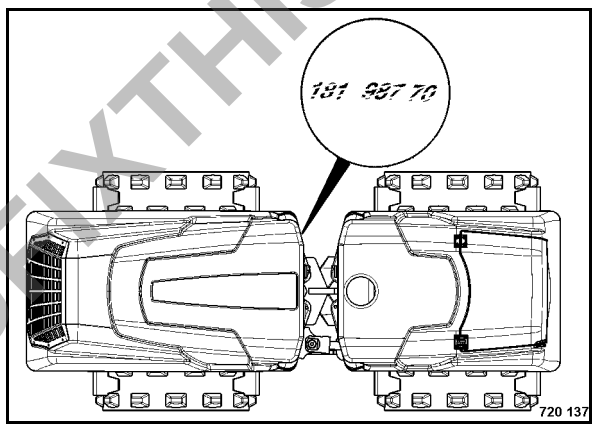

Fig. 2

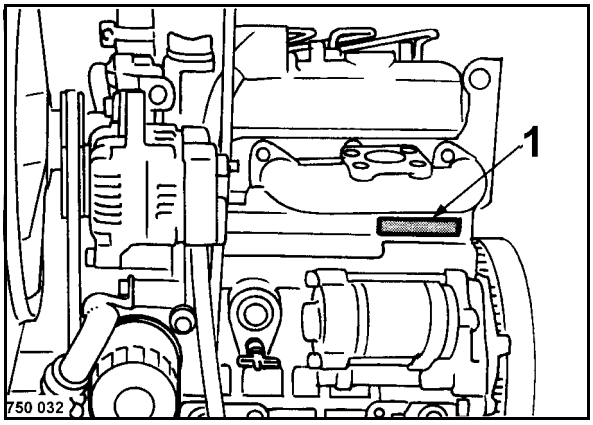

Fig. 3

PREVIEW - YOUFIXTHIS.COM

Download full manual at youfixthis.com

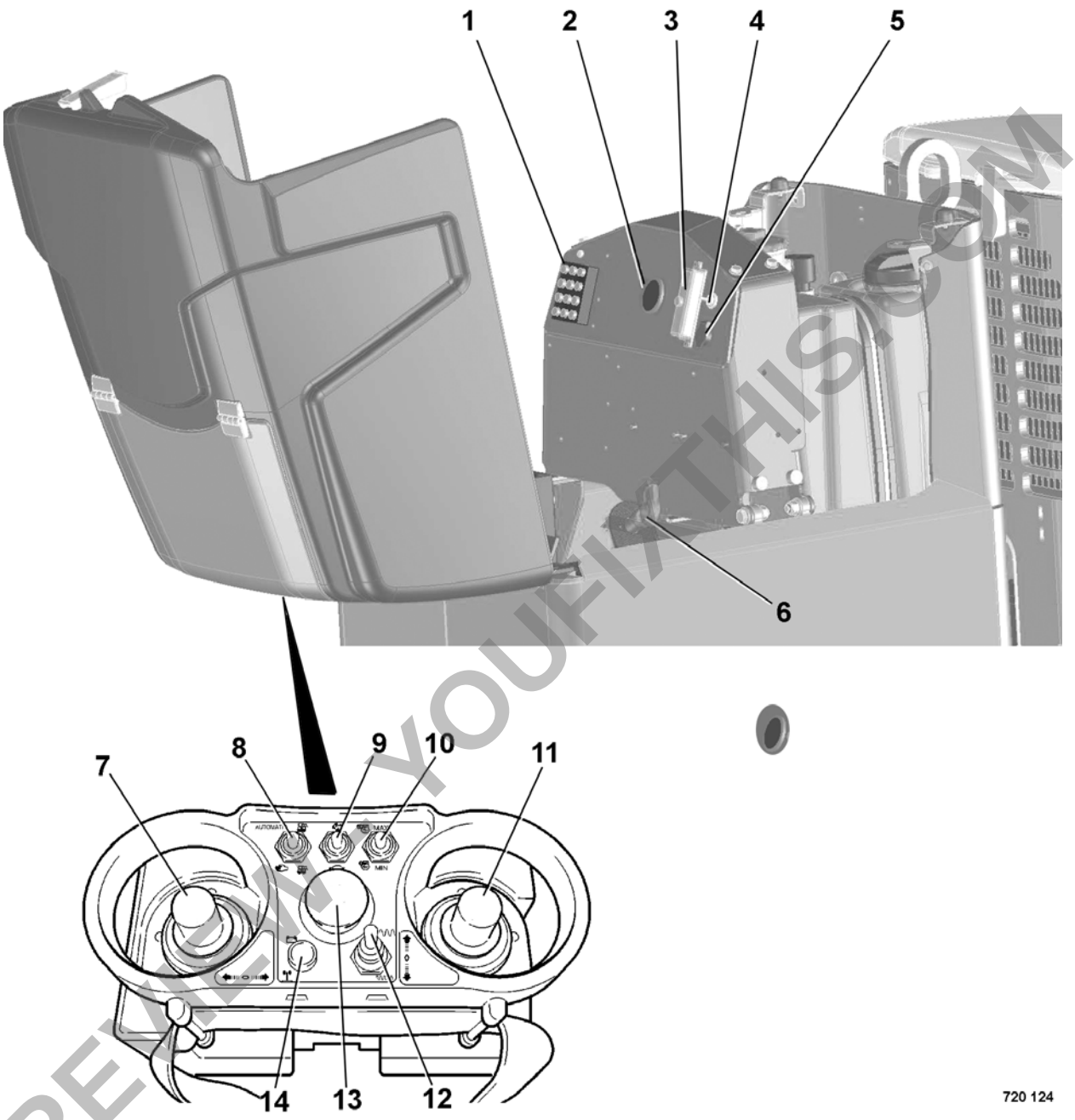

Fig. 10

PREVIEW - YOUFIXTHIS.COM

Download full manual at youfixthis.com

4.10 Shutting down the engine manually

⚠ Caution

If the engine is not automatically shut down when turning the ignition switch to position "0", you may switch it off manually.

⚠ Danger

You should immediately investigate the cause for the engine not shutting down and repair the machine accordingly.

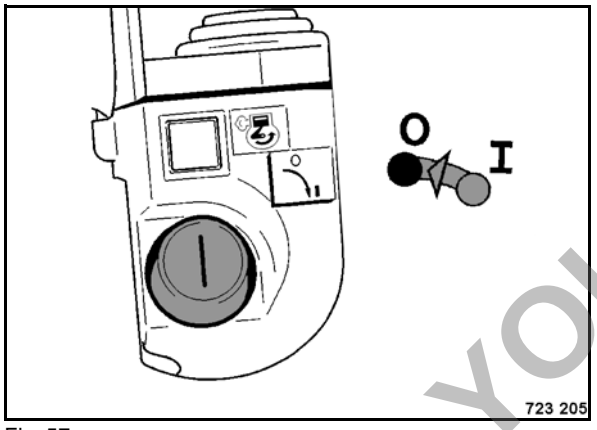

Fig. 57

- Turn the ignition switch (Fig. 57) to position "0".

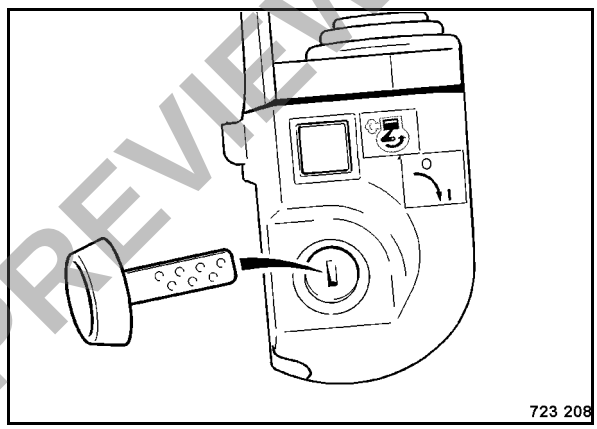

Fig. 58

- Pull off the ignition key (Fig. 58) and store it in a safe place.
- Fold the engine hood open

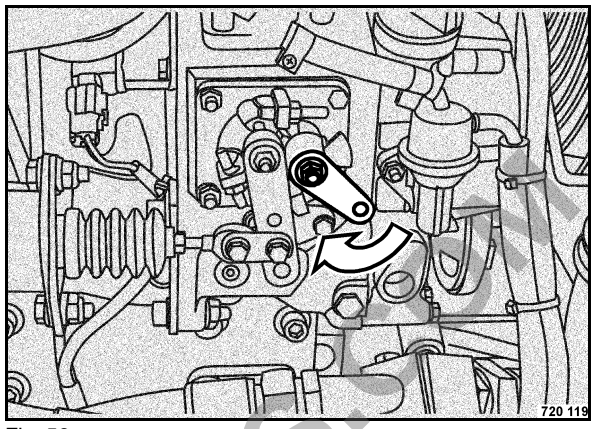

Fig. 59

- Keep the hand lever (Fig. 59) on the engine depressed, until the engine shuts down.
- Open the rear hood.

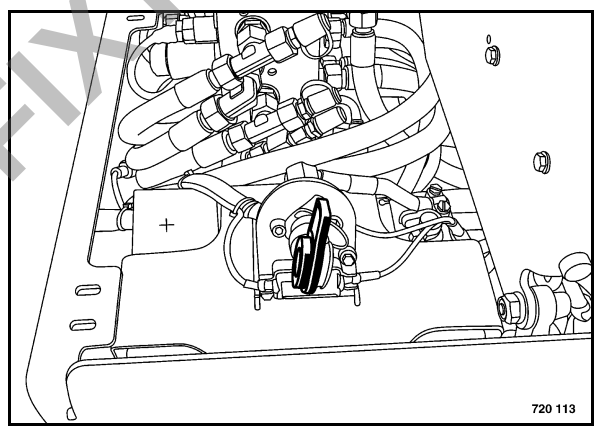

Fig. 60

- Switch off and pull out the main battery switch (Fig. 60).
- Remove the guard.
- Close engine hood and rear hood again.

⚠ Danger

Danger of accident!

Secure the machine against unauthorized use.

PREVIEW - YOUFIXTHIS.COM

Download full manual at youfixthis.com

5.23 Change hydraulic oil and filter

i Note

See also the notes on the hydraulic system in the chapter "General notes on maintenance".

⚠ Danger

Danger of scalding!

When draining off hot hydraulic oil!

⚠ Caution

The hydraulic oil must also be changed after major repairs in the hydraulic system.

Perform the oil change when the hydraulic oil is warm.

Replace the hydraulic oil filter element with every hydraulic oil change.

Clean the area round hydraulic oil tank, filler opening and breather filter.

Do not start the engine after draining the hydraulic oil.

Do not use any detergents to clean the system.

For quality and quantity of oil refer to the "table of fuels and lubricants".

When changing from mineral oil based hydraulic oil to an ester based biologically degradable oil, you should consult the lubrication oil service of the oil manufacturer for details.

Environment

Catch running out oil and dispose of environmentally.

- Drive the machine, until the hydraulic oil has reached operating temperature.
- Shut down the engine.

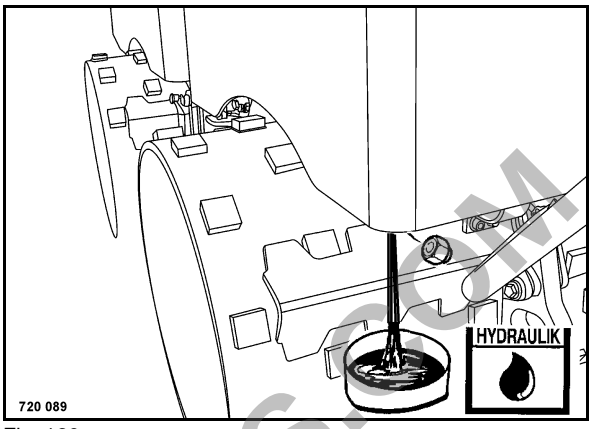

Fig. 126

- Unscrew the plug (Fig. 126) and drain off all hydraulic oil.
- Turn the plug tightly back in.

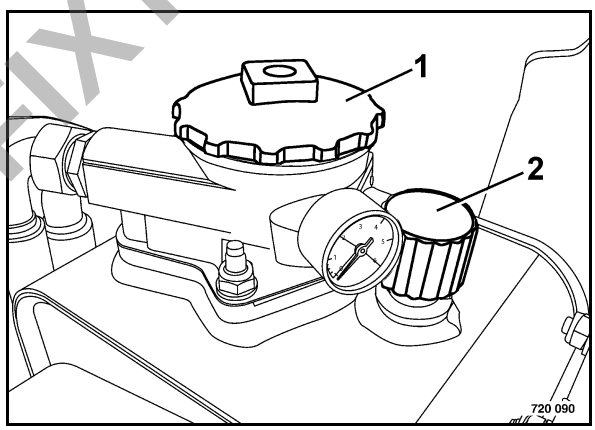

Fig. 127

- Unscrew the filter cover 1 (Fig. 127) and take out the filter element.

i Note

We recommend to use the BOMAG filling and filtering unit with fine filter to fill the system. This ensures finest filtration of the hydraulic oil, prolongs the lifetime of the hydraulic oil filter and protects the hydraulic system.

- Fill in new hydraulic oil.
- Insert a new filter and reassemble the filter cover.
- Replace the breather filter (2).
- Perform a test run and check the system for leaks.

PREVIEW - YOUFIXTHIS.COM

Download full manual at youfixthis.com

Trouble shooting

Fault	Possible cause	Remedy
	Emergency stop push button	Switch operated? Display off, pull button out Switch defective? replace
	Transmitter or receiver defective	Replace transmitter or receiver
	Main wiring loom	Replace the main wiring loom

PREVIEW - YOUFIXTHIS.COM

Download full manual at youfixthis.com

PREVIEW ONLY

You're viewing 11 of 132 pages

The full manual includes:

- All 132 pages, complete
- Searchable PDF (find any keyword)
- No watermarks
- Instant download
- Print-ready quality

GET FULL MANUAL NOW

Bomag BMP 8500 Operator Manual

Scan or click anywhere
youfixthis.com

Click anywhere on this page to get the full manual