



Blurred on purpose. The manual you buy has this page in full quality.

PREVIEW - YOUFIXTHIS.COM

Download full manual at youfixthis.com

1 E-Vib display*
2 Instrument cluster, left
3 Emergency stop push button
4 Rotary switch for hazard light system*
5 Instrument cluster, right
6 Speedometer*
7 Ignition switch
8 Rotary switch for chip spreader*
9 Rotary momentary contact switch for chipping quantity control*
10 Rotary momentary contact switch for engine speed
11 not used!
12 Rotary switch for tire sprinkling system (only AC-4)
13 Rotary switch for sprinkling pumps
14 Rotary switch for vibration, drum pre-selection
15 Rotary switch for vibration, manual - zero - automatic
16 Rotary switch for amplitude pre-selection
17 Rotary switch for direction indicators left/right*
18 Rotary switch for lighting (StVZO)*
19 Rotary switch for working head lights*
20 Lever, swivelling of driver's seat
21 Momentary contact push button to raise the edge cutter
22 Momentary contact push button to lower the edge cutter
23 Travel lever, right
24 Push button for manual vibration
25 Push button for warning horn
26 Rotary switch for edge cutter sprinkler system*
27 Interval switch for pressure sprinkler system
28 Travel lever, left
29 Momentary contact push button for crabwalk, left
30 Momentary contact push button for crabwalk, right
31 Push button for manual vibration
32 Lever, lateral sliding of driver's seat
33 Rotation stop for travel lever movement
34 2-pole socket

* Optional equipment

PREVIEW - YOUFIXTHIS.COM



Download full manual at youfixthis.com

## 4.1 General notes

Please read section 3 Indicators and Control Elements thoroughly before operating the machine if you are not yet fully familiar with the indicators and control elements of the machine.

All indicators and control elements are described in detail in this chapter.

## 4.2 Tests before taking into operation

The following inspections must be carried out before each working day or before a longer working period.

**⚠ Danger**

**Danger of accident!**

**Please observe strictly the safety regulations in chapter 2 of this instruction manual!**

- Park the machine on ground as level as possible.

**Check:**

- fuel tank and fuel lines for leaks
- screw joints for tight fit
- function of steering
- machine for cleanliness, damage
- Presence of the appropriate operating and maintenance instructions
- proper maintenance of the machine
- right and left hand service doors closed and locked

**i Note**

*For a description of the following tasks refer to the chapter "maintenance every 10 operating hours".*

- Engine oil level

**i Note**

*In hydraulic systems filled with Panolin HLP Synth. 46 always use the same oil to top up. With other ester based oils consult the lubrication oil service of the respective oil manufacturer.*

- Check the hydraulic oil level, top up if necessary.
- Check the coolant level, top up if necessary.

**⚠ Danger**

**Fire hazard!**

**Do not refuel in closed rooms.**

- Check the fuel level, top up if necessary.

PREVIEW - YOUFIXTHIS.COM



Download full manual at youfixthis.com

## 5.5 Maintenance chart

| No. | Maintenance work | Remark | every 10 operating hours, daily | every 250 operating hours | every 500 operating hours | every 1000 operating hours | every 2000 operating hours | every 3000 operating hours | as required |
|---|---|---|---|---|---|---|---|---|---|
| 5.6 | Check the engine oil level | Dipstick mark | X | | | | | | |
| 5.7 | Check the water separator | | X | | | | | | |
| 5.8 | Check the fuel level | | X | | | | | | |
| 5.9 | Check the hydraulic oil level | Inspection glass | X | | | | | | |
| 5.10 | Check the water level | | X | | | | | | |
| 5.11 | Checking the emulsion level | | X | | | | | | |
| 5.12 | Clean the cooling fins on engine and hydraulic oil cooler | | | X | | | | | |
| 5.13 | Change the engine oil* | see foot note | | | X | | | | |
| 5.14 | Change the engine oil filter cartridge* | min. 1x per year | | | X | | | | |
| 5.15 | Service the air conditioning (summer operation) | | | | X | | | | |
| 5.16 | Service the battery | Pole grease | | | X | | | | |
| 5.17 | Change the fuel filter cartridge | | | | | X | | | |
| 5.18 | Change the fuel pre-filter cartridge | | | | | X | | | |
| 5.19 | Change the oil in the drum drive gear** | see foot note | | | | X | | | |
| 5.20 | Check, tension, lubricate the steering chain | | | | | X | | | |
| 5.21 | Check the engine mounts | | | | | X | | | |
| 5.22 | Check, tension, replace the V-belt | | | | | X | | | |
| 5.23 | Checking, tensioning, replacing the refrigerant compressor V-belt | | | | | X | | | |

PREVIEW - YOUFIXTHIS.COM



Download full manual at youfixthis.com

## 6.2 Engine

| Faults | Possible cause | Remedy |
|---|---|---|
| The engine does not start | Starter defective or pinion not engaging | Have examined by a specialist |
| | Fuel tank empty | Fill and bleed the tank |
| | Temperature below starting limit | Use winter fuel and engine oil acc. to the ambient temperature. |
| | Fuel filter clogged, in winter due to paraffin separation. | Change the filter. use winter fuel |
| | Fuel lines leaking | Check all line connections for leakages and tighten the fittings. |
| | Battery discharged or not connected | Tighten the pole clamps, check the cable connections |
| | Injection valves or injection pump defective | Have examined by a specialist |
| The engine starts poorly and works irregularly with poor power | Battery power too low, battery clamps loose or oxidized, causing the starter to turn too slowly | Have the battery checked, clean the terminal clamps, tighten them and cover them with acid free grease |
| | Especially during winter: the use of too viscous engine oil | Use engine oil suitable for the ambient temperature |
| | Fuel supply restricted, in winter fuel system clogged due to paraffin separation | Change the fuel filter. Check the line connections for leaks and tighten the fittings. Use winter fuel in the cold season. |
| | Incorrect valve clearance | Adjust the valve clearance |
| | Injection valve defective | Have examined by a specialist |
| | Injection lines leaking | Check the lines for leakages |
| | Turbo charger defective | Have examined by a specialist |
| | Dry air filter dirty | clean, replace if necessary |
| | Excessive play in the throttle cable | Adjust the throttle cable, change it if necessary |

PREVIEW - YOUFIXTHIS.COM



Download full manual at youfixthis.com

**Technical Data** **7**

**Safety regulations** **13**

**Indicators and Controls** **21**

3.1 General notes 24
3.2 Description of indicators and control elements 24

**Operation** **39**

4.1 General notes 40
4.2 Tests before taking into operation 40
4.3 Starting the engine 41
4.4 Starting with jump wires 44
4.5 Driving the machine 45
4.6 Stopping the machine, operating the parking brake 47
4.7 Shutting the engine down 47
4.8 Switching the vibration on and off 48
4.9 Operating the crabwalk 51
4.10 Switching the pressure sprinkling system on and off 52
4.11 Sprinkling of edge cutter 53
4.12 Actuating the emergency stop switch 53
4.13 Adjusting the rotation stop for travel lever movement 54
4.14 Adjusting the driver's seat 54
4.15 Opening or closing the cabin window 55
4.16 Towing 55
4.17 Transport 57

**Maintenance** **59**

5.1 General notes on maintenance 60
5.2 Fuels and lubricants 61
5.3 Fuels, lubricants and filling capacities 63
5.4 Running-in instructions 64
5.5 Maintenance chart 65
5.6 Check the engine oil level 68
5.7 Check, clean the water separator 68
5.8 Check the fuel level 69
5.9 Check the hydraulic oil level 70
5.10 Check the water level 70
5.11 Checking the emulsion level (AC-machine) 71
5.12 Check condition of engine oil and hydraulic oil cooler, clean 72
5.13 Change the engine oil 73
5.14 Change the engine oil filter cartridge 74
5.15 Servicing the air conditioning (summer operation) 74
5.16 Service the battery 77
5.17 Change the fuel filter cartridge 79

PREVIEW - YOUFIXTHIS.COM



Download full manual at youfixthis.com

## General notes

**This BOMAG machine is built in accordance with the latest technical standard and the valid technical rules and regulations. There is, however, a risk of danger for persons and property if:**

- the machine is used for purposes other than those it is intended for
- the machine is operated by untrained personnel
- the machine is modified or converted in an unprofessional way
- the applicable safety regulations are not observed.

**Each person involved in operation, maintenance and repair of the machine must therefore read and apply these safety regulations. This should be confirmed by obtaining the signatures of the customer, if necessary.**

Furthermore the following regulations and instructions are obviously also valid:

- applicable accident prevention instructions
- generally acknowledged safety and road traffic regulations
- country specific safety regulations. It is the duty of the operator to know and observe these regulations. This applies also for local regulations and the regulations for various types of manual work. If the recommendations in this manual differ from the regulations valid in your country, you must strictly observe the regulations in your country.

## Intended use

This machine must only be used for:

- Compaction of bituminous material, e.g. road surface layers.
- medium to heavy compaction work in earth construction (road sub-bases)
- You should only operate the machine with fully functional safety equipment.
- Have the machine inspected by an expert once every year.

## Unintended use

Dangers may, however, arise from the machine if it is used by untrained personnel in an unprofessional way or if it is used for purposes other than those mentioned in these instructions.

Do not work with vibration on hard concrete, on a cured concrete layer or heavily frozen ground.

Starting and operation of the machine in an explosive environment is prohibited.

## Who is allowed to work with the machine?

The machine must only be operated by trained and authorized persons which are at least 18 years of age. The responsibilities for the operation of the machine must be clearly specified and complied with.

Persons under the influence of alcohol, medication or drugs must not operate, service or repair the machine.

Maintenance and repair tasks require specific knowledge and must therefore only be carried out by trained and qualified personnel.

## Conversions and alterations to the machine

Unauthorized conversions to the machine are prohibited for safety reasons.

Original parts and accessories have been specially designed for this machine. We wish to make expressly clear that we have not tested or authorized any original parts or special equipment not supplied by us. The installation and/or use of such products can impair the active and/or passive driving safety. The manufacturer expressly excludes any liability for damage resulting from the use of non-original parts or accessories.

## Safety notes in the operating and maintenance instructions:

**⚠ Danger**

**Sections marked like this point out possible dangers for persons.**



PREVIEW - YOUFIXTHIS.COM

Download full manual at youfixthis.com

**Please fill in**

. . . . . .

Machine type (Fig. 1)

. . . . . .

Serial-number (Fig. 1 and 2)

. . . . . .

Engine type (Fig. 3)

. . . . . .

Engine number (Fig. 3)

**i Note**

*Supplement the above data together with the commissioning protocol.*

*During commissioning our organisation will instruct you in the operation and maintenance of the machine.*

*Please observe strictly the safety regulations and all notes on risks and dangers!*

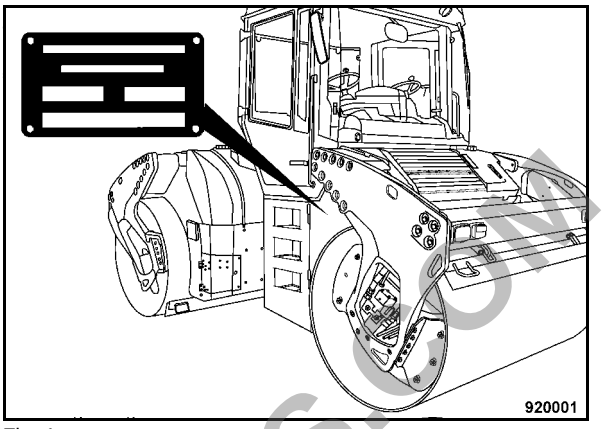


Fig. 1

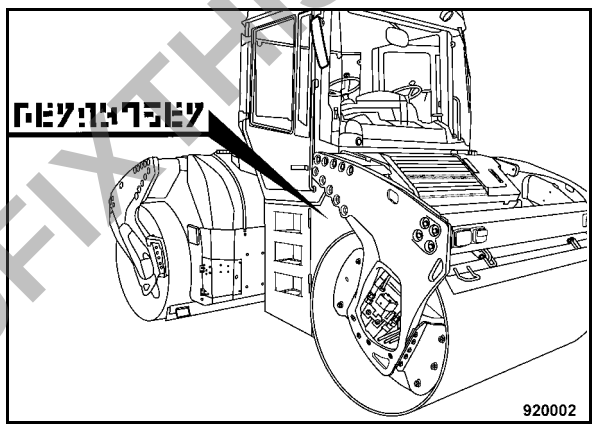


Fig. 2

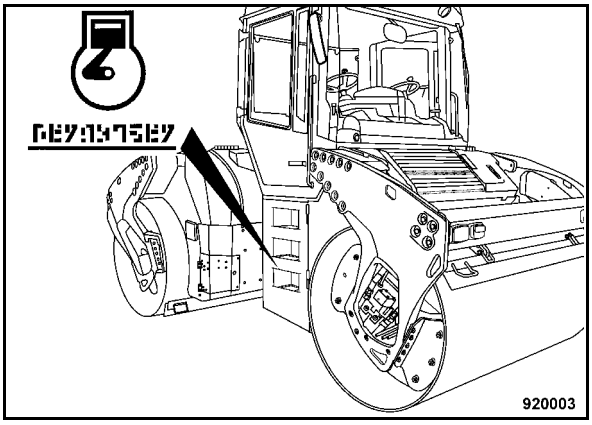


Fig. 3

PREVIEW - YOUFIXTHIS.COM



Download full manual at youfixthis.com

## 3.1 General notes

Please read this section thoroughly before operating this machine if you are not yet conversant with the indicators and control elements. All functions are described in detail hereunder.

Paragraph 4 Operation contains only concise descriptions of the individual operating steps.

## 3.2 Description of indicators and control elements

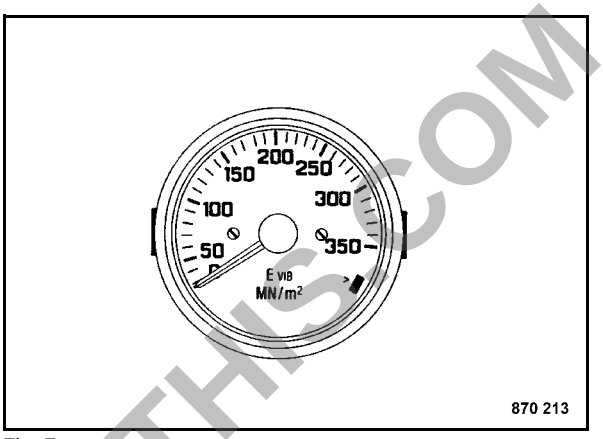


Fig. 7

**No. 1 = $E_{VIB}$display***

is a compaction measuring unit for continuous display of the load bearing characteristics ($MN/m^2$) during the compacting pass.

**$E_{VIB}$ value**

| | | |
|---|---|---|
| Increase | = | higher load bearing capacity |
| Constant | = | end of compaction |

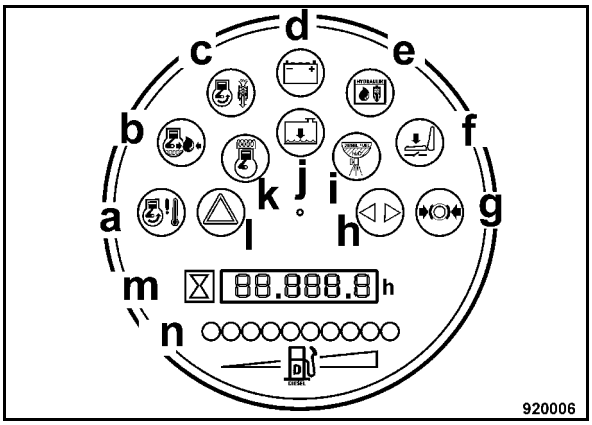


Fig. 8

**No. 2 = Instrument cluster, left**

**i Note**

*With the ignition switch in position I all gauges and instruments are switched on for 3 seconds.*

* Optional equipment



PREVIEW - YOUFIXTHIS.COM

Download full manual at youfixthis.com

## 4.5 Driving the machine

**⚠ Danger**

**Danger of accident!**

**Wet and loose soils considerably reduce the ground adhesion of the machine on inclinations and slopes.**

**Soil conditions and weather influences impair the gradability of the machine.**

**Do not drive up and down inclinations exceeding the maximum gradability of the machine (see technical data).**

**Always give way to loaded transport vehicles!**

**Before starting to drive make sure that the drive range is absolutely safe.**

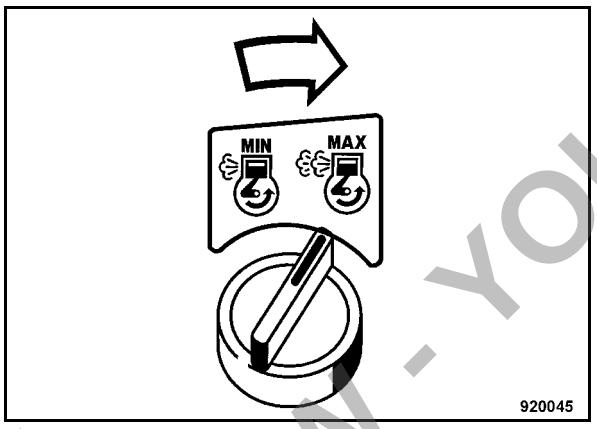


Fig. 63

- Turn the rotary momentary contact switch for engine speed clockwise to "MAX" (Fig. 63).

**i Note**

*The engine revs up to maximum speed.*

**⚠ Caution**

**Always drive and vibrate with max. engine speed! Control the travel speed with the travel lever.**

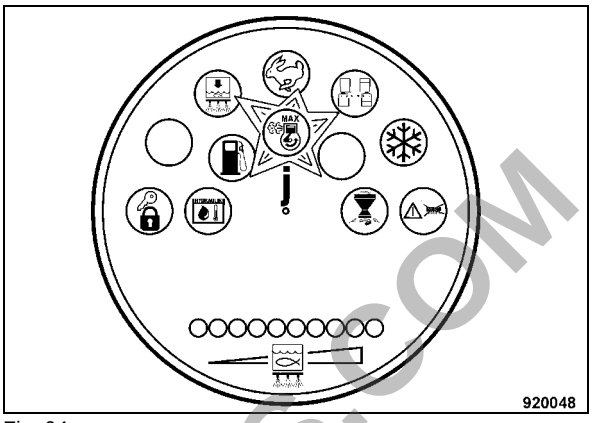


Fig. 64

**i Note**

*Control light j (Fig. 64) in right hand instrument cluster lights up.*

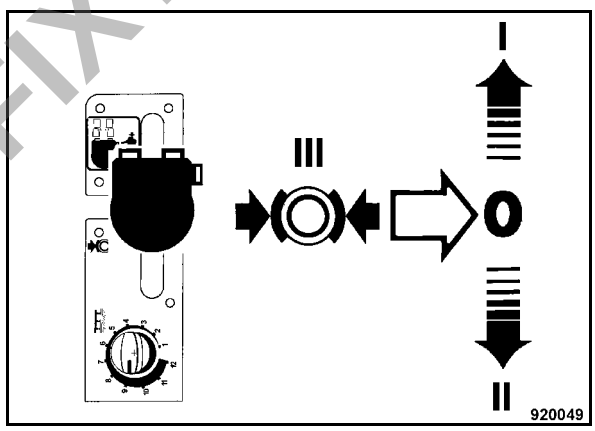


Fig. 65

- Disengage the travel lever (Fig. 65) from notched position III towards the inside.

**i Note**

*The brake warning lamp (g) in the instrument cluster goes out.*

- Move the travel lever form "0"-position slowly to forward or reverse.

**i Note**

*The machine drives forward or backward with a speed that corresponds with the actuation of the travel lever.*

- Move the travel lever back to "0"-position.

PREVIEW - YOUFIXTHIS.COM



Download full manual at youfixthis.com

**⚠ Caution**

**Check the V-belt tension after a running time of 30 minutes.**

## 5.24 Changing the oil in the vibrator shaft tube

**⚠ Caution**

**Change the oil in both drums.**

**Environment**

**Catch running out oil and dispose of environmentally.**

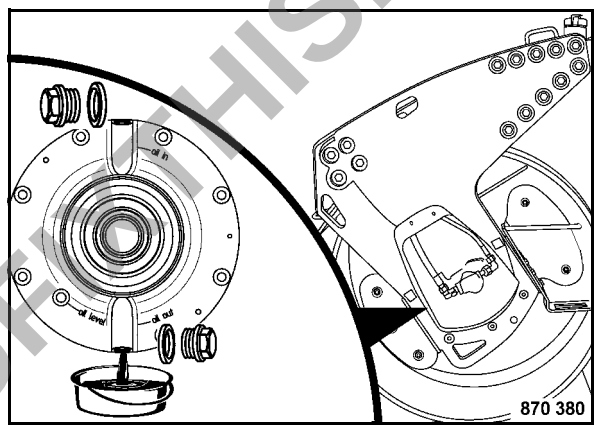


Fig. 152

- Move the drum until drain and filler plugs (Fig. 152) are exactly vertically in line.
- Clean and unscrew drain and filler plugs.
- Drain off and catch old oil.
- Clean and turn the oil drain plug back in tightly after all oil has run out.

PREVIEW - YOUFIXTHIS.COM



Download full manual at youfixthis.com

# PREVIEW ONLY

You're viewing 11 of 110 pages

## The full manual includes:

- All 110 pages, complete
- Searchable PDF (find any keyword)
- No watermarks
- Instant download
- Print-ready quality

GET FULL MANUAL NOW

**Bomag BW 141 AD-4, BW 151 AD-4, BW 151 AC-4, BW 161 ADCV Operator Manual**

**Scan or click anywhere**
youfixthis.com

*Click anywhere on this page to get the full manual*