2.2 Trouble shooting diagram

Machine moves with the travel lever in „NEUTRAL“

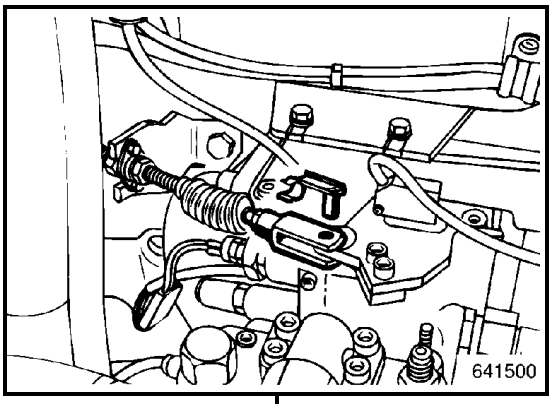

Check the neutral position

- shift the travel control lever to „Neutral“
- detach the travel control cable from the pump
- check, whether the bores in fork head and control lever are in line

Adjustment OK?

no

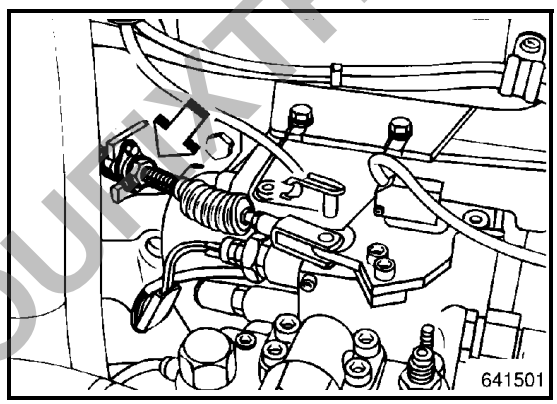

Adjust the travel control cable

yes

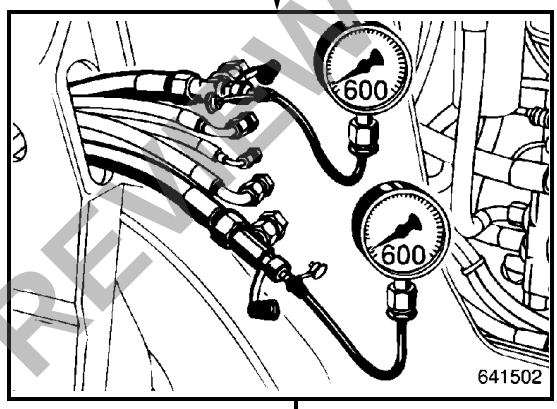

Check the mechanical neutral position

Note: Operate the seat contact switch

- operate the emergency stop switch to connect both control chambers
- install 600 bar pressure gauges to MA and MB
- secure the drums with suitable chocks
- run the engine at max. speed
- read the pressure gauges

Nominal value: Equal pressure on both gauges

- repeat this pressure test with 60 bar gauges

Nominal value OK?

no

yes

PREVIEW - YOUFIXTHIS.COM

Download full manual at youfixthis.com

3.3 Removing and installing the drum

i Note

The procedures for the removal of front and rear drums are identical. The following instructions describe the removal of the front drum, however, the work steps apply also for the removal of the rear drum.

⚠ Danger

Danger of accident!

Block front and rear drums with wedges against rolling!

1. Jack the appropriate side of the machine up (Fig. 1), until the rubber buffers on the drive disc are relieved.

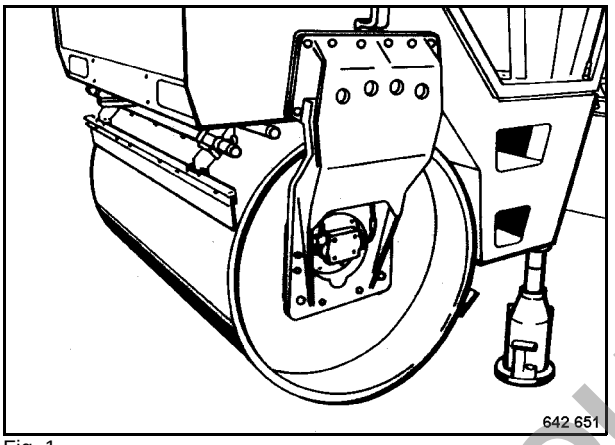

Fig. 1

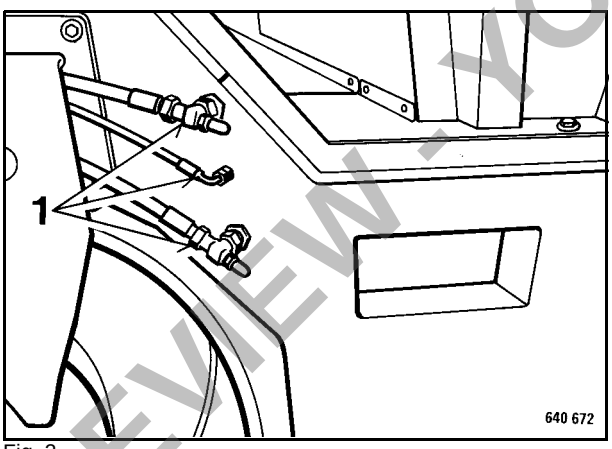

Fig. 2

2. Mark the hydraulic hoses on the vibration side. Unscrew the spigot nuts 1 (Fig. 2) from the lateral connections. Close all connections and hydraulic hoses immediately with plugs.

⚠ Caution

Catch running out hydraulic oil and dispose of environmentally.

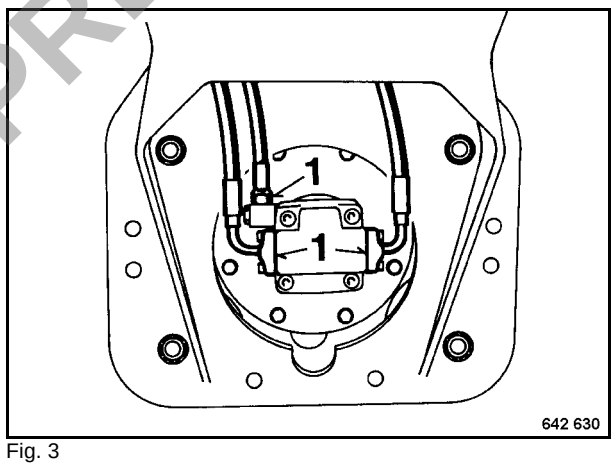

Fig. 3

3. Mark the hydraulic hoses on the vibration motor and unscrew the spigot nuts from ports 1 (Fig. 3). Close all connections and hydraulic hoses immediately with plugs.

⚠ Caution

Catch running out hydraulic oil and dispose of environmentally.

4. Pull the hydraulic lines out of the support leg.

PREVIEW - YOUFIXTHIS.COM

Download full manual at youfixthis.com

Tightening torques

- Tighten fastening screws and nuts according to the table of tightening torques.
- Tightening torques deviating from the ones in the table are specially mentioned in the repair instructions.

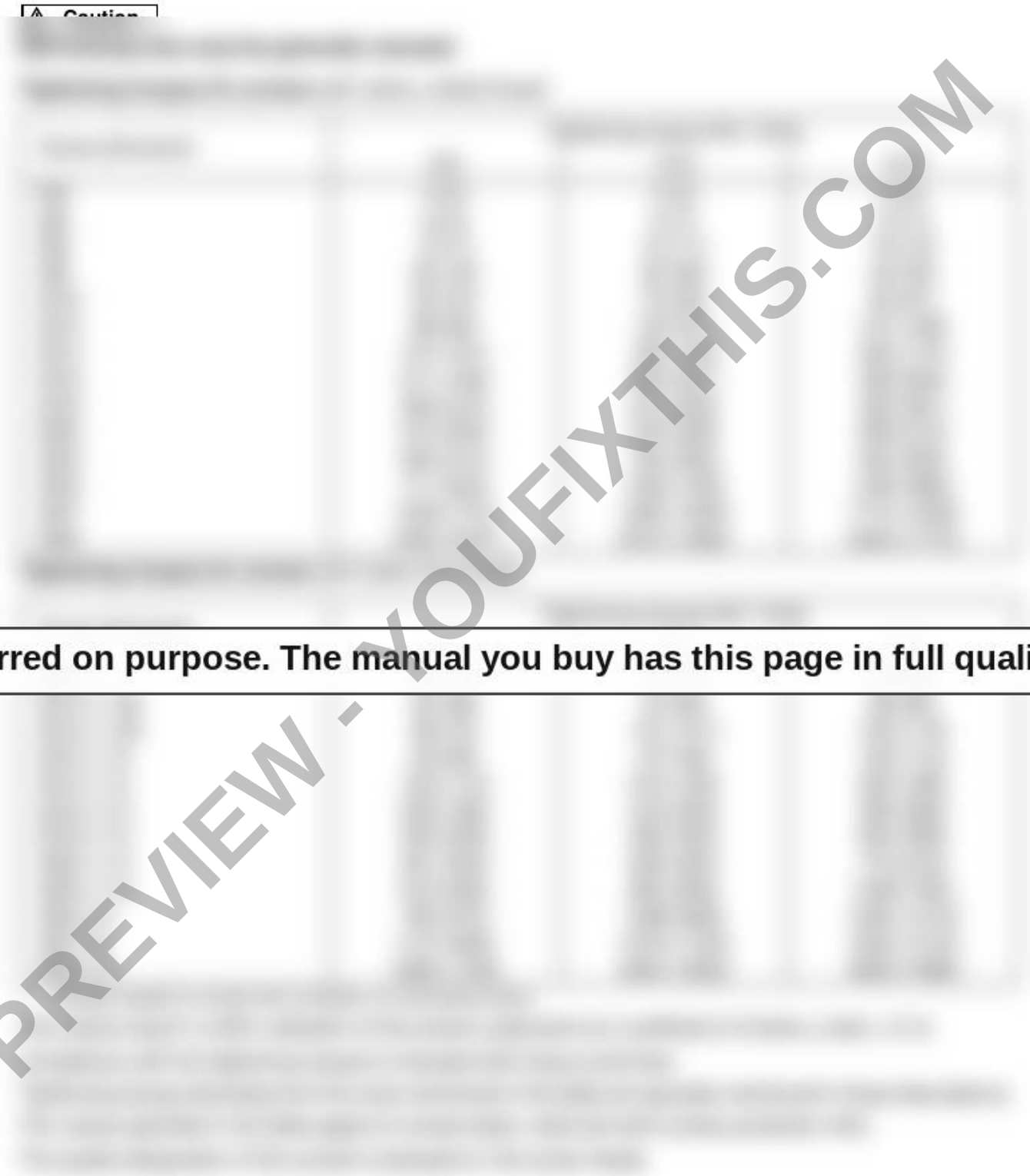

Blurred on purpose. The manual you buy has this page in full quality.

PREVIEW - YOUFIXTHIS.COM

Download full manual at youfixthis.com

Ersatzteile

Nummer	Bezeichnung
⊙ 010	Kompletter Zylinderblock
012	Kompletter Kolben Cl. 0
013	Kompletter Kolben Cl. 1
015	Reparatursatz
⊙ 026	Kompletter Nockenring
027	O-Ring
⊙ 040	Komplettes Verteilerdeckel
041	Verteilerdeckel
042	Schraube
043	Dichtungsring
044	Schraube
045	O-Ring
047	Verteiler
048	Dichtungssatz
050	Stopfen
051	O-Ring
052	Feder
053	Umschaltkolben
054	Scheibe
055	Sicherungsring
056	Feder
057	O-Ring
059	Stift
⊙ 065	Kompletter Verschlussplatte
066	Schraube
067	Dichtring
⊙ 070	Komplettes Lagerteil
071	Lagerteil
072	Innerer Lippendichtring
073	Rollenlager
074	Rollenlager
075	Scheibensatz
076	Stützring
077	Sicherungsring
078	Äußerer Dichtring
079	Abweiser
081	Dichtungsträger
087	Passfeder
090	Welle
091	Radbolzensatz
096	Bremstrommel
097	Schraube
098	Bremsseil
099	Sicherungsring
154	Komplette Bremsbacke
155	Kompletter Radzylinder
156	Gegenhalter

Spare parts list

Item	*Description*
⊙ *010*	*Cylinders-block assembly*
012	*Piston Cl 0 assembly*
013	*Piston Cl 1 assembly*
015	*Repair kit*
⊙ *026*	*Cam assembly*
027	*O-ring*
⊙ *040*	*Valving cover assembly*
041	*Valving cover part*
042	*Screw*
043	*Seal washer*
044	*Screw*
045	*O-ring*
047	*Valving*
048	*Seal kit*
050	*Plug*
051	*O-ring*
052	*Spring*
053	*Valve spool*
054	*Washer*
055	*Snap ring*
056	*Spring*
057	*O-ring*
059	*Pin*
⊙ *065*	*End cover assembly*
066	*Screw*
067	*Sealing ring*
⊙ *070*	*Bearing support assembly*
071	*Bearing support part*
072	*Radial lip seal*
073	*Roller bearing*
074	*Roller bearing*
075	*Set of shims*
076	*Thrust ring*
077	*Snap ring*
078	*Lip seal*
079	*Deflector*
081	*Seal support*
087	*Key*
090	*Shaft*
091	*Set of studs*
096	*Drum brake*
097	*Screw*
098	*Brake cable*
099	*Snap ring*
154	*Brake shoe sub-assembly*
155	*Brake cylinder sub-assembly*
156	*Brake adjustment*

PREVIEW - YOUFIXTHIS.COM

Download full manual at youfixthis.com

General **5**

1.1 Foreword 6
1.2 Safety regulations 7
1.3 General repair instructions 9
1.4 Tightening torques 11
1.5 Connection overview 12

Trouble shooting **15**

2.1 General 16
2.2 Trouble shooting diagram 17

Drum **37**

3.1 Special tools 38
3.2 Repair overview for drum 40
3.3 Removing and installing the drum 41
3.4 Changing the rubber buffers 46
3.5 Repairing the drum 47
3.6 Dismantling, assembling the change-over weights 59

Oscillating articulated joint **63**

4.1 Repair overview oscillating articulated joint 64
4.2 Removing and assembling the crabwalk cylinder 66
4.3 Removing and installing the oscillating articulated joint 67
4.4 Dismantling the oscillating articulated joint 70
4.5 Assembling the oscillating articulated joint 72

Suppliers documentation **75**

5.1 A4VG 77
5.2 A4FM28 123
5.3 MS/MSE 02 to 18 145

PREVIEW - YOUFIXTHIS.COM

Download full manual at youfixthis.com

PREVIEW - YOUFIXTHIS.COM

Download full manual at youfixthis.com

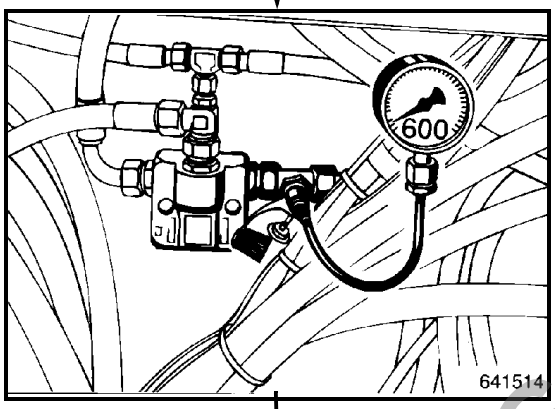

Check the steering/ charge pump

- install a 600 bar pressure gauge to the steering pressure test port
- crank the engine with the starter
- turn the steering to one end stop
- read the pressure gauge

Nominal value: approx. 140 ... 160 bar (battery fully charged)

Steering pressure OK?

no → Replace the steering/ charge pump

yes

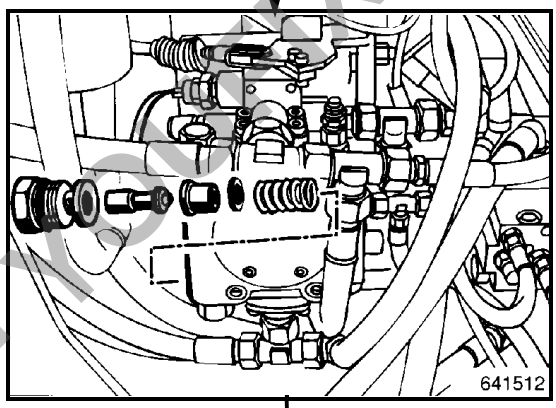

Check the charge pressure relief valve

- unscrew the plug
- take the valve insert out

Valve OK?

no → Replace the charge pressure relief valve

yes

Operating pressure OK?

yes → Starting pressure OK?

yes

no

no, to high

PREVIEW - YOUFIXTHIS.COM

Download full manual at youfixthis.com

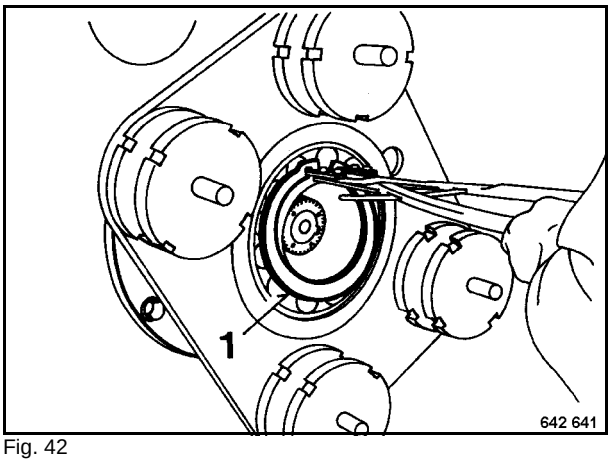

Fig. 42

23. Attach the lifting tackle to the bearing cover.

    Special tools:

    Holder for bearing cover on vibration side.

    ⚠ Caution

    Danger of squashing!

    Do not stand or step under loads being lifted.

24. Attach the bearing cover to the bearing housing and lock with circlip 1 (Fig. 42).

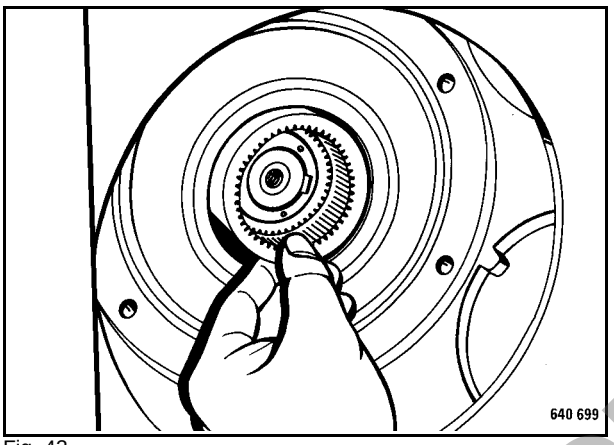

Fig. 43

25. Attach coupling sleeve to coupling pinion (Fig. 43).

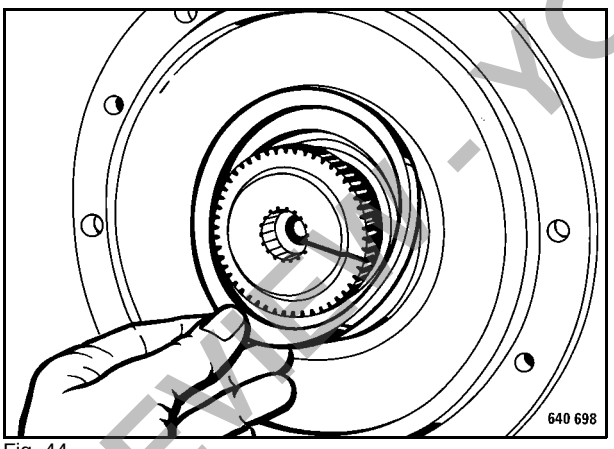

Fig. 44

26. Insert V-ring 1 (Fig. 44) into the flanged cover.

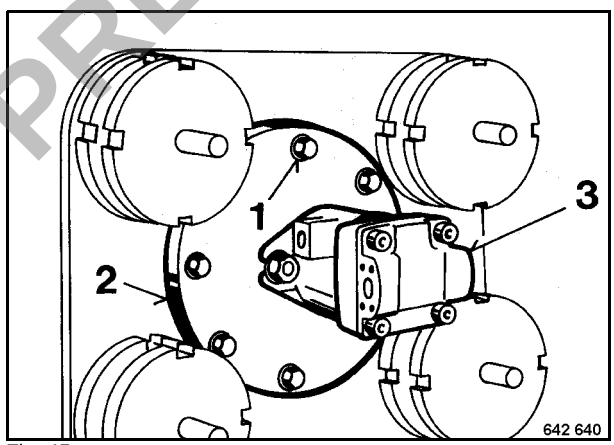

Fig. 45

27. Insert the drive pinion of vibration motor 3 (Fig. 45) into the coupling sleeve.
28. Fasten flanged cover (2) on the bearing cover with fastening screws (1).

PREVIEW - YOUFIXTHIS.COM

Download full manual at youfixthis.com

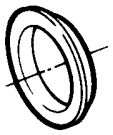

1 Dichtsatz für Triebwelle.

Seal kit for drive shaft.

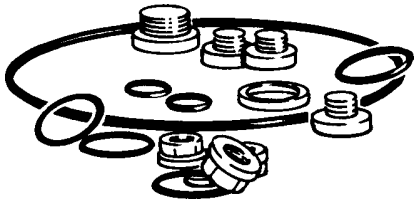

2 Äußerer Dichtsatz.

External seal kit.

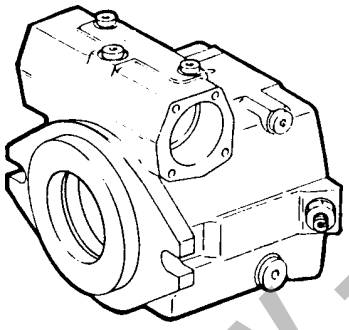

3 Gehäuse

Housing

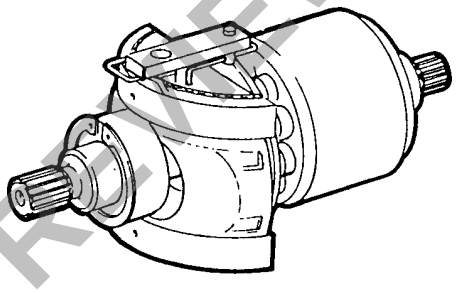

4 Triebwerk komplett.

Complete rotary group.

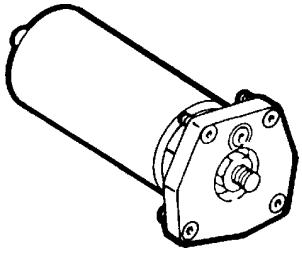

5 Stellkolben

Positioning piston

PREVIEW - YOUFIXTHIS.COM

Download full manual at youfixthis.com

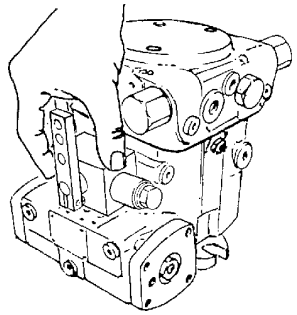

99 Ansteuergerät montieren.

Mount control module.

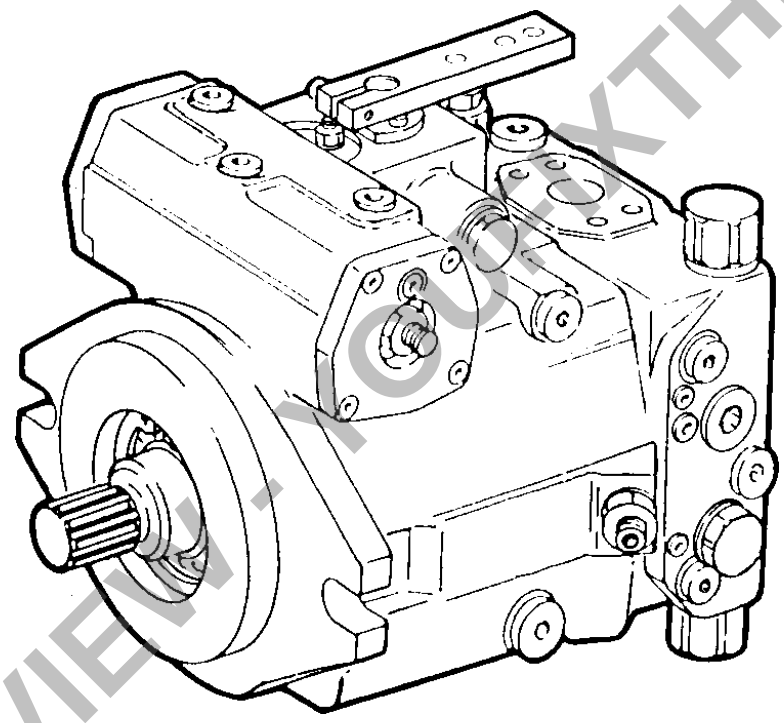

100

PREVIEW - YOUFIXTHIS.COM

Download full manual at youfixthis.com

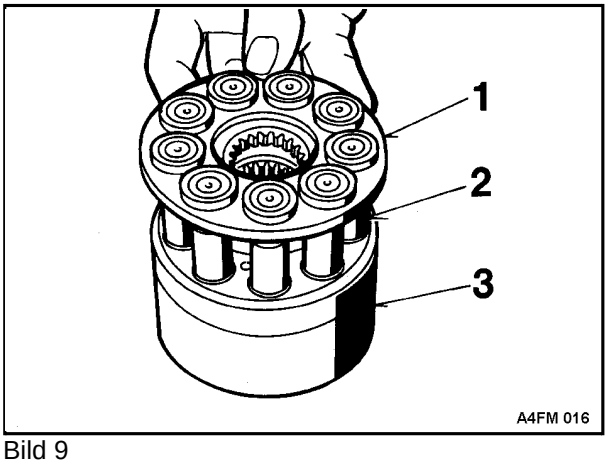

Bild 9

14. Kolben 2 (Bild 9) aus dem Zylinder (3) ziehen und aus der Rückzugplatte (1) herausnehmen.

15. Rückzugkugel mit Paßscheibe und Tellerfedern abnehmen.

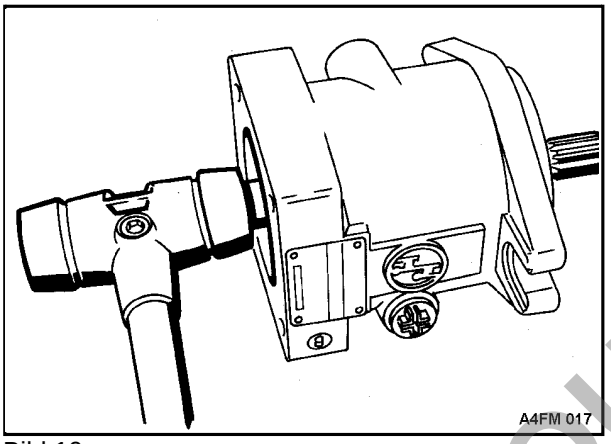

Bild 10

16. Triebwelle mit leichten Hammerschlägen aus dem Gehäuse treiben (Bild 10).

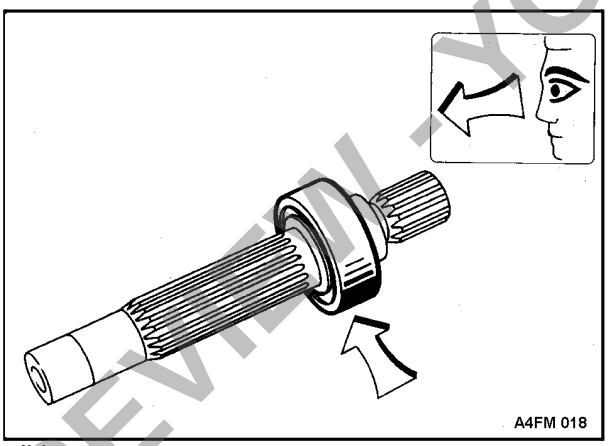

Bild 11

17. Zylinderrollenlager prüfen (Bild 11), ggf. neues mit 80 ˚C aufsetzen.

Gefahr

Verbrennungsgefahr!

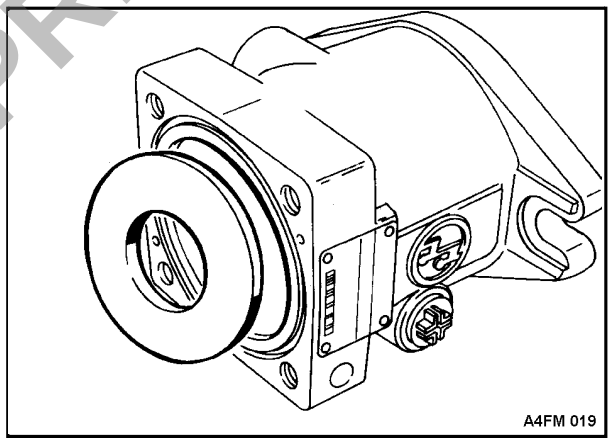

Bild 12

18. Gleitplatte aus dem Gehäuse nehmen (Bild 12).

PREVIEW - YOUFIXTHIS.COM

Download full manual at youfixthis.com

Auswechseln der Bremsbacken

Replacing the brake shoes.

Vor der Demontage kann man die Abnutzung der Bremsbeläge durch die Inspektionsöffnungen kontrollieren.

Before disassembling it is possible to make a visual checking of the brake pads wear via the inspection ports.

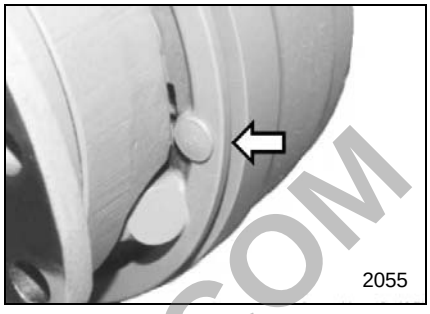

Demontage

Disassembly

Das Auswechseln des Bremsbacken und das Schleifen der Trommeln muß auf allen Motoren der gleichen Achse vorgenommen werden.

The same repairs should be made on each motor of the same axle when replacing shoes and brake drums.

- Befestigungsmuttern der Felge lösen.
- Maschine auf der Höhe der auszubauenden Felge hochheben.
- Rad abnehmen (Reifen).
- Mechanische Bremse lösen.

- *Loosen the wheel rim retaining nuts.*
- *Raise the machine on the side of the wheel rim to be removed.*
- *Remove the wheel rim (tyre).*
- *Release the mechanical brake.*

- Trommel (096) abziehen.

- *Extract the drum (096).*

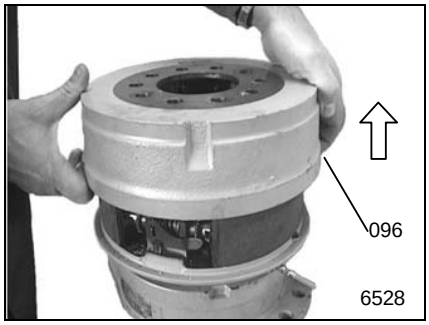

Reibfläche der Trommel überprüfen, die weder tiefe Rillen (tiefer als 0,2 mm) noch abnormale Abnutzungserscheinungen aufweisen darf, sonst muß sie geschliffen werden. (Ra 1,6 bis 3,2)

Check the friction surface condition of the drum which should show no deep scratches (deeper than 0,2 mm [0.0078 in]) nor abnormal wear. Otherwise, the brake drum should be replaced. (Ra 1.6 to 3.2)

PREVIEW - YOUFIXTHIS.COM

Download full manual at youfixthis.com

PREVIEW ONLY

You're viewing 12 of 196 pages

The full manual includes:

- All 196 pages, complete
- Searchable PDF (find any keyword)
- No watermarks
- Instant download
- Print-ready quality

GET FULL MANUAL NOW

Bomag BW 161 AD-2, BW 202 AD-2 Repair Manual

Scan or click anywhere
youfixthis.com

Click anywhere on this page to get the full manual