9.4 Engine faults

Fault	Possible cause	Remedy
Engine does not start	Fuel tank empty	Refuel, bleed the fuel system
	Fuel filter clogged, in winter due to paraffin separation	Change the fuel filter, use winter fuel
	Fuel lines leaking	Check all line connections for leaks and tighten the fittings, bleed the fuel system
	Battery not charged or not connected	Tighten the terminal clamps on the battery, check all cable connections.
	Starter defective	Have examined by a specialist
Poor starting of engine or engine works irregularly with poor power	Battery power too low, terminal clamps loose or oxidized causing the starter to turn too slowly	Check the battery charge condition, clean the terminal clamps, tighten and cover them with acid-free grease
	Fuel supply too low, fuel system clogged by paraffin separation during winter	Replacing the fuel filter Check all line connections for leaks and tighten the fittings, bleed the fuel system Use winter fuel in winter
	Engine oil with wrong SAE viscosity class	Change the engine oil
	Air filter dirty	Clean, replace if necessary
	Turbo charger defective	Have examined by a specialist
Excessive exhaust smoke	Engine oil level too high	Check, drain off if necessary
	Air filter dirty	Clean, replace if necessary
	Poor compression because of burned or broken compression rings	Have examined by a specialist

PREVIEW - YOUFIXTHIS.COM

Download full manual at youfixthis.com

8.6 Maintenance Table

No.	Maintenance works	Page
	Every 50 operating hours	
8.7.1	*Checking radiator hoses and hose clamps*	*213*
8.7.2	*Checking, cleaning the water separator*	*213*
	Every 250 operating hours	
8.8.1	*Check the air intake lines*	*215*
8.8.2	*Checking radiator hoses and hose clamps*	*215*
8.8.3	*Service the belt drive*	*216*
8.8.4	*Cleaning the radiator module*	*219*
8.8.5	*Checking the oil level in the travel gear*	*221*
8.8.6	*Lubricating the pivot bearing*	*222*
8.8.7	*Check the parking brake*	*223*
	Every 500 operating hours	
8.9.1	*Change engine oil and oil filter cartridge*	*224*
8.9.2	*Replacing the fuel filter, bleeding the fuel system*	*227*
8.9.3	*Replacing the belts*	*230*
8.9.4	*Checking the anti-freeze concentration and the condition of the coolant*	*232*
8.9.5	*Checking the hydraulic lines*	*232*
8.9.6	*Servicing the battery, checking the main battery shutoff*	*234*
8.9.7	*Checking the oil level in the exciter shaft tube*	*235*
8.9.8	*Servicing the air conditioning system*	*236*
8.9.9	*Replacing the bypass filter*	*239*
	Every 1000 operating hours	
8.10.1	*Checking, adjusting the valve clearance*	*241*
8.10.2	*Checking the lines on the diesel engine*	*241*
8.10.3	*Checking the exhaust manifold*	*241*
8.10.4	*Checking the engine mounts*	*242*

PREVIEW: YOUFIXTHIS.COM

Download full manual at youfixthis.com

6.1 Setting up the work place

1. Drive the machine onto level and firm ground.

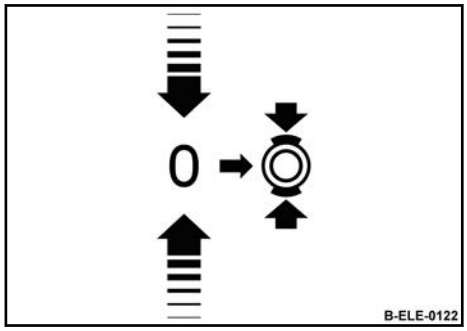

Fig. 99

2. To stop the machine return the travel lever to “Middle” position and shift it to the right to lock (parking brake position).

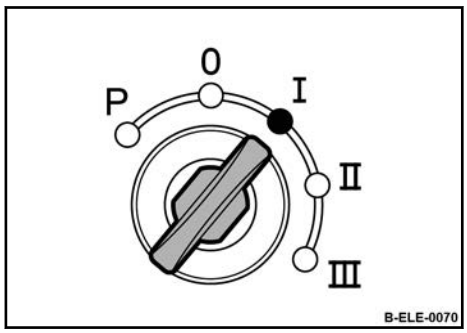

Fig. 100

3. Turn the ignition key to position “I”.

NOTICE!

Danger of engine damage!

– Do not shut down the engine all of a sudden from full load speed, but let it idle for about two minutes.

PREVIEW - YOUFIXTHIS.COM

Download full manual at youfixthis.com

4.1 Driver's stand

4.1.1 LC-Display unit

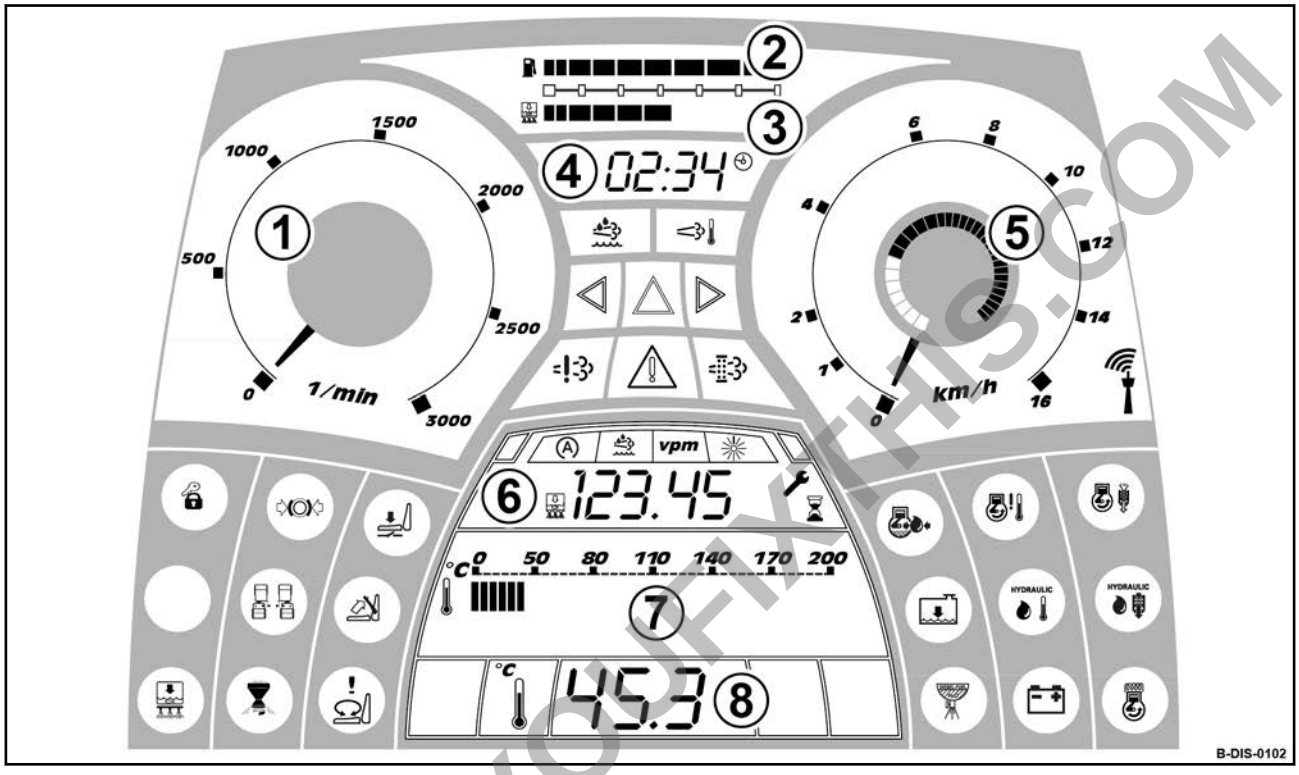

Fig. 35

1 Engine rpm-meter
2 Fuel level gauge
3 Water level gauge
4 Time
5 Indication of travel speed and pre-selected speed limitation (green ring segment)
6 INFO 1 display field
7 Asphalt temperature display
8 INFO 2 display field

PREVIEW - YOUFIXTHIS.COM

Download full manual at youfixthis.com

Table of contents

1 Introduction **11**
1.1 Foreword **12**
1.2 Machine type plate and engine type plate **14**
2 Technical data **15**
2.1 Noise and vibration data **19**
2.1.1 Noise data 19
2.1.2 Vibration data 19
3 Concerning your safety **21**
3.1 General prerequisites **22**
3.1.1 General 22
3.1.2 Explanation of signal words used: 23
3.1.3 Personal protective equipment 24
3.1.4 Intended use 25
3.1.5 Improper use 25
3.2 Definition of responsible persons **27**
3.2.1 Operating company 27
3.2.2 Expert / qualified person 27
3.2.3 Driver / operator 28
3.3 Fundamentals for safe operation **29**
3.3.1 Remaining dangers, remaining risks 29
3.3.2 Regular safety inspections 29
3.3.3 Modifications and alterations to the machine 29
3.3.4 Damage, defects, misuse of safety devices 30
3.3.5 Roll Over Protective Structure (ROPS) 30
3.4 Handling fuels and lubricants **32**
3.4.1 Preliminary remarks 32
3.4.2 Safety regulations and environmental protection regulations for handling diesel fuel 33
3.4.3 Safety regulations and environmental protection regulations for handling oil 35
3.4.4 Safety regulations and environmental protection regulations for handling hydraulic oil 37
3.4.5 Safety regulations and environmental protection regulations for handling coolants 39

PREVIEW - YOUFIXTHIS.COM

Download full manual at youfixthis.com

3.1.2 Explanation of signal words used:

DANGER!
Danger to life if failing to comply!
Sections marked accordingly indicate an extremely dangerous situation that could lead to fatal or severe injuries, if this warning is disregarded.

WARNING!
Danger to life or danger of severe injuries if failing to comply!
Sections marked accordingly indicate a dangerous situation that could lead to fatal or severe injuries, if this warning is disregarded.

CAUTION!
Danger of injury if failing to comply!
Sections marked accordingly indicate a dangerous situation that could lead to fatal or severe injuries, if this warning is disregarded.

NOTICE!
Danger of material damage if failing to comply!
Sections marked accordingly indicate possible dangers for machines or components.

PREVIEW - YOUFIXTHIS.COM

Download full manual at youfixthis.com

3.4.6 Safety regulations and environmental protection regulations for handling battery acid ... 41
3.5 Loading / transporting the machine ... 43
3.6 Start-up procedure ... 45
3.6.1 Prior to starting up ... 45
3.6.2 Starting the engine ... 46
3.6.3 Starting the engine with jump leads ... 46
3.7 Driving the machine, working operation ... 47
3.7.1 Persons in the danger area ... 47
3.7.2 Driving the machine ... 47
3.7.3 Driving on gradients and slopes ... 48
3.7.4 Cross slope ... 49
3.7.5 Working with vibration/oscillation ... 49
3.7.6 Working with the precision spreader ... 49
3.7.7 Parking the machine ... 50
3.8 Refuelling ... 52
3.9 Regeneration of exhaust gas aftertreatment system ... 53
3.10 Emergency procedures ... 54
3.10.1 Actuating the emergency stop switch ... 54
3.10.2 Disconnecting the battery ... 54
3.10.3 Towing the machine ... 54
3.11 Maintenance work ... 56
3.11.1 Preliminary remarks ... 56
3.11.2 Work on hydraulic lines ... 56
3.11.3 Working on the engine ... 57
3.11.4 Maintenance work on electric components and battery ... 58
3.11.5 Working on the air conditioning ... 58
3.11.6 Cleaning work ... 58
3.11.7 After maintenance work ... 59
3.12 Repair ... 60
3.13 Signage ... 61
4 Indicators and control elements ... 71
4.1 Driver's stand ... 72
4.1.1 LC-Display unit ... 72
4.1.2 Operating console ... 78

PREVIEW - YOUFIXTHIS.COM

Download full manual at youfixthis.com

- pull off the main battery switch,
- secure the machine against unauthorized use.

Do not jump off the machine, but use hand grips and access steps.

Mark machines, which could be in the way, with a clearly visible sign.

When parking on ascents or descents use appropriate means to secure the machine against rolling.

PREVIEW - YOUFIXTHIS.COM

Download full manual at youfixthis.com

4.2.2.3 Rotary switch for air conditioning

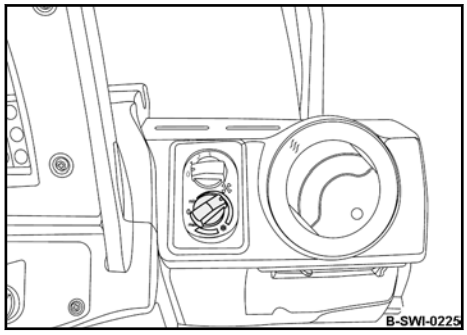

Fig. 77

Position “0”	Air conditioning off
Between “min” / “max”	Air conditioning control segment

Optional equipment

The air conditioning only works when the engine is running and the fan is switched on.

4.2.3 12 V DIN socket

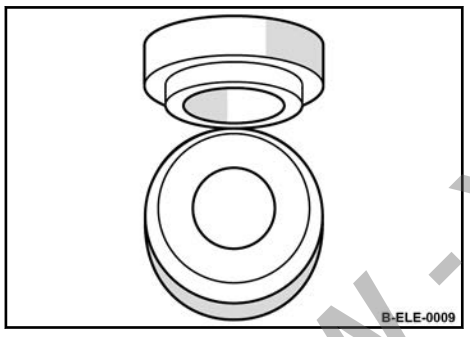

Fig. 78

Permanent current, loadable up to 15 A.

There are two sockets in the cabin next to the central electrics.

Both sockets together are loadable up to 15 A.

PREVIEW - YOUFIXTHIS.COM

Download full manual at youfixthis.com

6.5.4 Vibration/oscillation in automatic mode

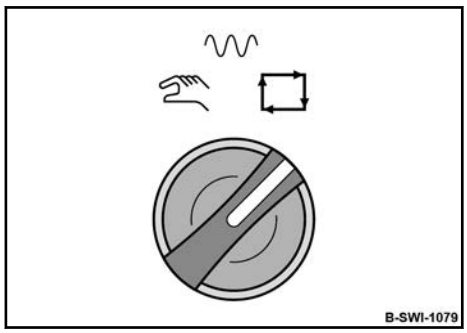

Fig. 131

1. Turn the rotary switch for vibration mode to position “Right".

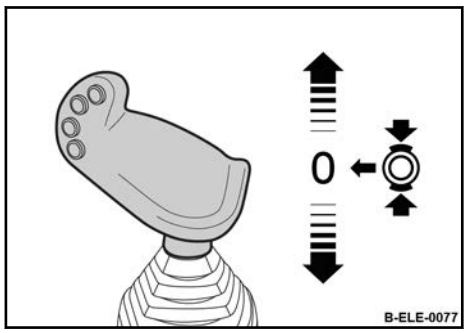

Fig. 132

2. Shift the travel lever slowly in the desired travel direction.
   ⇨ Vibration/oscillation is switched on at a slow travel speed.
3. To switch off vibration, return the travel lever towards “Middle” position.
   ⇨ Vibration/oscillation switches off when falling below the slow travel speed.

6.5.5 Stop working with vibration/oscillation

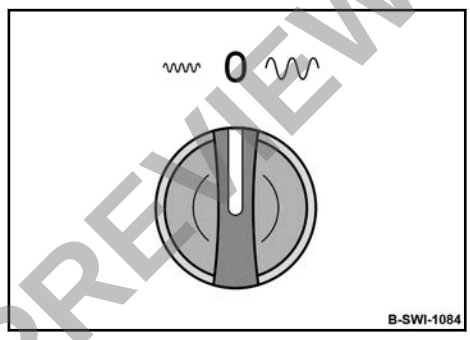

Fig. 133

1. Switch vibration/oscillation off.
2. Turn the rotary switch for vibration pre-selection to position “Middle”.

PREVIEW - YOUFIXTHIS.COM

Download full manual at youfixthis.com

PREVIEW - YOUFIXTHIS.COM

Download full manual at youfixthis.com

8.10 Every 1000 operating hours

8.10.1 Checking, adjusting the valve clearance

This work must only be performed by authorized service personnel.

8.10.2 Checking the lines on the diesel engine

This work must only be performed by authorized service personnel.

Perform this maintenance work at the latest after one year.

Check the following lines:

- Lines of the exhaust gas recirculation system,
- DPF-lines,
- lines of the lubrication system.

8.10.3 Checking the exhaust manifold

This work must only be performed by authorized service personnel.

Perform this maintenance work at the latest after one year.

PREVIEW - YOUFIXTHIS.COM

Download full manual at youfixthis.com

PREVIEW ONLY

You're viewing 12 of 292 pages

The full manual includes:

- All 292 pages, complete
- Searchable PDF (find any keyword)
- No watermarks
- Instant download
- Print-ready quality

GET FULL MANUAL NOW

Bomag BW 174 APO-4i Operator Manual

Scan or click anywhere
youfixthis.com

Click anywhere on this page to get the full manual