6.3 Starting the engine

Prerequisites:

- Main battery switch switched on
- Emergency stop switch unlocked
- Travel lever in position “Middle right”(parking brake closed)

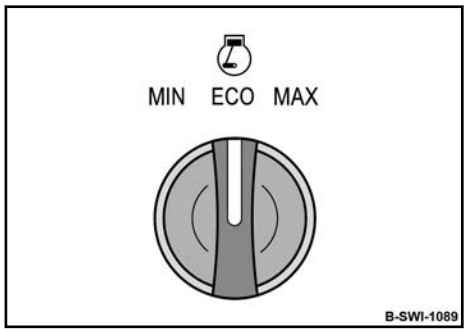

Fig. 69

1. Turn the rotary switch for engine speed to position “Middle” (ECO-mode).

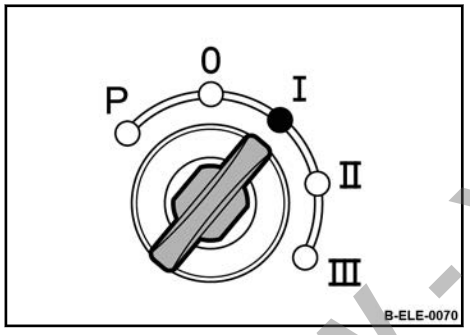

Fig. 70

2. Turn the ignition key to position “I”.

⇨ All control and warning lamps in the instrument cluster light up for a moment.

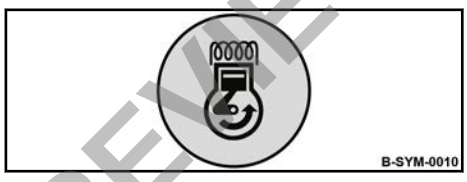

Fig. 71

3. If the preheating control lamp lights up, wait until it goes out before you start the engine.

PREVIEW - YOUFIXTHIS.COM

Download full manual at youfixthis.com

8.6 Maintenance Table

No.	Maintenance works	Page
	Every 250 operating hours	
8.7.1	*Cleaning the radiator module*	*167*
8.7.2	*Checking, tensioning the V-belt for the generator system*	*168*
8.7.3	*Checking the oil level in the drive axle*	*170*
8.7.4	*Checking the oil level in the drive axle reduction gear*	*171*
8.7.5	*Checking the oil level in the wheel hubs*	*172*
8.7.6	*Checking the oil level in the exciter housing*	*173*
8.7.7	*Checking the oil level in the drum drive reduction gear*	*174*
8.7.8	*Changing the fresh air filter in the cabin*	*175*
8.7.9	*Check the parking brake*	*176*
	Every 500 operating hours	
8.8.1	*Change engine oil and oil filter cartridge*	*177*
8.8.2	*Replacing the fuel filter, bleeding the fuel system*	*179*
8.8.3	*Checking the anti-freeze concentration and the condition of the coolant*	*182*
8.8.4	*Checking the hydraulic lines*	*182*
8.8.5	*Servicing the battery, checking the main battery isolation*	*184*
8.8.6	*Servicing the air conditioning system*	*185*
	Every 1000 operating hours	
8.9.1	*Checking the ribbed V-belt*	*189*
8.9.2	*Replacing the air conditioning compressor V-belts*	*191*
8.9.3	*Checking the engine mounts*	*192*
8.9.4	*Replacing the hydraulic oil filter*	*193*
8.9.5	*Change the oil in the drive axle*	*195*
8.9.6	*Change the oil in the drum drive reduction gear*	*196*

PREVIEW - YOUFIXTHIS.COM

Download full manual at youfixthis.com

9.1 Preliminary remarks

Malfunctions are frequently caused by incorrect operation of the machine or insufficient maintenance. Whenever a fault occurs you should therefore thoroughly read these instructions on correct operation and maintenance.

If you cannot locate the cause of a fault or rectify it yourself by following the trouble shooting chart, you should contact our customer service department.

PREVIEW - YOUFIXTHIS.COM

Download full manual at youfixthis.com

Table of contents

1 Introduction **9**
1.1 Foreword **10**
1.2 Machine type plate and engine type plate **12**
2 Technical data **13**
2.1 Noise and vibration data **16**
2.1.1 Noise data 17
2.1.2 Vibration data 17
3 Concerning your safety **19**
3.1 General prerequisites **20**
3.1.1 General 20
3.1.2 Explanation of signal words used: 21
3.1.3 Personal protective equipment 22
3.1.4 Intended use 23
3.1.5 Improper use 23
3.2 Definition of responsible persons **25**
3.2.1 Operating company 25
3.2.2 Expert / qualified person 25
3.2.3 Driver / operator 26
3.3 Fundamentals for safe operation **27**
3.3.1 Remaining dangers, remaining risks 27
3.3.2 Regular safety inspections 27
3.3.3 Modifications and alterations to the machine 27
3.3.4 Damage, defects, misuse of safety devices 28
3.3.5 Roll Over Protective Structure (ROPS) 28
3.4 Handling fuels and lubricants **30**
3.4.1 Preliminary remarks 30
3.4.2 Safety regulations and environmental protection regulations for handling diesel fuel 31
3.4.3 Safety regulations and environmental protection regulations for handling oil 33
3.4.4 Safety regulations and environmental protection regulations for handling hydraulic oil 35
3.4.5 Safety regulations and environmental protection regulations for handling coolants 37

PREVIEW - YOUFIXTHIS.COM

Download full manual at youfixthis.com

3.1.2 Explanation of signal words used:



DANGER!

Danger to life if failing to comply!

Sections marked accordingly indicate an extremely dangerous situation that could lead to fatal or severe injuries, if this warning is disregarded.



WARNING!

Danger to life or danger of severe injuries if failing to comply!

Sections marked accordingly indicate a dangerous situation that could lead to fatal or severe injuries, if this warning is disregarded.



CAUTION!

Danger of injury if failing to comply!

Sections marked accordingly indicate a dangerous situation that could lead to fatal or severe injuries, if this warning is disregarded.



NOTICE!

Danger of material damage if failing to comply!

Sections marked accordingly indicate possible dangers for machines or components.

PREVIEW - YOUFIXTHIS.COM

Download full manual at youfixthis.com

3.4.6 Safety regulations and environmental protection regulations for handling battery acid ... 39
3.5 Load/transport the machine ... 41
3.6 Start-up procedure ... 43
3.6.1 Prior to starting up ... 43
3.6.2 Starting the engine ... 44
3.6.3 Starting the engine with jump leads ... 44
3.7 Driving the machine, working operation ... 45
3.7.1 Persons in the danger area ... 45
3.7.2 Driving the machine ... 45
3.7.3 Driving on gradients and slopes ... 46
3.7.4 Cross-slope ... 47
3.7.5 Working with vibration ... 47
3.7.6 Parking the machine ... 47
3.8 Refuelling ... 49
3.9 Emergency procedures ... 50
3.9.1 Actuating the emergency stop switch ... 50
3.9.2 Disconnecting the battery ... 50
3.9.3 Towing the machine ... 50
3.10 Maintenance work ... 52
3.10.1 Preliminary remarks ... 52
3.10.2 Work on hydraulic lines ... 52
3.10.3 Working on the engine ... 53
3.10.4 Maintenance work on electric components and battery ... 54
3.10.5 Working on the air conditioning ... 55
3.10.6 Working on wheels and tyres ... 55
3.10.7 Cleaning work ... 55
3.10.8 After maintenance work ... 56
3.11 Repair ... 57
3.12 Stickers and signage ... 58
4 Indicators and control elements ... 65
4.1 Driver's stand ... 66
4.1.1 Instrument cluster ... 66
4.1.2 Operating console ... 70
4.1.3 Arm console ... 75

PREVIEW - YOUFIXTHIS.COM

Download full manual at youfixthis.com

3.4.5 Safety regulations and environmental protection regulations for handling coolants

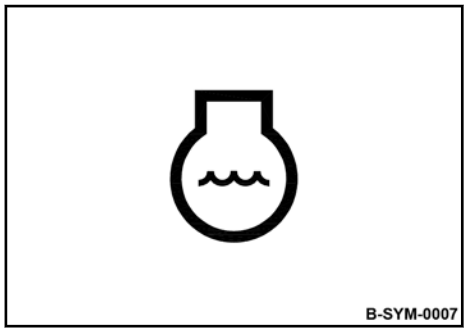

Fig. 7

WARNING!
Danger of scalding by hot fluid!
– Open the compensation tank only when the engine is cold.
– Wear your personal protective equipment (protective gloves, protective clothing, goggles).

CAUTION!
Health hazard caused by contact with coolant and coolant additives!
– Wear your personal protective equipment (protective gloves, protective clothing).
– Do not inhale any fumes.
– Avoid contact.

CAUTION!
Danger of slipping on spilled coolant!
– Immediately bind spilled coolant with an oil-binding agent.

ENVIRONMENT!
Coolant is an environmentally hazardous substance!
– Always keep coolant and coolant additives in proper containers.

» Continued on the next page

PREVIEW - YOUFIXTHIS.COM

Download full manual at youfixthis.com

4.1.2.1 Emergency stop switch

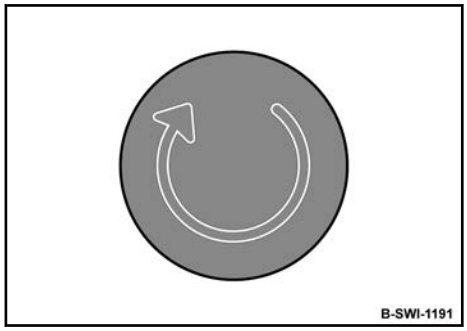

Fig. 31

press	In events of emergency and in case of danger actuate the emergency stop switch immediately by pressing it fully down. It automatically locks in end position. The machine will be braked immediately. The engine is shut down.
switch off/ unlock	Turn the Emergency Stop switch clockwise and let it go.

NOTICE!

In case of frequent use the wear on the multi-discs brakes will be very high.

– Do not use the emergency stop switch as service brake!

4.1.2.2 Rotary switch for working lights

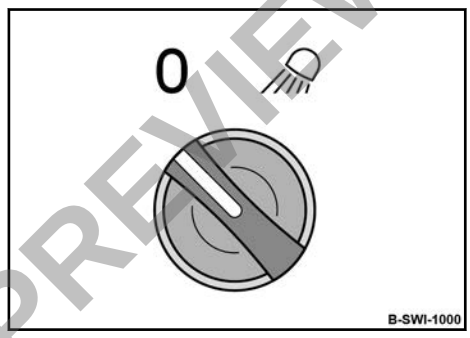

Fig. 32

Position “Left”	Working lights off
Position “Right”	Working lights on

Optional equipment

PREVIEW - YOUFIXTHIS.COM

Download full manual at youfixthis.com

7.2 Loading the machine

Use only stable loading ramps of sufficient load bearing capacity.

Loading ramps and transport vehicle must be free of grease, oil, snow and ice.

The ramp inclination must be less than the gradability of the machine.

Make sure that any persons keep a safety distance of at least 2 meters while the machine is driven onto the transport vehicle. The instructing person should not be inside the travel range of the machine.

Position of centre of gravity

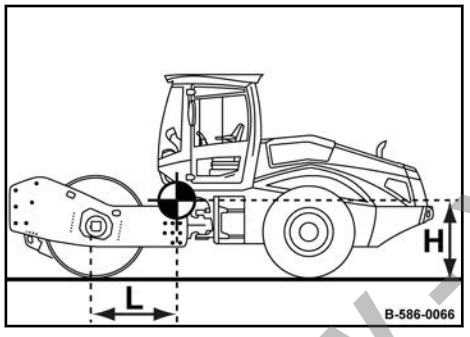

Fig. 130

Distance from middle of drum	Height
1050 ± 240 mm	1030 ± 60 mm
41.3 ± 9.4 in	40.6 ± 2.4 in

DANGER!

Danger to life caused by the machine slipping or turning over!

– Make sure that no persons are in the danger zone.

PREVIEW - YOUFIXTHIS.COM

Download full manual at youfixthis.com

6. Change the oil in both wheel hubs.

8.7.6 Checking the oil level in the exciter housing

NOTICE!
Components may get damaged!
– Use only gear oil of the permitted specification ↳ *Chapter 8.3.5 „Gear oil SAE 75W-90“ on page 159*.

Protective equipment:
- Working clothes
- Protective gloves

1. Before checking the oil level, run the machine warm with vibration for about 1/2 hour.
2. Move the drum, until the oil level inspection plug is in bottom position.
3. Park the machine in secured condition ↳ *Chapter 6.7 „Parking the machine in secured condition“ on page 125*.
4. Clean the area around the level inspection plug and unscrew the plug.
   ⇨ The oil level must reach the bottom edge of the level bore.

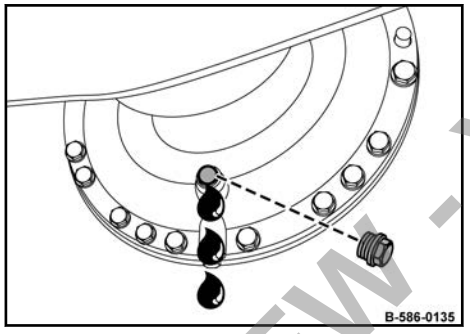

Fig. 149

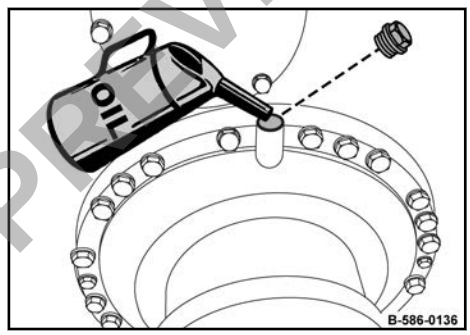

Fig. 150

5. Clean the area around the filler plug and unscrew the filler plug.
6. Fill in oil through the filler bore, until it starts to run out through the level inspection bore.
8. Retighten the filler and level inspection plugs.
9. Repeat this inspection on the other side.
10. If a loss of oil is found, perform trouble shooting, repair the drum if necessary.

PREVIEW - YOUFIXTHIS.COM
Download full manual at youfixthis.com

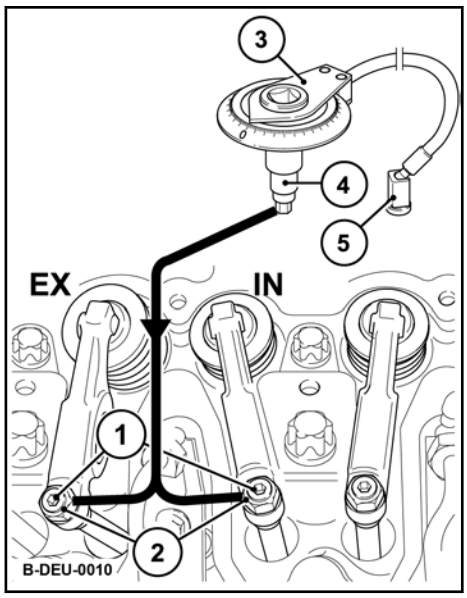

Fig. 190

1 Valve adjustment screw
2 Counter nut
3 Rotation angle disc
4 Socket
5 Magnet

5. Loosen counter nut (2).

7. Attach the rotation angle disc (3) and the spanner socket (4) to the valve clearance adjustment screw (1).

8. Fix the magnet (5) of the rotation angle disc.

9. Turn the rotation angle disc (3) clockwise against the stop (rocker arm no clearance) and set the scale to zero.

10. Turn the rotation angle disc (3) counter-clockwise, until the specified angle is reached.

11. Hold the rotation angle disc tight, so that it does not turn, and tighten counter nut (2), tightening torque: 20 Nm (15 ft·lbf).

12. Repeat this adjustment procedure on all other cylinders, after cranking the crank-shaft accordingly.

13. Install the cylinder head cover again with a new gasket.

⇨ Tightening torque: 9 Nm (7 ft·lbf)

14. After a short test run check the engine for leaks.

8.10.2 Changing the hydraulic oil

Perform this maintenance work at the latest after two years.

The hydraulic oil must also be changed after major repairs in the hydraulic system.

Always replace the hydraulic oil filter after each hydraulic oil change. Change the hydraulic oil filter only after the hydraulic oil change and after the test run.

PREVIEW - YOUFIXTHIS.COM

Download full manual at youfixthis.com

PREVIEW ONLY

You're viewing 11 of 244 pages

The full manual includes:

- All 244 pages, complete
- Searchable PDF (find any keyword)
- No watermarks
- Instant download
- Print-ready quality

GET FULL MANUAL NOW

Bomag BW 226 BVC-5 Operator Manual

Scan or click anywhere
youfixthis.com

Click anywhere on this page to get the full manual