Foreword - Important notice regarding equipment servicing

All repair and maintenance work listed in this manual must be carried out only by qualified dealership personnel, strictly complying with the instructions given, and using, whenever possible, the special tools.

Anyone who performs repair and maintenance operations without complying with the procedures provided herein shall be responsible for any subsequent damages.

The manufacturer and all the organizations of its distribution chain, including - without limitation - national, regional, or local dealers, reject any responsibility for damages caused by parts and/or components not approved by the manufacturer, including those used for the servicing or repair of the product manufactured or marketed by the manufacturer. In any case, no warranty is given or attributed on the product manufactured or marketed by the manufacturer in case of damages caused by parts and/or components not approved by the manufacturer.

The manufacturer reserves the right to make improvements in design and changes in specifications at any time without notice and without incurring any obligation to install them on units previously sold. Specifications, descriptions, and illustrative material herein are as accurate as known at time of publication but are subject to change without notice.

In case of questions, refer to your CASE CONSTRUCTION Sales and Service Networks.

PREVIEW - YOUFIXTHIS.COM

Download full manual at youfixthis.com

Engine - 10

Engine and crankcase - 001

1150M Long Track (LT) - Tier 4A (interim) and Stage IIIB [NFC105000 -], 1150M Long Track (LT) [NCDC11500 -], 1150M Long Track (LT) [NDDC11000 -], 1150M Long Track (LT) [NEDC11000 -], 1150M Long Track (LT) [NFDC11000 -], 1150M Wide Track (WT) / Low Ground Pressure (LGP) [NCDC11500 -], 1150M Wide Track (WT) / Low Ground Pressure (LGP) [NDDC11000 -], 1150M Wide Track (WT) / Low Ground Pressure (LGP) [NEDC11000 -], 1150M Wide Track (WT) / Low Ground Pressure (LGP) [NFDC11000 -], 1150M Wide Track (WT) / Low Ground Pressure (LGP) - Tier 4A (interim) and Stage IIIB [NFC105000 -]

PREVIEW - YOUFIXTHIS.COM

Download full manual at youfixthis.com

Hydrostatic drive - 29

Pump and motor components - 218

1150M Long Track (LT) - Tier 4A (interim) and Stage IIIB [NFC105000 -], 1150M Long Track (LT) [NCDC11500 -], 1150M Long Track (LT) [NDDC11000 -], 1150M Long Track (LT) [NEDC11000 -], 1150M Long Track (LT) [NFDC11000 -], 1150M Wide Track (WT) / Low Ground Pressure (LGP) [NCDC11500 -], 1150M Wide Track (WT) / Low Ground Pressure (LGP) [NDDC11000 -], 1150M Wide Track (WT) / Low Ground Pressure (LGP) [NEDC11000 -], 1150M Wide Track (WT) / Low Ground Pressure (LGP) [NFDC11000 -], 1150M Wide Track (WT) / Low Ground Pressure (LGP) - Tier 4A (interim) and Stage IIIB [NFC105000 -]

PREVIEW - YOUFIXTHIS.COM

Download full manual at youfixthis.com

Brakes and controls - 33

Parking brake or parking lock - 110

1150M Long Track (LT) - Tier 4A (interim) and Stage IIIB [NFC105000 -], 1150M Long Track (LT) [NCDC11500 -], 1150M Long Track (LT) [NDDC11000 -], 1150M Long Track (LT) [NEDC11000 -], 1150M Long Track (LT) [NFDC11000 -], 1150M Wide Track (WT) / Low Ground Pressure (LGP) [NCDC11500 -], 1150M Wide Track (WT) / Low Ground Pressure (LGP) [NDDC11000 -], 1150M Wide Track (WT) / Low Ground Pressure (LGP) [NEDC11000 -], 1150M Wide Track (WT) / Low Ground Pressure (LGP) [NFDC11000 -], 1150M Wide Track (WT) / Low Ground Pressure (LGP) - Tier 4A (interim) and Stage IIIB [NFC105000 -]

PREVIEW - YOUFIXTHIS.COM

Download full manual at youfixthis.com

Hydraulic systems - 35

Hydraulic systems - 000

1150M Long Track (LT) - Tier 4A (interim) and Stage IIIB [NFC105000 -], 1150M Long Track (LT) [NCDC11500 -], 1150M Long Track (LT) [NDDC11000 -], 1150M Long Track (LT) [NEDC11000 -], 1150M Long Track (LT) [NFDC11000 -], 1150M Wide Track (WT) / Low Ground Pressure (LGP) [NCDC11500 -], 1150M Wide Track (WT) / Low Ground Pressure (LGP) [NDDC11000 -], 1150M Wide Track (WT) / Low Ground Pressure (LGP) [NEDC11000 -], 1150M Wide Track (WT) / Low Ground Pressure (LGP) [NFDC11000 -], 1150M Wide Track (WT) / Low Ground Pressure (LGP) - Tier 4A (interim) and Stage IIIB [NFC105000 -]

PREVIEW - YOUFIXTHIS.COM

Download full manual at youfixthis.com

Tracks and track suspension - 48

Track frame and driving wheels - 130

PREVIEW - YOUFIXTHIS.COM

1150M Long Track (LT) - Tier 4A (interim) and Stage IIIB [NFC105000 -], 1150M Long Track (LT) [NCDC11500 -], 1150M Long Track (LT) [NDDC11000 -], 1150M Long Track (LT) [NEDC11000 -], 1150M Long Track (LT) [NFDC11000 -], 1150M Wide Track (WT) / Low Ground Pressure (LGP) [NCDC11500 -], 1150M Wide Track (WT) / Low Ground Pressure (LGP) [NDDC11000 -], 1150M Wide Track (WT) / Low Ground Pressure (LGP) [NEDC11000 -], 1150M Wide Track (WT) / Low Ground Pressure (LGP) [NFDC11000 -], 1150M Wide Track (WT) / Low Ground Pressure (LGP) - Tier 4A (interim) and Stage IIIB [NFC105000 -]

Download full manual at youfixthis.com

Cab climate control - 50

Heating - 100

1150M Long Track (LT) - Tier 4A (interim) and Stage IIIB [NFC105000 -], 1150M Long Track (LT) [NCDC11500 -], 1150M Long Track (LT) [NDDC11000 -], 1150M Long Track (LT) [NEDC11000 -], 1150M Long Track (LT) [NFDC11000 -], 1150M Wide Track (WT) / Low Ground Pressure (LGP) [NCDC11500 -], 1150M Wide Track (WT) / Low Ground Pressure (LGP) [NDDC11000 -], 1150M Wide Track (WT) / Low Ground Pressure (LGP) [NEDC11000 -], 1150M Wide Track (WT) / Low Ground Pressure (LGP) [NFDC11000 -], 1150M Wide Track (WT) / Low Ground Pressure (LGP) - Tier 4A (interim) and Stage IIIB [NFC105000 -]

PREVIEW - YOUFIXTHIS.COM

Download full manual at youfixthis.com

Electrical systems - 55

Electrical system - 000

1150M Long Track (LT) - Tier 4A (interim) and Stage IIIB [NFC105000 -], 1150M Long Track (LT) [NCDC11500 -], 1150M Long Track (LT) [NDDC11000 -], 1150M Long Track (LT) [NEDC11000 -], 1150M Long Track (LT) [NFDC11000 -], 1150M Wide Track (WT) / Low Ground Pressure (LGP) [NCDC11500 -], 1150M Wide Track (WT) / Low Ground Pressure (LGP) [NDDC11000 -], 1150M Wide Track (WT) / Low Ground Pressure (LGP) [NEDC11000 -], 1150M Wide Track (WT) / Low Ground Pressure (LGP) [NFDC11000 -], 1150M Wide Track (WT) / Low Ground Pressure (LGP) - Tier 4A (interim) and Stage IIIB [NFC105000 -]

PREVIEW - YOUFIXTHIS.COM

Download full manual at youfixthis.com

Electrical systems - 55

Harnesses and connectors - 100

1150M Long Track (LT) - Tier 4A (interim) and Stage IIIB [NFC105000 -], 1150M Long Track (LT) [NCDC11500 -], 1150M Long Track (LT) [NDDC11000 -], 1150M Long Track (LT) [NEDC11000 -], 1150M Long Track (LT) [NFDC11000 -], 1150M Wide Track (WT) / Low Ground Pressure (LGP) [NCDC11500 -], 1150M Wide Track (WT) / Low Ground Pressure (LGP) [NDDC11000 -], 1150M Wide Track (WT) / Low Ground Pressure (LGP) [NEDC11000 -], 1150M Wide Track (WT) / Low Ground Pressure (LGP) [NFDC11000 -], 1150M Wide Track (WT) / Low Ground Pressure (LGP) - Tier 4A (interim) and Stage IIIB [NFC105000 -]

PREVIEW - YOUFIXTHIS.COM

Download full manual at youfixthis.com

Electrical systems - 55

Engine starting system - 201

1150M Long Track (LT) - Tier 4A (interim) and Stage IIIB [NFC105000 -], 1150M Long Track (LT) [NCDC11500 -], 1150M Long Track (LT) [NDDC11000 -], 1150M Long Track (LT) [NEDC11000 -], 1150M Long Track (LT) [NFDC11000 -], 1150M Wide Track (WT) / Low Ground Pressure (LGP) [NCDC11500 -], 1150M Wide Track (WT) / Low Ground Pressure (LGP) [NDDC11000 -], 1150M Wide Track (WT) / Low Ground Pressure (LGP) [NEDC11000 -], 1150M Wide Track (WT) / Low Ground Pressure (LGP) [NFDC11000 -], 1150M Wide Track (WT) / Low Ground Pressure (LGP) - Tier 4A (interim) and Stage IIIB [NFC105000 -]

PREVIEW - YOUFIXTHIS.COM

Download full manual at youfixthis.com

Electrical systems - 55

Warning indicators, alarms, and instruments - 408

1150M Long Track (LT) - Tier 4A (interim) and Stage IIIB [NFC105000 -], 1150M Long Track (LT) [NCDC11500 -], 1150M Long Track (LT) [NDDC11000 -], 1150M Long Track (LT) [NEDC11000 -], 1150M Long Track (LT) [NFDC11000 -], 1150M Wide Track (WT) / Low Ground Pressure (LGP) [NCDC11500 -], 1150M Wide Track (WT) / Low Ground Pressure (LGP) [NDDC11000 -], 1150M Wide Track (WT) / Low Ground Pressure (LGP) [NEDC11000 -], 1150M Wide Track (WT) / Low Ground Pressure (LGP) [NFDC11000 -], 1150M Wide Track (WT) / Low Ground Pressure (LGP) - Tier 4A (interim) and Stage IIIB [NFC105000 -]

PREVIEW - YOUFIXTHIS.COM

Download full manual at youfixthis.com

Electrical systems - 55

Selective Catalytic Reduction (SCR) electrical system - 988

1150M Long Track (LT) - Tier 4A (interim) and Stage IIIB [NFC105000 -], 1150M Long Track (LT) [NCDC11500 -], 1150M Long Track (LT) [NDDC11000 -], 1150M Long Track (LT) [NEDC11000 -], 1150M Long Track (LT) [NFDC11000 -], 1150M Wide Track (WT) / Low Ground Pressure (LGP) [NCDC11500 -], 1150M Wide Track (WT) / Low Ground Pressure (LGP) [NDDC11000 -], 1150M Wide Track (WT) / Low Ground Pressure (LGP) [NEDC11000 -], 1150M Wide Track (WT) / Low Ground Pressure (LGP) [NFDC11000 -], 1150M Wide Track (WT) / Low Ground Pressure (LGP) - Tier 4A (interim) and Stage IIIB [NFC105000 -]

PREVIEW - YOUFIXTHIS.COM

Download full manual at youfixthis.com

Electrical systems - 55

FAULT CODES - DTC

1150M Long Track (LT) - Tier 4A (interim) and Stage IIIB [NFC105000 -], 1150M Long Track (LT) [NCDC11500 -], 1150M Long Track (LT) [NDDC11000 -], 1150M Long Track (LT) [NEDC11000 -], 1150M Long Track (LT) [NFDC11000 -], 1150M Wide Track (WT) / Low Ground Pressure (LGP) [NCDC11500 -], 1150M Wide Track (WT) / Low Ground Pressure (LGP) [NDDC11000 -], 1150M Wide Track (WT) / Low Ground Pressure (LGP) [NEDC11000 -], 1150M Wide Track (WT) / Low Ground Pressure (LGP) [NFDC11000 -], 1150M Wide Track (WT) / Low Ground Pressure (LGP) - Tier 4A (interim) and Stage IIIB [NFC105000 -]

PREVIEW - YOUFIXTHIS.COM

Download full manual at youfixthis.com

3006 - Coolant Temperature Sensor - Signal Not Plausible

Context:
The Engine Control Unit (ECU) generated an error from a fault associated with the coolant temp sensor. This error could result from a signal out of range or a signal that is either erratic or intermittent. When the ECU determines that the coolant temp sensor temperature value is not valid, it will substitute another value to be used. In case of a defective coolant temp sensor during engine warm-up, a default coolant temperature value is derived from the ramp of the currently logged sensor data. If an error would occur during normal engine operation, the oil temperature is used as the default value. If the oil temp sensor is defective, **85 °C** (**185 °F**) is substituted as the default value.

Cause:
The coolant temp sensor signal to the ECU is either erratic or intermittent.

Possible failure modes:

1. Faulty electrical wiring or intermittent connection between coolant temp sensor and ECU.
2. Faulty coolant temp sensor.
3. Faulty ECU, supply voltages or grounds.

Solution:

1. Check electrical connections. Place the ignition switch OFF. Disconnect the coolant temp sensor connector and inspect housing body/latch, pins and wiring harness for damage. Also, inspect connector portion of the coolant temp sensor.

   A. If damage is determined after careful inspection, repair wiring and/or replace connector parts to ensure a good and sound electrical connection.

   B. If no damage is determined, proceed to step **2**.
2. Check for open circuit supply voltage in coolant temp sensor circuit. Use the test lead labeled "Coolant/Fuel Temp Sensor" from the Tier II (NEF) Diagnostic Repair Kit to access the pins on the connector. Place the ignition switch OFF. Disconnect the coolant temperature connector from coolant temp sensor and measure the voltage between Pin 1 and Pin 2. There should be approximately **5 volts**.

   A. If **5 volts** is present, proceed to step **4**.

   B. If **5 volts** is not present, proceed to step **3**.
3. Check for faulty wiring. Place the ignition switch OFF. Remove and perform continuity tests between connectors WTF and 2 on engine sensor harness. Flex harness during test to check for any intermittent operation. Use the test lead labeled "Coolant/Fuel Temp Sensor" from the Tier II (NEF) Diagnostic Repair Kit to be able to access the pins on the sensor connector WTF. Also, use the **0.4 mm** (**0.017 in**) diameter test probes from the repair kit when connecting the digital multi-meter (DMM) to the 2 connector. Make sure the DMM's test lead resistance is taken into account when making continuity measurements. See test table below.

   Important Note:
   Check and verify that the Vehicle Status is correct. Potential ECU damage could result when removing main ECU connectors if this is not followed.

Test Type	From	To	Expected Results
1. Continuity	WTF (Pin: 1)	2 (Pin: 15)	Approx. **0 – 0.10 ohms**
2. Continuity	WTF (Pin: 2)	2 (Pin: 26)	Approx. **0 – 0.10 ohms**
3. Short Circuit	2 (Pin: 15)	2 (Pin: 32)	Open Circuit
4. Short Circuit	2 (Pin: 15)	2 (Pin: 33)	Open Circuit
5. Short Circuit	2 (Pin: 15)	2 (Pin: 26)	Open Circuit

   A. If continuity/shorts test is successful, go to step **4**.

   B. If continuity/shorts test is unsuccessful, find and repair the damaged section(s) of the wiring harness.

PREVIEW - YOUFIXTHIS.COM
Download full manual at youfixthis.com

Schematic legend			
(1)	UCM connector X-018 Pin 6 Right Motor Solenoid Signal Fault Codes 4141, 4142, 4143, 4144, and 4322	**(4)**	Connector X-001/ X-090
(2)	UCM connector X-016 Pin 21 Right/ Left Motor Solenoid Return Fault Codes 4321, 4323, and 4322	**(5)**	Right Motor Solenoid Connector X-131
(3)	UCM connector X-018 Pin 19 Left Motor Solenoid Signal Fault Codes 4151, 4152, 4153, 4154, and 4322	**(6)**	Left Motor Solenoid Connector X-132

A. The connectors are secure and the harness is free of damage. Go to step **3**.

B. The connectors or the harness has damage. Repair or replace the harness or connectors as required. Return to step **1** to confirm elimination of fault.

3. Measure the voltage on the signal wire.

   Turn the ignition switch OFF.

   Disconnect UCM connector X-018.

   Disconnect the left motor solenoid.

   Turn the ignition switch ON.

   Measure the voltage between X-018 pin 19 and chassis ground. The chassis ground connection must be clean and free of paint, oil, and dirt. The voltage should be less than **0.5 V**.

   A. The voltage is less than **0.5 V**. Go to step **4**.

   B. The voltage is greater than **0.5 V**. There is a short circuit to another voltage source. Repair or replace the harness as required. Return to step **1** to confirm elimination of fault.

4. Test the circuit.

   Turn the ignition switch OFF.

   Reconnect the UCM connector.

   Disconnect the Left Motor Solenoid.

   Fabricate a jumper wire that will connect between X-132 pin 1 and X-132 pin 2.

   Connect the jumper wire between X-132 pin 1 and X-132 pin 2.

   Turn the ignition switch ON.

   Access the fault code screen on the EST.

   Fault code 4153 should no longer be active. Fault code 4152 is now active.

   A. Fault code 4153 is no longer active. Fault code 4152 is now active. Temporarily replace the solenoid and retest. Return to step **1** to confirm elimination of the fault.

   B. Fault code 4153 is still present and active. Fault code 4152 did not become active. Temporarily replace the UCM and retest. Return to step **1** to confirm elimination of the fault.

Harnesses and connectors - Electrical schematic sheet 09 UCM (55.100-C.20.E.09)
Harnesses and connectors - Electrical schematic sheet 23 Drive Train/ Pumps (55.100-C.20.E.23)

Download full manual at youfixthis.com
PREVIEW - YOUFIXTHIS.COM

19046 - Reagent - pressure sensor - Open circuit

Context:
The Dosing Control Unit (DCU) has detected a DEF/AdBlue® pressure sensor failure. This pressure sensor is located inside the DCU.

Cause:
This fault occurs when the sensor signal level is below **0.1 V** for over **700 ms**. This fault is corrected if sensor returns to normal output for greater than **1.0 s**.

Possible failure modes:

1. A faulty DEF/AdBlue® supply line.
2. Faulty DCU wiring.
3. A faulty DCU.

Solution:

1. Verify the fault is still present and in an active state.
   A. If the fault is still present and active, continue with step **2**.
   B. If the fault is not present, the fault may be intermittent. Check for an intermittent the fault. If no the faults are found, clear the fault code. Return machine to service.
2. Visually inspect the DEF/AdBlue® lines.
   A. If there is no damage, continue with step**3**.
   B. Repair/replace damaged lines.
3. Visually inspect for a damaged DCU wiring, harness, pins or connectors.
   A. If there is no damage, continue with step**4**.
   B. Repair/replace damaged wiring.
4. Verify the proper software level is installed in the DCU.
   A. The incorrect software level is installed. Install the correct software level. Test the system for proper operation.
   B. The correct software level is installed, replace the DCU. Install the current software level. Test the system to verify repairs.

   NOTE: *If the unit is equipped with 2010 or 2011 software, you can update the software to 2012. If you update the Engine Control Unit (ECU) software, the Display software also needs to be updated. This will change how the operator observes and detects the faults with the after treatment system. Be advised, if you update software to a newer level you cannot reverse back to the older software.*

Harnesses and connectors - Electrical schematic sheet 05 Exhaust Control (55.100-C.20.E.05)

PREVIEW - YOUFIXTHIS.COM

Download full manual at youfixthis.com

Dozer blade and arm - 86

Dozer blade - 110

1150M Long Track (LT) - Tier 4A (interim) and Stage IIIB [NFC105000 -], 1150M Long Track (LT) [NCDC11500 -], 1150M Long Track (LT) [NDDC11000 -], 1150M Long Track (LT) [NEDC11000 -], 1150M Long Track (LT) [NFDC11000 -], 1150M Wide Track (WT) / Low Ground Pressure (LGP) [NCDC11500 -], 1150M Wide Track (WT) / Low Ground Pressure (LGP) [NDDC11000 -], 1150M Wide Track (WT) / Low Ground Pressure (LGP) [NEDC11000 -], 1150M Wide Track (WT) / Low Ground Pressure (LGP) [NFDC11000 -], 1150M Wide Track (WT) / Low Ground Pressure (LGP) - Tier 4A (interim) and Stage IIIB [NFC105000 -]

PREVIEW - YOUFIXTHIS.COM

Download full manual at youfixthis.com

Platform, cab, bodywork, and decals - 90

Cab - 150

1150M Long Track (LT) - Tier 4A (interim) and Stage IIIB [NFC105000 -], 1150M Long Track (LT) [NCDC11500 -], 1150M Long Track (LT) [NDDC11000 -], 1150M Long Track (LT) [NEDC11000 -], 1150M Long Track (LT) [NFDC11000 -], 1150M Wide Track (WT) / Low Ground Pressure (LGP) [NCDC11500 -], 1150M Wide Track (WT) / Low Ground Pressure (LGP) [NDDC11000 -], 1150M Wide Track (WT) / Low Ground Pressure (LGP) [NEDC11000 -], 1150M Wide Track (WT) / Low Ground Pressure (LGP) [NFDC11000 -], 1150M Wide Track (WT) / Low Ground Pressure (LGP) - Tier 4A (interim) and Stage IIIB [NFC105000 -]

PREVIEW - YOUFIXTHIS.COM

Download full manual at youfixthis.com

SPECIAL TOOL INDEX

Genuine	Reference	PAGE
CAS1804 [Pressure Test Fitting Kit]	Pump Left-hand pump - Pressure test	29.1 / 19
CAS1804 [Pressure Test Fitting Kit]	Pump Right-hand pump - Pressure test	29.1 / 23
CAS1804 [Pressure Test Fitting Kit]	Hydrostatic system feed pump - Pressure test	29.1 / 27
CAS1804 [Pressure Test Fitting Kit]	Hydrostatic circuit supply pump - Pressure test - Right and Left	29.1 / 38
CAS1804 [Pressure Test Fitting Kit]	Hydraulic systems - Pressure test - Load sense relief valve	35.1 / 40
CAS1804 [Pressure Test Fitting Kit]	Hydraulic systems - Pressure test - Overset relief valve	35.1 / 42
380040176 [Measuring Tool Kit]	Track frame and driving wheels - Special tools	48.1 / 3
380500001 [Track Alignment Plate]	Track frame - Special tools	48.1 / 4
380500002 [Track Frame Alignment Plate]	Track frame - Special tools	48.1 / 4
380500001 [Track Alignment Plate]	Track frame - Install	48.1 / 24
380500002 [Track Frame Alignment Plate]	Track frame - Install	48.1 / 25
380500001 [Track Alignment Plate]	Track frame - Install	48.1 / 27
CAS10762-1 [Lubricating Nozzle]	Track chain - Special tools	48.2 / 3
CAS1755 [Seal Installation Tool]	Idler wheel - Special tools	48.3 / 4
CAS1755 [Seal Installation Tool]	Idler wheel - Assemble	48.3 / 21
CAS1755 [Seal Installation Tool]	Idler wheel - Assemble	48.3 / 22
CAS1755 [Seal Installation Tool]	Idler wheel - Assemble	48.3 / 22
CAS1316 [Tool]	Track rollers - Special tools	48.4 / 3
CAS1283 [Seal Installation Tool]	Track rollers - Special tools	48.4 / 3
CAS1950A-1 [Calipers, Outside-Lock Joint]	Track roller - Visual inspection	48.4 / 18
380002800 [Expansion Plug Installation Tool]	Dropbox and final drive - Special tools	48.5 / 3
380002800 [Expansion Plug Installation Tool]	Planetary final drive unit - Replace - Expansion plug	48.5 / 76
380001325 [Compressor Belt Tension Checking Tool]	Air conditioning - Special tools	50.3 / 4
380000315 [Recovery And Rrecharge Portable System (For Discharging And Recovering Of The Refrigerant)]	Air conditioning - Special tools	50.3 / 4
380001327 [Electronic Leak Detector]	Air conditioning - Special tools	50.3 / 5
380050012 [Sanko/Sanden Compressor Service Tool Kit]	Air-conditioning compressor - Special tools	50.3 / 9
380001327 [Electronic Leak Detector]	Air conditioning - Leakage test	50.3 / 28

Download full manual at youfixthis.com

PREVIEW - YOUFIXTHIS.COM

SYMBOLS

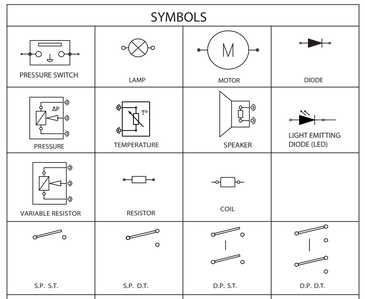

CIRCUIT DIAGRAM LEGENDS

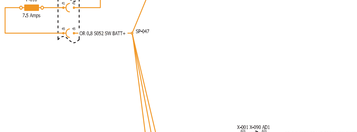

COLOR	ABBREVIATION
BLACK	BK
BLUE	BL
LIGHT BLUE	LB
BLACK/WHITE	BK/WH
GREEN	GN
LIGHT GREEN	LG
ORANGE	OR
PINK	PK
VIOLET	VT
RED	RD
GREY	GY
TAN	TN
WHITE	WH
YELLOW	YE

WIRE SIZE CHART

Sq. mm	AWG
0.5	20
0.8	18
1.0	16
2.0	14
3.0	12
5.0	10
8.0	8

SUB SYSTEM DESCRIPTION

POWER DIST/ CHARGING SYSTEM	1
STARTING SYSTEM	2
GROUNDING	3
ENGINE CONTROL	4
EXHAUST CONTROL	5
PARK BRAKE	6
WINCH CONTROL	7
24-12 CONVERTER/ POWER POINT	16
FAN CONTROL	17
LEVELING CONTROL	18
IMPLEMENT ENABLE	19
HVAC	20
RADIO	21
DRIVE TRAIN	22
DRIVE TRAIN/ PUMPS	23
BLADE CONTROL	24
BLADE CONTROL/ RIPPER CONTROL	25
VEHICLE SAFETY/ AIR SEAT/ ROPS HEAT	26
TELEMATICS	27
CAN BUS SYSTEM	28
HORN/ BACK UP ALARM	29
HAND THROTTLE	30
2050 PUMPS JUMPER	31

STANDARD SYMBOL/ LEGEND

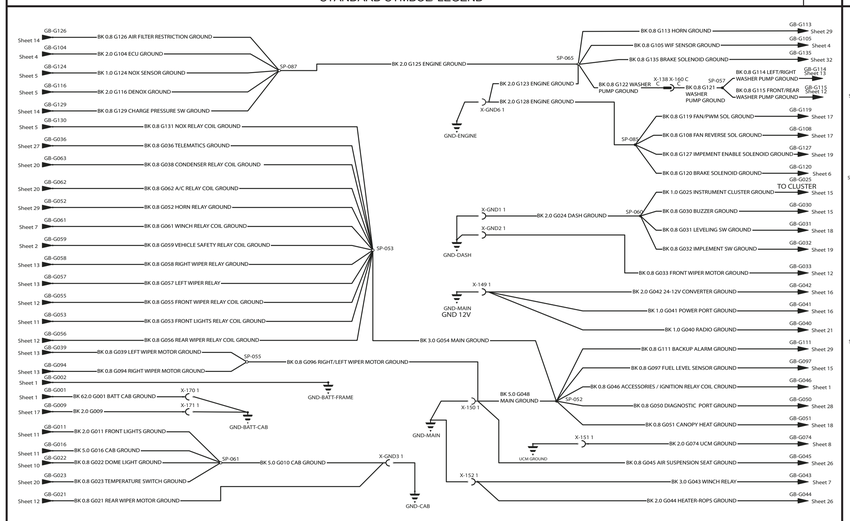

POWER DISTRIBUTION/ CHARGING SYSTEM | 1

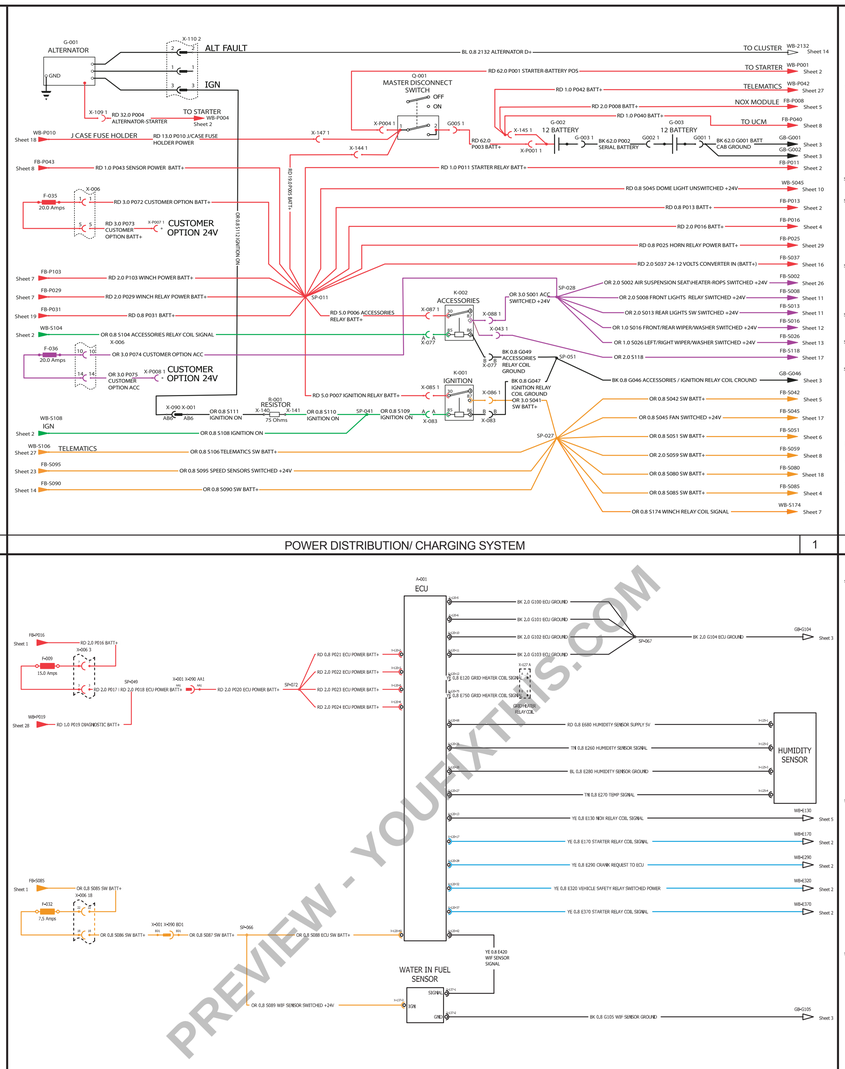

STARTING SYSTEM | 2

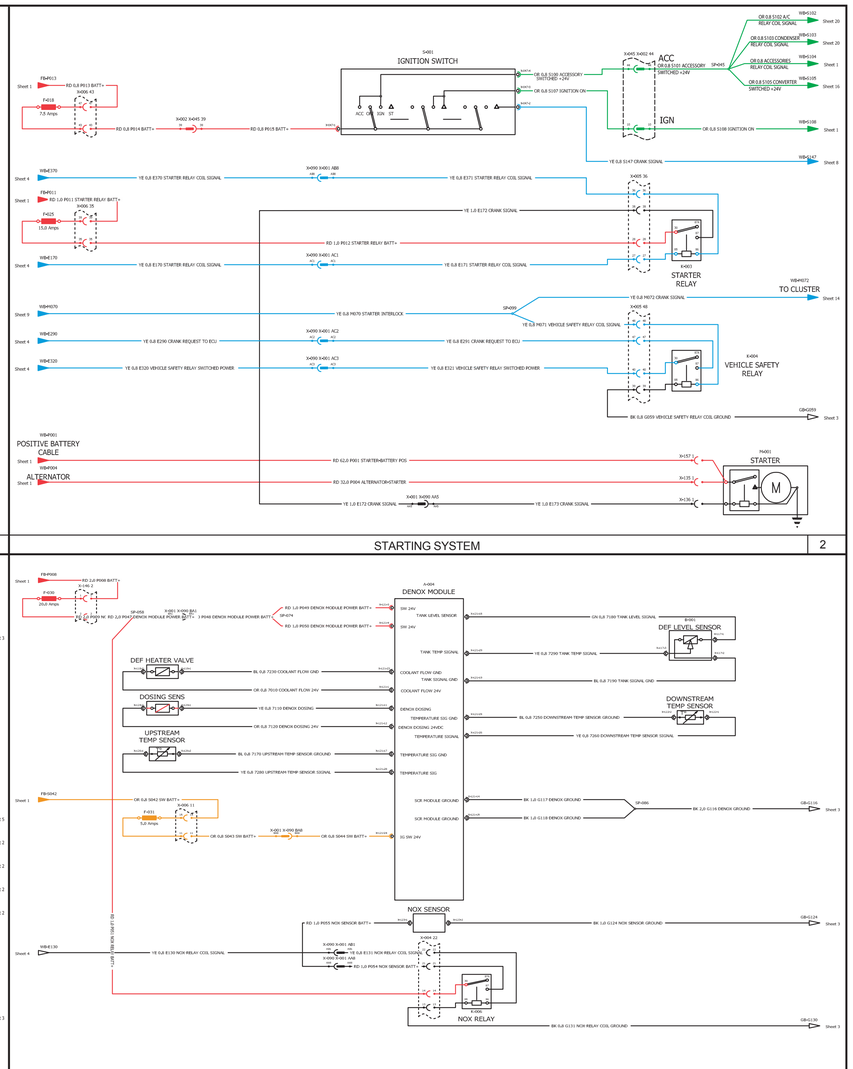

GROUNDING | 3

ENGINE CONTROL | 4

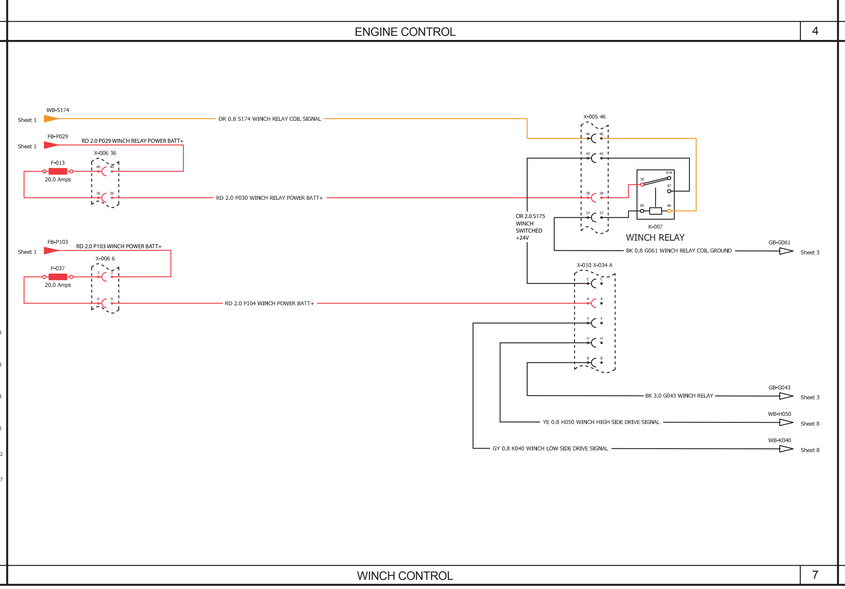

EXHAUST CONTROL | 5

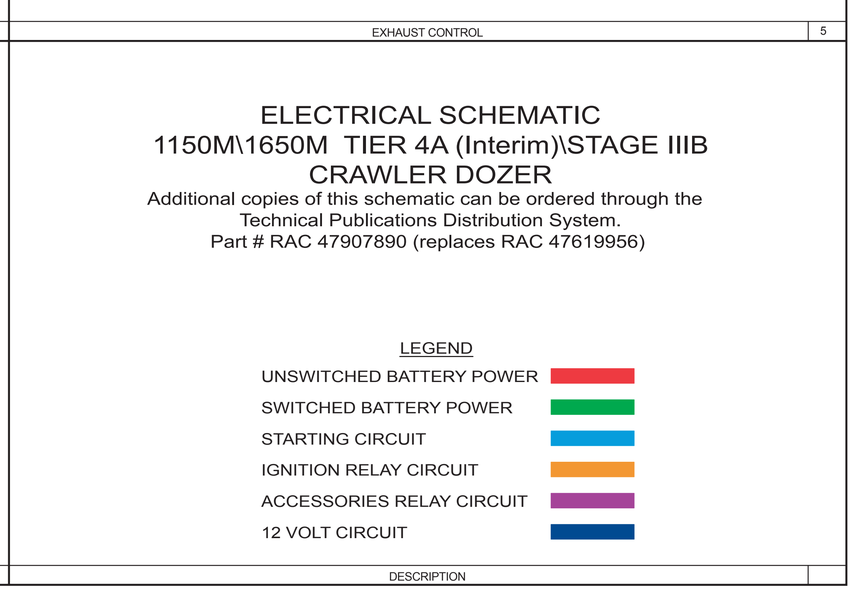

PARK BRAKE | 6

WINCH CONTROL | 7

ELECTRICAL SCHEMATIC
1150M\1650M TIER 4A (Interim)\STAGE IIIB CRAWLER DOZER

Additional copies of this schematic can be ordered through the Technical Publications Distribution System.
Part # RAC 47907890 (replaces RAC 47619956)

DESCRIPTION

LEGEND

- UNSWITCHED BATTERY POWER
- SWITCHED BATTERY POWER
- STARTING CIRCUIT
- IGNITION RELAY CIRCUIT
- ACCESSORIES RELAY CIRCUIT
- 12 VOLT CIRCUIT

PREVIEW - YOUFIXTHIS.COM

Download full manual at youfixthis.com

Contents

INTRODUCTION

Engine 10

[10.001] Engine and crankcase 10.1

[10.202] Air cleaners and lines 10.2

[10.206] Fuel filters 10.3

[10.216] Fuel tanks 10.4

[10.304] Engine lubrication system 10.5

[10.310] Aftercooler 10.6

[10.400] Engine cooling system 10.7

[10.414] Fan and drive 10.8

[10.500] Selective Catalytic Reduction (SCR) exhaust treatment 10.9

Hydrostatic drive 29

[29.218] Pump and motor components 29.1

Brakes and controls 33

[33.110] Parking brake or parking lock 33.1

[33.202] Hydraulic service brakes 33.2

Hydraulic systems 35

[35.000] Hydraulic systems 35.1

[35.300] Reservoir, cooler, and filters 35.2

[35.104] Fixed displacement pump 35.3

[35.105] Charge pump 35.4

[35.359] Main control valve 35.5

[35.741] Dozer blade cylinders 35.6

Tracks and track suspension 48

[48.130] Track frame and driving wheels 48.1

[48.100] Tracks 48.2

Download full manual at youfixthis.com

PREVIEW - YOUFIXTHIS.COM

20. Measure distance from the straight edge to the end of the roller shaft that is located below the equalizer beam **(A)**.

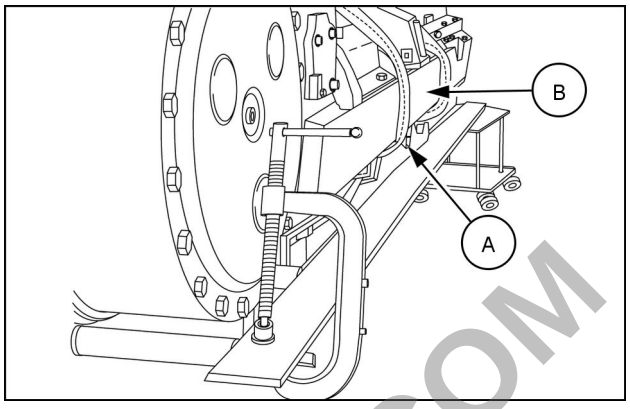

RAIL15DOZ0231AA 15

21. Measure distance from the straight edge to the end of the roller shaft that is located in front of the equalizer beam **(B)**.
22. Move the front of the rack frame in or out until the rollers are parallel within **1.5 mm** (**0.1 in**)
23. Torque the cap screws on the equalizer beam mounting bracket **(5)** to **515.0 – 618.0 N·m** (**379.8 – 455.8 lb ft**) to the track frame **(9)**.

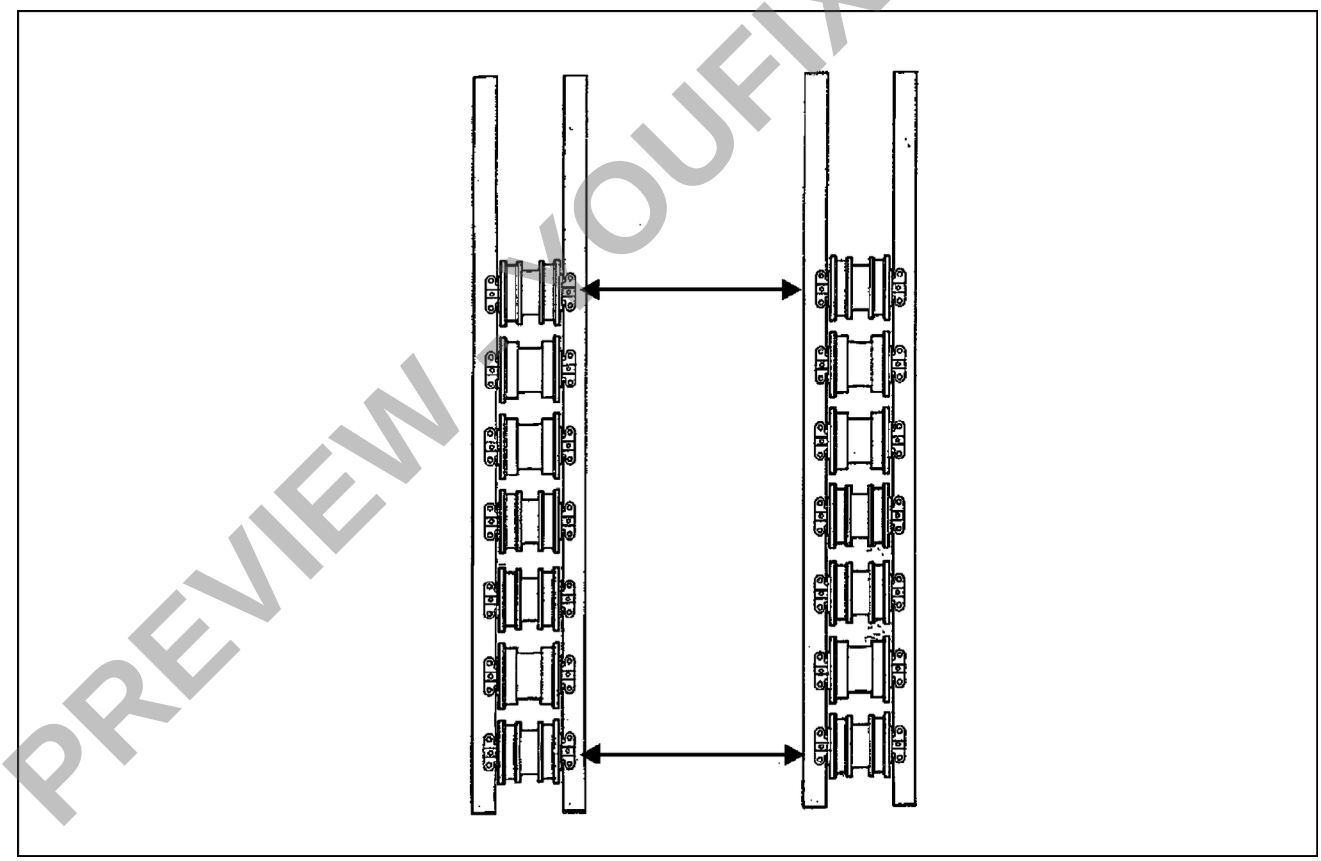

RAIL15DOZ0398FA 16

Horizontal measurement

24.

NOTE: *The views are from the top looking down. Track frame **(9)** alignment can be checked after the unit is assembled. Measure track rollers parallel and diagonal alignment as shown.*

NOTE: *Alignment should be within **3.0 mm** (**0.1 in**).*

Download full manual at youfixthis.com
PREVIEW YOUFIXTHIS.COM

WINCH CONTROL

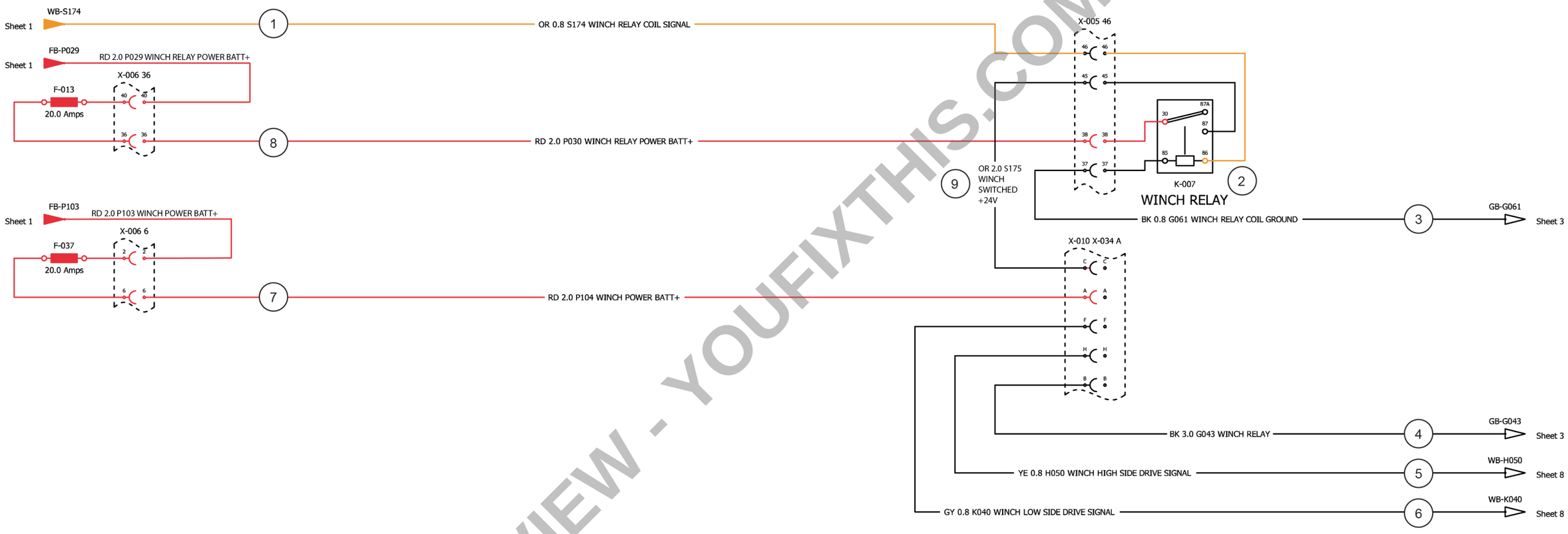

SHEET 7

RAIL13DOZ0964JA 1

PREVIEW - YOUFIXTHIS.COM

Download full manual at youfixthis.com

1616 - Invalid Configuration Between AIC and UCM

NOTE: *When the cause of the error code has been rectified, clear the error code and test the system for normal operation.*

Cause:
The instrument cluster has not detected the UCM during a network configuration at ignition switch ON.

Possible failure modes:

1. Instrument cluster not configured correctly.
2. Network configuration error.
3. Faulty instrument cluster.

Solution:

1. Check if the instrument cluster has been configured.

   A. Clear the instrument cluster network configuration using EST and turn the ignition switch ON to re-configure the instrument cluster. Refer to electronic system section in service manual.

   B. If the error is still present, check for other instrument cluster communication related error codes and continue to these tests. If no other error codes are present and the fault reoccurs, remove and replace the instrument cluster.

PREVIEW - YOUFIXTHIS.COM

Download full manual at youfixthis.com

Schematic legend			
(1)	Transmission joystick connector X-033	**(3)**	UCM connector X-017 Pin 15, Leveling down/grading signal
(2)	UCM connector X-017 Pin 20, Leveling up/AIC command signal	**(4)**	UCM connector X-017 Pin 23, Auto/manual/blade shake signal

A. The connectors are secure and the harness is free of damage. Go to step **3**.

B. The connectors or the harness has damage. Repair or replace the harness or connectors as required. Return to step **1** to confirm elimination of fault.

3. Measure the voltage on the signal wire.

   Turn the ignition switch OFF.

   Disconnect UCM connector X-017.

   Turn the ignition switch ON.

   Measure the voltage between X-017 pin 23 and chassis ground. The chassis ground connection must be clean and free of paint, oil, and dirt. The voltage should be less than **6 V**. Wiggle the harness during measurement to reveal an intermittent condition.

   A. The voltage is less than **6 V**. Temporarily replace the UCM and retest. Return to step **1** to confirm elimination of the fault.

   B. The voltage is greater than **6 V**. Go to step **4**.

4. Measure the voltage on the signal wire.

   Turn the ignition switch OFF.

   Disconnect UCM connector X-017.

   Disconnect joystick connector X-033.

   Turn the ignition switch ON.

   Measure the voltage between X-017 pin 23 and chassis ground. The chassis ground connection must be clean and free of paint, oil , and dirt. The voltage should be less than **0.5 V**. Wiggle the harness during measurement to reveal an intermittent condition.

   A. The voltage is less than **0.5 V**. Temporarily replace the transmission joystick and retest. Return to step **1** to confirm elimination of the fault.

   B. The voltage is greater than **0.5 V**. There is a short circuit to another voltage source. Repair or replace the harness as required. Return to step **1** to confirm elimination of the fault.

Harnesses and connectors - Electrical schematic sheet 24 Blade Control (55.100-C.20.E.24)
Harnesses and connectors - Electrical schematic sheet 09 UCM (55.100-C.20.E.09)

PREVIEW - YOUFIXTHIS.COM

Download full manual at youfixthis.com

PREVIEW ONLY

You're viewing 25 of 2282 pages

The full manual includes:

- All 2282 pages, complete
- Searchable PDF (find any keyword)
- No watermarks
- Instant download
- Print-ready quality

GET FULL MANUAL NOW

Case 1150M Service Manual

Scan or click anywhere
youfixthis.com

Click anywhere on this page to get the full manual