# 1255 & 1455

# Workshop Manual



PREVIEW ONLY YOUFIXTHIS.COM

YouFixThis.com

Download full manual at youfixthis.com

## Table of Contents

*This Manual covers the following major sections:*


| | | Page |
|---|---|---|
| 1. | INTRODUCTION | 4 |
| 2. | SERVICE DIAGNOSIS | 6 |
| 3. | SPECIFICATIONS | 12 |
| 4. | LONGITUDINAL AND CROSS SECTION | 16 |
| 5. | VALVE LEVER ASSY | 18 |
| 6. | CAMSHAFT AND IDLER GEAR | 21 |
| 7. | CYLINDER HEAD VALVES AND VALVE GUIDES | 27 |
| 8. | MANIFOLDS | 39 |
| 9. | FAN – V-BELTS | 40 |
| 10. | CRANKSHAFT PULLEY AND VIBRATION DAMPER | 41 |
| 11. | CRANKCASE FRONT COVER AND PLATE | 43 |
| 12. | CRANKCASE | 45 |
| 13. | CRANKSHAFT | 49 |
| 14. | PISTONS CYLINDER SLEEVES – CONNECTING RODS | 63 |
| 15. | BALANCER (4-cyl. only) | 72 |
| 16. | FLYWHEEL | 77 |
| 17. | LUBRICATING SYSTEM | 80 |
| 18. | OIL PUMP | 81 |
| 19. | WATER PUMP | 86 |
| 20. | THERMOSTAT AND COOLANT MANIFOLD | 89 |
| 21. | INJECTION PUMP EP/VA–VE | 91 |
| 22. | INJECTION NOZZLE HOLDER | 96 |
| 23. | TIMING GEAR TRAIN | 97 |
| 24. | VALVE LASH ADJUSTMENT | 99 |
| 25. | ENGINE TESTING | 101 |


PREVIEW - YOUFIXTHIS.COM



Download full manual at youfixthis.com

## Work Safely — Follow these Rules

This symbol is used to call your attention to instructions concerning your personal safety. Be sure to observe and follow these instructions.

1. Always wear safety glasses when using a hammer, chisel or other tools that may cause chips to fly.
2. Keep work area organized and clean. Wipe up oil or spills of any kind. Keep tools and parts off of the floor. Eliminate the possibility of a fall which could result in a serious injury.
3. Be sure to reinstall safety devices, guards or shields after adjusting and/or servicing the machine.
4. After servicing, be sure all tools, parts, or servicing equipment are removed from the machine.
5. Use a safety catch on all hoist hooks. Do not take a chance, the load could slip off of the hook.
6. Electrical storage batteries give off highly inflammable hydrogen gas when charging and continue to do so for some time after receiving a steady charge. Do not under any circumstances allow an electric spark or an open flame near the battery. Always disconnect a battery cable before working on the electrical system.
7. Use pullers to remove bearings, bushings, gears, cylinder sleeves, etc. when applicable. Use hammers, punches and chisels only when absolutely necessary. Then, be sure to wear safety glasses.
8. Be careful when using compressed air to dry parts. Use approved air blow guns, do not exceed 30 psi, wear safety glasses or cloggles and use proper shielding to protect everyone in the work area.
9. Do not wear rings, wrist watches or loose fitting clothing when working on machinery, they could catch on moving parts causing serious injury. Wear sturdy, rough-soled work shoes. Never adjust and/or service a machine in bare feet, sandals or sneakers.
10. Exhaust gases are highly poisonous! Therefore, do not start the engine in closed rooms unless adequate ventilation is ensured, or an exhaust decontamination device is being used.

## Lubrication

Instructions on the lubrication of each assembly are given in the Lubrication Guide in the Operator's Manual. When assembling any parts, always coat all wearing surfaces with the lubricant specified in the guide. Use sufficient quantities of lubricant to prevent any danger of seizing, scoring or excessive wear when the assembly is first operated. Failure to provide "starting lubrication" may result in serious damage. (Refer to "Priming Lubricating System" in this Section.)

## Gaskets and Seals

Always use new gaskets and seals. Be extremely careful not to damage the seals in any way during installation.

## Service Tools

International diesel engines are designed so that few service tools are required other than those in the mechanic's tool kit. Wherever the application of inexpensive special service equipment will facilitate work, it is shown. Otherwise, it is assumed that servicemen will select from their tool kits such tools as are required. Information regarding special tool equipment is given in the "Parts Catalog".

## Service Parts

Always use genuine I. H. service parts. The best material obtainable, and experience gathered through many years of power equipment manufacturing, enable International Harvester to produce quality that will not be found in imitation or "just as good" repair parts. No serviceman can afford to guarantee a repair job that is not serviced with genuine I. H. parts. No owner should be satisfied with other than genuine I. H. parts.

For the correct service parts to be used on a machine, always refer to the parts catalog for the particular machine. The loose-leaf parts catalogs are accurate and are continually being brought up to date by the issuance of new pages covering any changes in part numbers.

## Serial Numbers

Depending on engien application the engine serial number is stamped on a pad on the right side of the engine either near the center below the tappet side cover or towards the rear above the side cover.

## Priming Lubricating System

*Note:* Diesel engines must not be rotated when priming with oil; otherwise, they are likely to start running.

When assembling the overhauled engine, it is necessary to thoroughly lubricate the various running parts with clean engine oil to assure initial lubrication when engine is first started. However, to further make certain that complete initial lubrication is available, the engine lubricating system should be pressure primed or charged with oil. Attach the line from a priming device to a suitable fitting located in the main oil gallery, filter header or oil cooler of the engine and inject sufficient oil into the engine to fill the oil filters and charge the entire system. Use only clean engine oil in accordance with Operator's Manual. New or overhauled engines that have been in storage over an extended period should also be primed in a similar manner.

PREVIEW - YOUFIXTHIS.COM

YouFixThis.com



Download full manual at youfixthis.com

| Probable Cause | Remedy |
|---|---|
| **Engine Fails to Turn** | |
| 1. Batteries too low to turn engine | Charge batteries or install new ones. |
| 2. Starting switch inoperative | Inspect for faulty cables and terminals. Replace starting switch if necessary. |
| 3. Cranking motor inoperative | Refer to Service Manual "Electrical Equipment". |
| 4. Engine oil too heavy | Use correct grade of lubricating oil. |
| 5. Internal seizure | Hand crank the engine. If the engine does not turn easily, seizure due to internal damage; including gear train, pistons, sleeves, connecting rods or main bearings, is indicated. |
| 6. Hydrostatic lock | Remove all the injection nozzles and crank the engine. Check for fuel or coolant in the cylinder. |
| **Engine Does Not Develop Full Power** | |
| 1. Low or no fuel pressure | |
| a. Insufficient fuel | Check fuel tank. |
| b. Fuel oil filter clogged | Disassemble and clean each unit. |
| c. Fuel filter gaskets defective (air being drawn into fuel) | Replace gaskets. |
| d. Moisture in fuel tank | Drain entire system including water trap and filter. Refill with clean fuel, and vent the air from the system. |
| 2. Poor fuel | Use good grade of fuel. |
| 3. Air cleaner clogged | Remove and service air cleaner as described in operator's manual. |
| 4. Injection pump not properly timed to the engine | Check timing. (Refer to Section "INJECTION PUMP.") |
| 5. Injection pump not operating properly | Remove injection pump and test it. Refer to Service Manual "Fuel System and Turbocharger" for test specifications. |
| 6. One or more fuel injection nozzles not operating properly | Replace the injection nozzles. |
| 7. Loose or broken fuel lines or fittings between injection pump and injection nozzles | Tighten or repair. |
| 8. Loose or broken connections or leaking gaskets at intake manifold or exhaust manifold | Tighten or repair. |
| 9. Improper valve settings | Reset as necessary. If out of adjustment an excessive amount, check for bent push rods. |
| 10. If equipped with ether priming system with butterfly valve, check the valve position | Correct. |
| 11. *Lack of compression* | Refer to "Poor Compression". |

PREVIEW - YOUFIXTHIS.COM

YouFixThis.com



Download full manual at youfixthis.com

### High Fuel Pressure

| | |
|---|---|
| 1. Clogged fuel return line or elbow . . . . . | Remove and clean. |

### Engine Runs Unevenly and Vibrates

| | |
|---|---|
| 1. Valve and spring assembly inoperative . . . . . | Repair or install parts needed. |

## SPECIFICATIONS

| *Engine* | *Number of Cylinders* | *Bore mm (inch)* | *Stroke mm (inch)* | *Piston Displacement $cm^3$ (cu. inch)* |
|---|---|---|---|---|
| D-155 | 3 | 98.4 (3.875) | 111.1 (4.375) | 2536 (155) |
| D-179 | | | 128.5 (5.06) | 2934 (179) |
| D-206 | | | 111.1 (4.375) | 3382 (206) |
| D-239 | | | 128.5 (5.06) | 3911 (239) |
| DT-239 | | | | |
| D-246 | 4 | 100.0 (3.937) | 128.5 (5.06) | 4034 (246) |
| D-268 | | | 139.7 (5.5) | 4389 (268) |
| D-310 | | | 111.1 (4.375) | 5073 (310) |
| D-358 | 6 | 98.4 (3.875) | 128.5 (5.06) | 5867 (358) |
| DT-358 | | | | |
| DT-402 | | 100.0 (3.937) | 139.7 (5.5) | 6587 (402) |

*Type* 4—Cycle—Diesel—Engines

Direction of rotation, facing flywheel L. H.

Compression ratio 16 : 1 (except D-268 and DT-402 15:1)

Compression at starting speed, MPa (PSI) 2.2—2.4 (313—341)

Firing order

| | |
|---|---|
| 3 Cyl. | 1—3—2 |
| 4 Cyl. | 1—3—4—2 |
| 6 Cyl. | 1—5—3—6—2—4 |

Valve clearance, engine hot, mm (inch) 0.30 (.012)

*Lubricating System*

Min. oil pressure at main oil gallery and 90 — 100 °C oil temperature

| | OLD | NEW |
|---|---|---|
| at rated speed MPa (PSI) | 0.25 (36) | 0.30 (44) |
| at low idle speed MPa (PSI) *) | | 0.09 (13) |

*) observe oil pressure warning light.

Oil consumption at rated speed and full load, less than 1.5 g/kWh (overhauled engine).

*Cooling System*

Most favourable operating temperature 90° — 95 °C (194° — 203 °F)

*Air System*

Max. permissible restriction before servicing the air cleaner 635 mm (25 inch) of water

PREVIEW - YOUFIXTHIS.COM



Download full manual at youfixthis.com

## Special Nut and Bolt Torque Data

| | | daNm | | | Lbf-ft | | |
|---|---|---|---|---|---|---|---|
| | | 1st step | 2nd step | final step | 1st step | 2nd step | final step |
| * | Balance weight necked-down bolts (obsolete) | 3 | – | 5.5 ÷ 6.0 | 21.7 | – | 40 ÷ 43.5 |
| * | Balance weight pitch diameter bolts | 6 | – | 10.0 ÷ 10.5 | 44 | – | 72.3 ÷ 76 |
| * | Main bearing cap necked down bolts (obsolete) 10.9 | 4 | 8 | 10.5 ÷ 11.5 | 29 | 58 | 76 ÷ 83 |
| * | Main bearing cap necked down bolts (obsolete) 12.9 | 4 | 8 | 13 ÷ 14 | 29 | 58 | 94 ÷ 101 |
| * | Main bearing cap pitch diameter bolts 12.9 | 4 | 8 | 19 ÷ 20 | 29 | 58 | 137.5 ÷ 145 |
| * | Main bearing cap pitch diameter bolts 10.9 | 4 | 8 | 14 ÷ 15 | 29 | 58 | 101 ÷ 109 |
| * | Connecting rod nuts "Angle" tightening procedure, refer to Illust. 144 | | | | | | |
| * | Annular spring tightener element or clamping ring | 3 | 6 | 6 ÷ 6.5 | 21.7 | 43.5 | 43.5 ÷ 47 |
| * | Capscrew-clamping ring front pto | 1.5 | 2.7 | 3.0 | 10.8 | 19.5 | 22 |
| ** | Idler gear necked down bolt (obsolete) | – | – | 9 ÷ 9.5 | – | – | 65 ÷ 69 |
| ** | Idler gear pitch diameter bolt | – | – | 10 ÷ 10.5 | – | – | 72 ÷ 76 |
| * | Flywheel bolts | 4 | 8 | 14 ÷ 15 | 30 | 60 | 103 ÷ 110 |
| | Bolts, seal ring retainer, rear | 1.5 | – | 1.8 ÷ 2 | 10.8 | – | 13 ÷ 14.5 |
| * | Cylinder-head nuts (obsolete) | 4 | 8 | 11.5 ÷ 12.5 | 29 | 58 | 83 ÷ 90 |
| * | Cylinder-head studs (obsolete) | – | – | 5 ÷ 6 | – | – | 36 ÷ 44 |
| * | Cylinder-head cap screws with round washer (obsolete) | 4 | 8 | 11 ÷ 12 | 29 | 58 | 80 ÷ 87 |
| * | Cylinder-head cap screws with collar | 4 | 8 | 14 ÷ 15 | 29 | 58 | 101 ÷ 109 |
| | Valve lever bracket studs | – | – | 3.5 ÷ 4 | – | – | 25 ÷ 29 |
| * | Valve lever bracket stud nuts | – | – | 6 ÷ 7 | – | – | 44 ÷ 51 |
| | Valve lever bracket clamping screw | – | – | 1 ÷ 1.2 | – | – | 7 ÷ 8.6 |
| | Side cover screws | – | – | 1.6 ÷ 1.8 | – | – | 12 ÷ 13 |
| | Oil pressure gauge | | | max. 1 | | | max. 7.2 |
| | Temperature sender unit | | | max. 2 | | | max. 14.5 |
| | Exhaust manifold stud nuts | – | – | 3.5 ÷ 4.0 | – | – | 26 ÷ 30 |
| | Nozzle holder stud ) | – | – | 1.3 ÷ 1.8 | – | – | 9.4 ÷ 13 |
| | Nozzle holder stud nuts ) flange mounted | 0.5 | – | 1 ÷ 1.2 | 3.6 | – | 7.2 ÷ 8.7 |
| | Nozzle union nut ) nozzle holder | – | – | 6 ÷ 8 | – | – | 44 ÷ 58 |
| * | Bolt ) crab mounted | – | – | 2.3 ÷ 2.7 | – | – | 16.6 ÷ 19.5 |
| | Nozzle union nut ) nozzle holder | – | – | 5 ÷ 7 | – | – | 36.2 ÷ 50.7 |
| | Nozzle holder leak oil connection hollow screw | – | – | 0.2 ÷ 0.8 | – | – | 1.5 ÷ 5.8 |
| | Injection line union nuts | – | – | 2 ÷ 2.5 | – | – | 15 ÷ 18 |
| | Valve cover adapter stud | – | – | 1.6 ÷ 1.8 | – | – | 11.6 ÷ 13 |
| | Valve cover stud nut | – | – | 0.5 ÷ 0.7 | – | – | 3.6 ÷ 5 |
| | Valve cover screws (sheet metal) | – | – | 0.5 ÷ 0.7 | – | – | 3.6 ÷ 5 |
| | Valve cover screws (gray iron) | – | – | 1.5 ÷ 1.7 | – | – | 11 ÷ 12.3 |
| | Oil pan drain plug (when asbesto-filled packing ring is used) | – | – | 5 ÷ 6 | – | – | 36 ÷ 43 |
| | Oil pan drain plug (when copper ring is used) | – | – | 13.8 ÷ 15 | – | – | 100 ÷ 118 |
| | Plug with socket head (oil gallery-crankcase) | – | – | max. 1.2 | – | – | max. 8.7 |
| | Injection pump gear bolt (3 radial lines) | 1.5 | – | 2.2 ÷ 2.5 | 11 | – | 16 ÷ 18 |
| | Injection pump gear bolt (6 radial lines) | 1.5 | – | 2.5 ÷ 2.8 | 11 | – | 19 ÷ 21 |
| | Injection pump cover bolt (tighten crosswise) | 0.4 | – | 0.8 ÷ 1 | 3 | – | 5.8 ÷ 7.2 |
| | Injection pump flange nut | 1.5 | – | 2.2 ÷ 2.5 | 11 | – | 16 ÷ 18 |
| | Injection pump plunger end plug (AF 17) | – | – | 4.5 ÷ 5.5 | – | – | 33 ÷ 40 |
| | Injection pump plunger end plug (AF 12) | – | – | 1.4 ÷ 2.0 | – | – | 10 ÷ 15 |
| | Injection pump drive shaft nut M 12 (AF 19) | – | – | 6 ÷ 7 | – | – | 44 ÷ 50 |
| | Injection pump drive shaft nut M 14 (AF 22) | – | – | 8.5 ÷ 10 | – | – | 63 ÷ 72 |
| | Hollow screws | – | – | 2 ÷ 2.5 | – | – | 15 ÷ 18 |
| | Bolts, sheet metal oil pan | – | – | 1.2 ÷ 1.4 | – | – | 8.7 ÷ 10 |
| | Engine breather screw | – | – | 0.8 ÷ 1.0 | – | – | 5.8 ÷ 7.2 |
| | Valve set screw clamping torque | – | – | 1.7 ÷ 4.5 | – | – | 12.3 ÷ 32.6 |
| | Exhaust manifold, coolant filter mounting stud | – | – | 3.5 ÷ 4.0 | – | – | 26 ÷ 29 |
| | VE Injection pump support angle mounting bolt M 6 | – | – | 0.7 ÷ 0.9 | – | – | 5.2 ÷ 6.6 |

* Oiled

** Use liquid locking compound while mounting

YouFixThis.com



Download full manual at youfixthis.com

PREVIEW - YOUFIXTHIS.COM

**Longitudinal Section of Engine**

1 – Oil pump
2 – Idler gear (Oil pump)
3 – Crankshaft oil seal, front
4 – Crankshaft
5 – Crankshaft pinion
6 – Idler gear
7 – Camshaft
8 – Camshaft gear
9 – Water pump
10 – Valve seat insert
11 – Exhaust valve
12 – Coolant jet for injection nozzle
13 – Valve lever shaft
14 – Exhaust valve lever
15 – Intake valve lever
16 – Intake valve
17 – Valve stem guide
18 – Turbocharger
19 – Injection nozzle holder
20 – Flywheel and crankshaft oil seal, torque converter version
21 – Main bearing, rear
22 – Main bearing
23 – Balance weight
24 – Balance weight bolts
25 – Fuel feed pump drive
26 – Oil suction screen
27 – Flywheel and crankshaft oil seal, early torque converter version
28 – Flywheel housing
29 – Flywheel and crankshaft oil seal, dry type disk clutch version

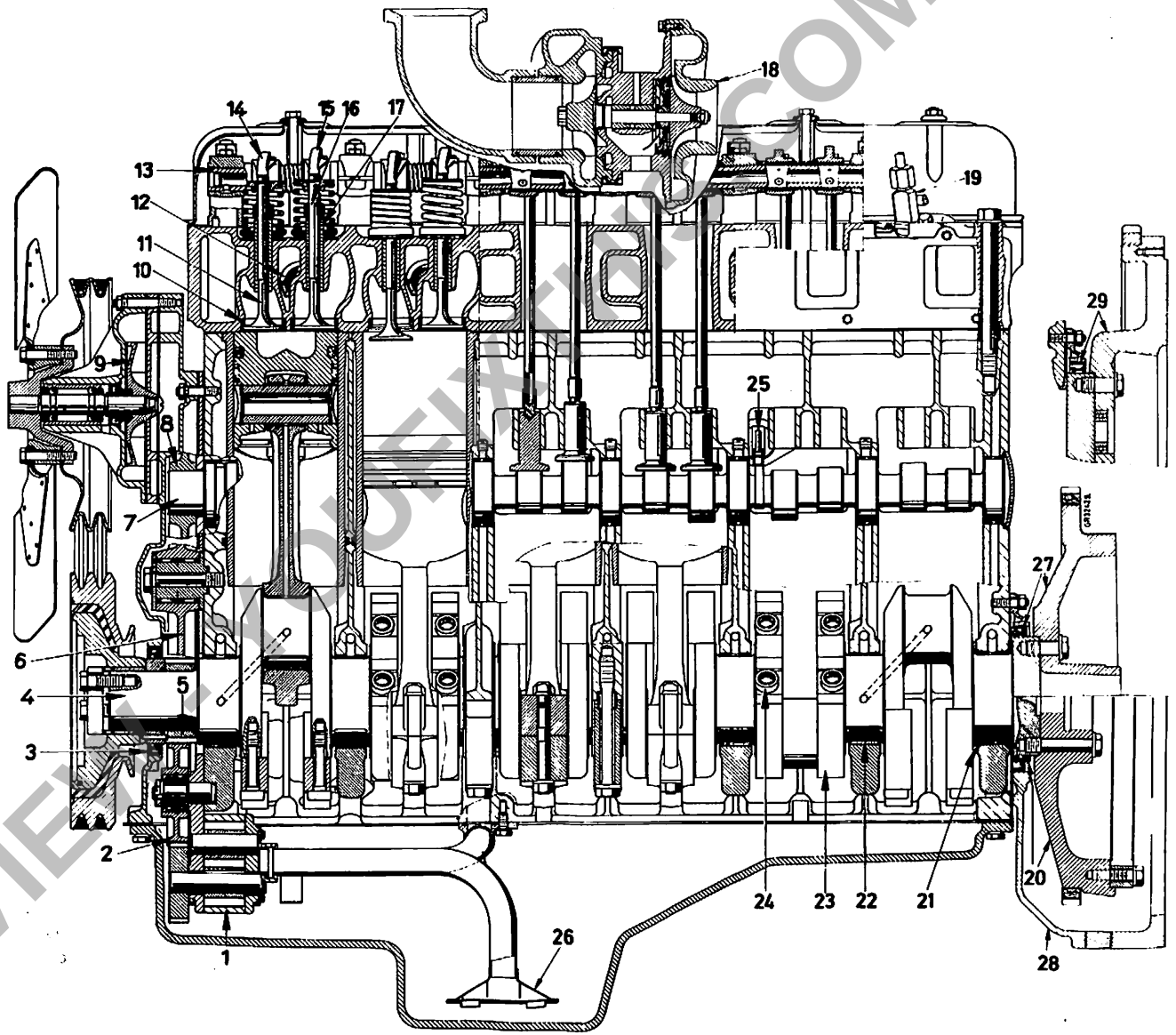


Illust. 3
Typical DT-358 engine



PREVIEW ONLY YOUFIXTHIS.COM
YouFixThis.com
Download full manual at youfixthis.com

1 – Screen
2 – Suction line
3 – Pressure line to oil filter and cooler
4 – Oil passages to crankshaft main bearings and crankpins
5 – Oil passages to camshaft
6 – Oil passage to valve lever shaft
7 – Lubrication bore in connecting rod for piston pin and piston cooling

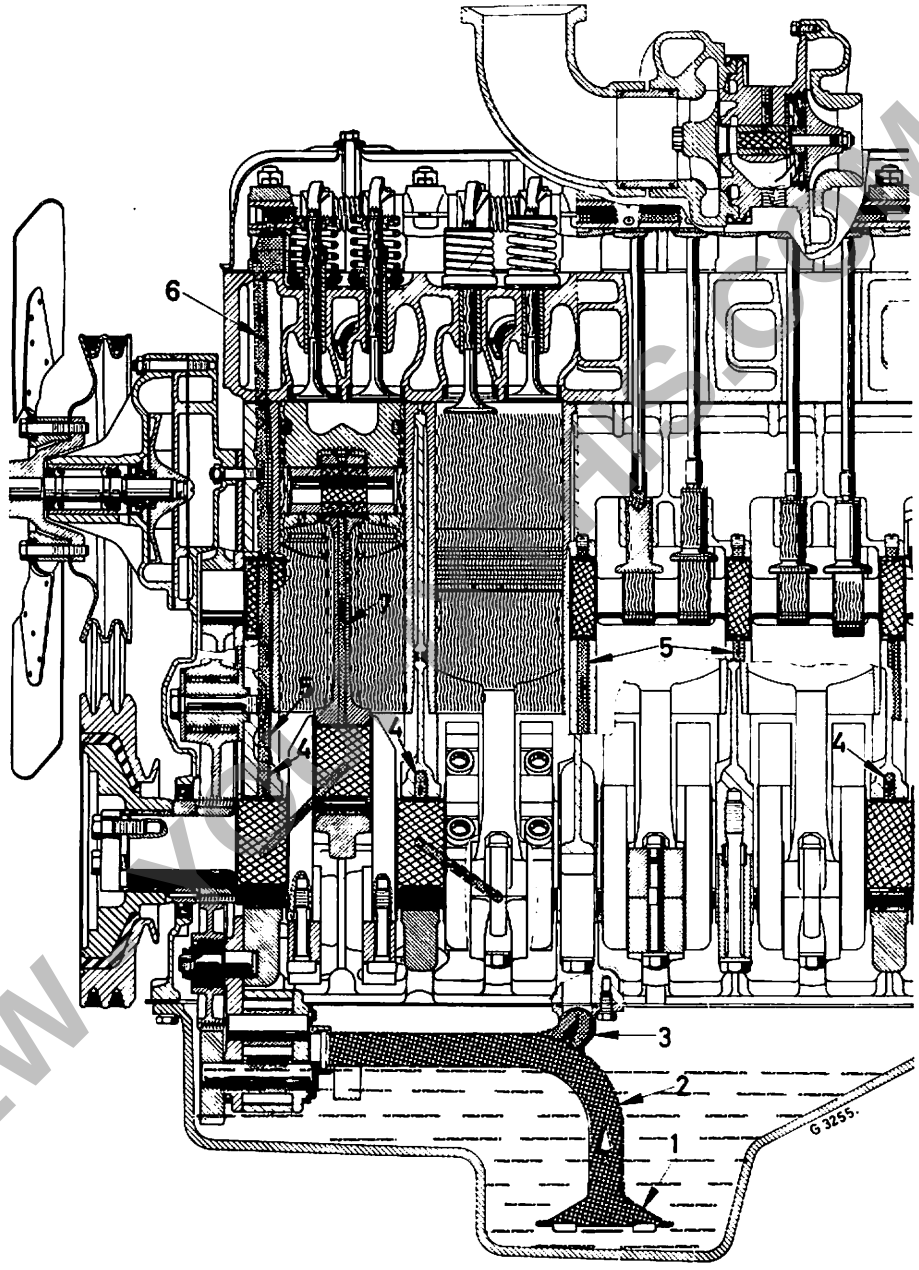


Illust. 166
Longitudinal section of typical turbocharged engine

Oil under pressure

Oil sump and suction line

PREVIEW


Download full manual at youfixthis.com

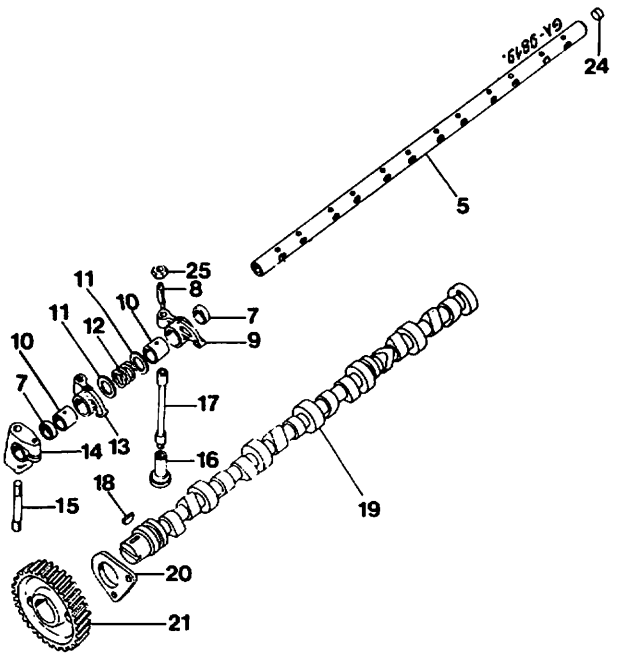


Illust. 5

## General

The valve lever assembly receives its lubrication through the hollow valve lever shaft. Oil holes are provided in the valve lever shaft (5) Illust. 5 to lubricate individual valve levers.

An oil port is provided in the shaft which must line up with the respective oil-way in the bracket. The mark (3) Illust. 8 must be in line with the clamping slot of the front bracket. Replaceable oil plugs (24) Illust. 5 are used to close up both ends of the shaft.

Valve levers for intake and exhaust valves differ in length but are provided with the same replaceable bushings which must be reamed to size after installation.

Replacement levers are supplied with bushings in place.

## Specifications

(refer to Illust. 5)

### Valve Lever and Shaft

Valve lever shaft diameter, mm (inch) . . . . . 21.56-21.59 (0.849-0.850)

Valve lever clearance on shaft, mm (inch) . . . . . 0.023-0.064 (0.0009-0.0025)

Valve lever bushing reamed to size (inner diameter), mm (inch) . . . . . 21.62-21.64 (0.851-0.852)

### Valve Lever Springs

Free length, mm (inch) . . . . . 37.7 (1.48)
Test length, mm (inch) . . . . . 25.0 (1.00)
Test load, N (lbf) . . . . . 29 (6.6)

## Removal and Disassembly

Thoroughly clean the engine externally.

Remove valve housing cover.

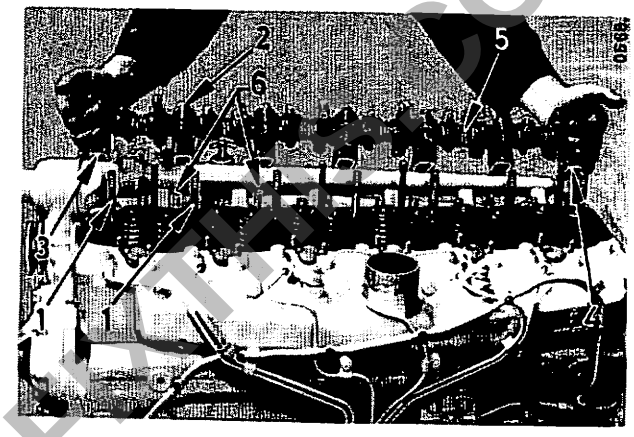


Illust. 6

1 – Studs
2 – Clamping bolts
3 – Valve lever shaft bracket, front
4 – Valve lever shaft bracket, rear
5 – Pressure spring
6 – Valve push rod

Remove nuts from studs (1) Illust. 6 and lift the complete valve lever assembly clear of the cylinder head. Loosen clamping bolts (2) and press in brackets slightly towards the center, taking care that they do not slide off the shaft, resulting in levers and springs etc. being scattered all over the floor. Slide all parts off the shaft and place them on a table in removal order to facilitate correct reassembly.

## Cleaning, Inspection, and Repair

Clean all parts in kerosene or Diesel fuel and blow dry with compressed air. Be sure all oil passages are free from sludge and sediment.

Check valve lever shaft, lever bushings, thrust washers, and spacer rings. Check bushings and valve lever shaft for scoring and out-of-round wear and replace, if necessary. Use a suitable drift punch and press plate and drive bushings out of valve levers.

Install new bushings. The new bushing must be flush with the two side faces (5) Illust. 7. Use a 3 mm = 1/8" drill to open the oil passage (4) in the bushing and remove chips and burrs. Ream the bushing to size, see "Specifications".

PREVIEW - YOUFIXTHIS.COM

YouFixThis.com



Download full manual at youfixthis.com

## Maintenance

Inspect the generator after every six months of operation to ensure long life.

The commutator should be smooth and polished with even colouring and there should be no signs of solder thrown from the commutator connections.

Brushes must be polished over the whole face, be free in their boxes and should be checked for wear. If badly, worn, replace them with new ones.

Check brush spring pressure with the fingers to see if they appear adequate.

All parts should be free from dust and all connections be clean and tight.

## Testing in Position to Locate a Fault

Before proceeding to test the generator check:

That the drive belt is serviceable and that the tension is correct.

That the generator is correctly connected to the regulator and that the ground connections is correct. See Illust. 2.

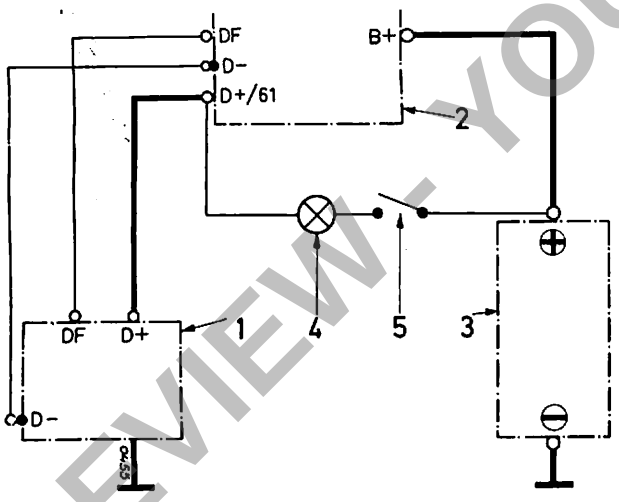


Illust. 2

1 — Generator
2 — Voltage regulator
3 — Storage battery
4 — Charge control lamp
5 — Light switch

## Checking the Generator

Switch off all lights and accessories, then disconnect the cables from the generator and link the two generator terminals with a length of wire.

Connect the plus lead of a voltmeter (0 — 20 volts range) to the linked generator terminals and the other lead to a good earth on the generator body.

Start the engine and gradually increase the engine speed. The voltmeter reading should rise without fluctuation.

*Warning:* Do not allow the voltmeter reading to reach 20 volts.

Do not race the engine in an attempt to increase the voltage. It is sufficient to run the engine up to 800 — 1000 rpm. Carry out this test as brief as possible to avoid damage to the field coils.

If there is no reading, check the brush wear.

If there is a low reading of approximately 1/2 — 1 volt, the field winding may be at fault.

If there is a reading of approximately half the normal voltage, the armature winding may be at fault.

*Note:* Excessive sparking at the commutator in the above test indicates a defective armature which should be replaced. Sparking can be seen when cover band (18) Illust. 1 is removed.

Slacken the driving belt and check the bearings for free-running by spinning the pulley by hand. If the armature fails to spin freely, with the brushes raised from the commutator, the generator should be disassembled and the bearings examined.

If the generator is in good order, remove the link wire and restore the original connections, then proceed to test the regulator.

## Checking the Regulator

*Note:* Test must be made after the generator has completed a run of several hours. If the engine has been shut down after a run, operating temperatur may be re-established by operating the regulator at normal to full load for a period equal to the down time (up to 30 minutes).

### *Testing the Switch (Return Current Switch)*

1. Cut-in voltage

   Disconnect the cable from regulator teminal B+ and make sure the bared end of the loose cable will not contact any of the metal parts.

   Connect a test lamp 12V across terminal B+ and earth.

   Connect a voltmeter to generator terminal D+ and earth.

   Start the engine and observe the voltmeter.

   With rising engine speed the test lamp must light up.

PREVIEW - YOUFIXTHIS.COM


Download full manual at youfixthis.com

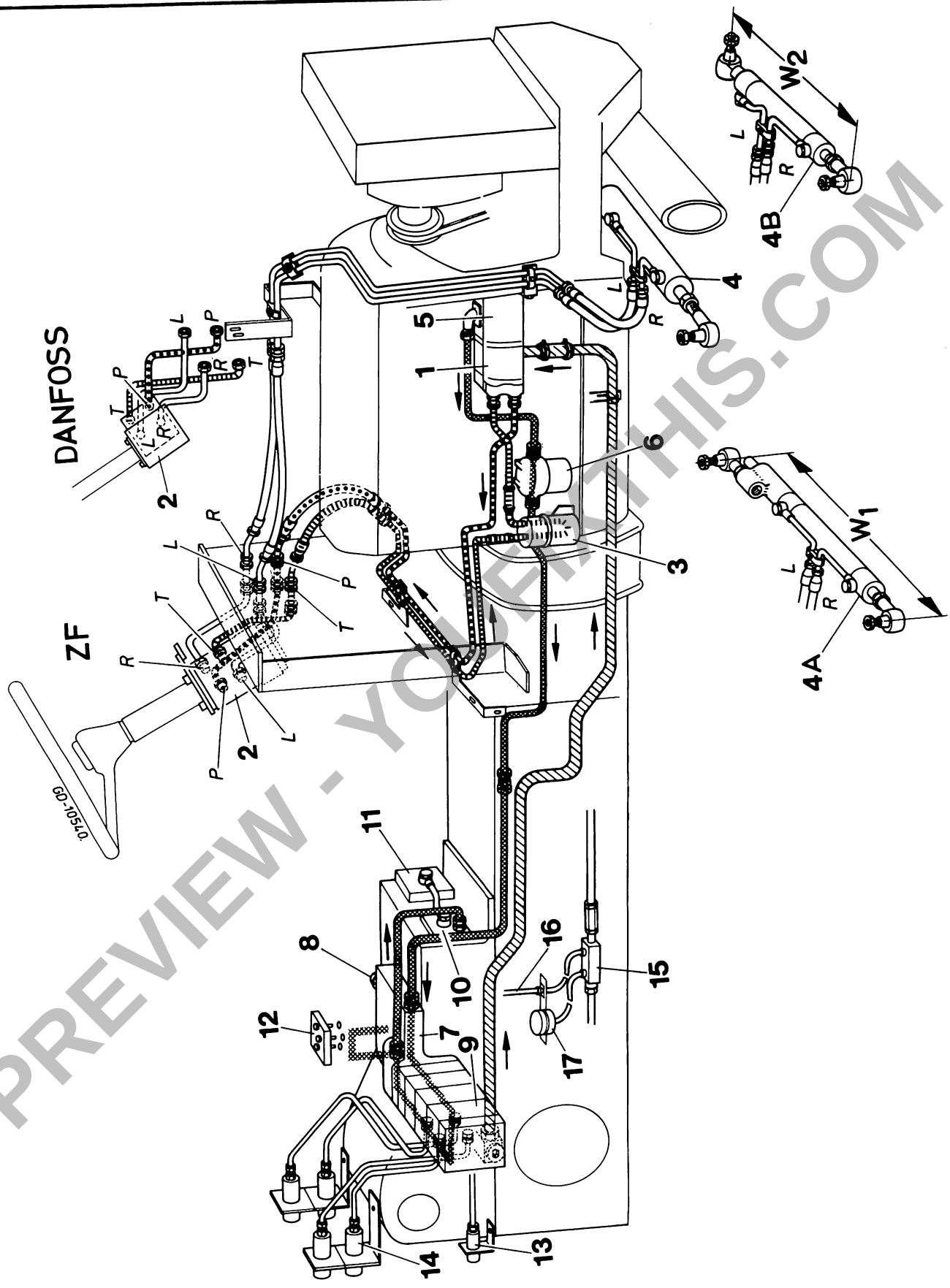


Illust. 72

PREVIEW - YOUFIXTHIS.COM

YouFixThis.com
Download full manual at youfixthis.com

| | | |

After the priming procedure is completed, make certain that the oil level is checked before the engine is put into service. Do not overfill the engine; neither should the engine be short of oil as a result of using the pressure priming procedure.

Priming the engine will minimize the possibility of scuffing or heat build-up in the running components which could lead to immediate or low mileage failures.

## Engine Run-in Schedule

*Note:* Do not run the engine at low or high idle speeds for long periods after installing new rings or sleeves, as rings will not seat during idle operation.

### *Start*

Prior to starting make sure, that
a) all bearings are pre-lubricated
b) the crankcase is filled with specified engine oil
c) the cooling system is filled to correct level
d) Precautions for alternator operation are observed.

### *Run-in*

1. Start and run the engine at 3/4 rated engine speed with no load, until operating temperature (80 – 85°C) is reached, cover the radiator if necessary. DO NOT run for over 10 Minutes.

2. Retorque cylinder head bolts.

   *Important:* DO NOT run the engine longer than 15 Minutes, before retorquing cylinder head bolts.

3. Continue according to the following chart.

*with Dynamometer*

| Engine RPM | Load % | Time minutes |
|---|---|---|
| 1000 | 40 | 5 |
| 2000 | 50 | 5 |
| rated speed | 80 | 10 |
| 100 below rated speed | 50 | 10 |

*without Dynamometer*
(In-Vehicle Run-in Procedure)

| Engine RPM | Load | Time minutes |
|---|---|---|
| 3/4 of rated | light | 5 |
| 3/4 of rated | medium | 15 |
| rated speed | full | 20 |

### *After Running-in*

Retighten manifold bolts and/or stud nuts.

Check valve clearance and readjust as necessary.

## Handing over the Engine

In the presence of the operator check engine oil level and coolant level. Test run the engine. Point out to the operator that the overhauled engine is to be treated in the same way as a new one.

*Note:* Re-torquing of cylinder head bolts in the field is not necessary when the new "Maintenance-free" cylinder head gasket has been installed. This new gasket can easily be identified by its red plastic borders around the oil and water sealing faces; refer to Illust. 53.

# SERVICE DIAGNOSIS

Much can be learned about the condition of an engine if a good visual inspection is performed before the actual cleaning operations begin.

After cleaning, the exterior of the engine should once more be inspected carefully and a note made of any parts such as brackets, covers, bolts, etc., that are bent, broken, rusted or missing completely. The crankcase or cylinder block should be checked for evidence of freezing around core plugs or for actual breaks in the water jacket.

PREVIEW - YOUFIXTHIS.COM

YouFixThis.com



Download full manual at youfixthis.com

# INDEX


| A | Page |
|---|---|
| Angle Tightening Procedure, Connecting Rod Nuts | 70 |
| **B** | |
| Balancer | 72 |
| Balancer Drive Gear | 57 |
| Balancer Weights | 75 |
| Bearing Inserts | 55 |
| Blow-by Values | 14 |
| Bolt and Nut Identification | 15 |
| **C** | |
| Camshaft and Idler Gear | 21 |
| Connecting Rods and Pistons | 63 |
| Crankcase Front Cover | 43 |
| Crankcase | 45 |
| Crankcase Counterbore Resurfacing | 47 |
| Crankcase Pressure | 14 |
| Crankshaft | 49 |
| Crankshaft Pulley | 41 |
| Cylinder Head | 27 |
| Cylinder Sleeves | 63 |
| **D** | |
| Data, Engines | 12 |
| Data, Special Nut and Bolt Torque | 15 |
| **E** | |
| Engine, Data | 12 |
| Engine, Longitudinal and Cross Section | 16 |
| Engine, Handing over | 6 |
| Engine Run-in Schedule | 6 |
| Engine Testing | 101 |
| **F** | |
| Fan | 40 |
| Flywheel | 77 |
| Fuel Feed Pump | 95 |
| **I** | |
| Idler Gear | 21 |
| Injection Nozzles | 96 |
| Injection Pump | 91 |
| Introduction | 4 |

| M | Page |
|---|---|
| Manifold, Coolant | 89 |
| Manifold, Exhaust | 39 |
| Manifold, Intake | 39 |
| Main Bearing Caps | 61 |
| **N** | |
| Nozzles and Holders | 96 |
| Nozzle Holder Sleeves | 35 |
| **O** | |
| Oil Pump | 81 |
| Oil Seal, Front | 44 |
| Oil Seal, Rear | 55 |
| **P** | |
| Pistons and Connecting Rods | 63 |
| Pump, Injection | 91 |
| Pump, Oil | 81 |
| Pump, Water | 86 |
| **R** | |
| Regrinding Crankshaft | 53 |
| Running-In | 6 |
| **S** | |
| Safety Rules | 5 |
| Service Diagnosis | 6 |
| Special Nut and Bolt Torque Data | 15 |
| Static Timing | 13 |
| **T** | |
| Technical Data, Engines | 12 |
| Thermostat | 89 |
| Timing Gear Train | 97 |
| **V** | |
| Valve Lever Assembly | 18 |
| Valves and Valve Guides | 28 |
| Valve Lash | 91 |
| Valve Timing | 24, 101 |
| V-Belt Pulley | 40 |
| Vibration Damper | 41 |
| **W** | |
| Water Pump | 86 |


PREVIEW - YOUFIXTHIS.COM



Download full manual at youfixthis.com

2. Connecting rods are not numbered. However, it is recommended to mark these accordingly so that they can be reassembled to their original positions. On DT-402 engines bearing cap of connecting rod No. 1 is marked with figure 1.

3. Also main bearing and connecting rod bearing inserts are without any markings. On removal carefully store them so they can be reassembled to their original positions when reused.

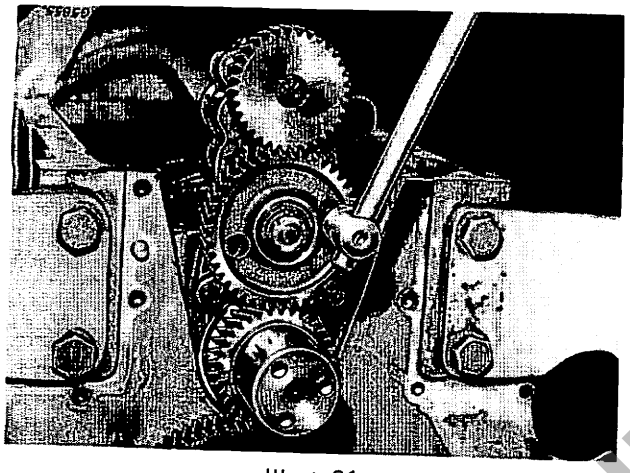

Illust. 91
Removing or installing oil pump

The oil pump may be removed as illustrated or as a unit with main bearing cap No. one.

*6-cyl.-engines:*

To remove the crankshaft, pistons must be taken out of their sleeves individually towards the cylinder head side. As soon as a pair of connecting rod caps, Illust. 90 is lifted off, turn the crankshaft until respective pistons can be pushed out of their sleeves.

*3 and 4-cyl.-engines:*

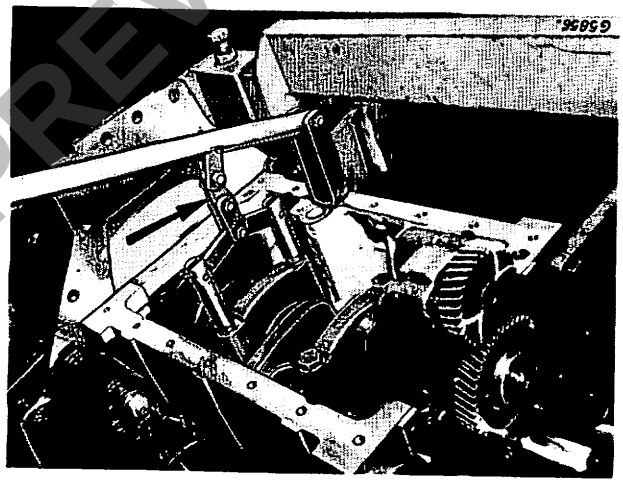

Illust. 92
Removing main bearing caps

To remove the crankshaft only the connecting rod bearing caps must be removed.

Remove bearing cap bolts and use a locally made lever tool (Illust. 92) to lift out bearing caps.

***Note:*** Two full length straight pins enter the bearing cap. The clamping effect resulting from the lever arrangement will grip the cap for removal.

Remove the crankshaft taking care not to damage machined areas by the lifting tackle.

## Cleaning, Inspection and Repair

Clean all parts thoroughly with kerosene or Diesel fuel. Blow through oilways with compressed air.

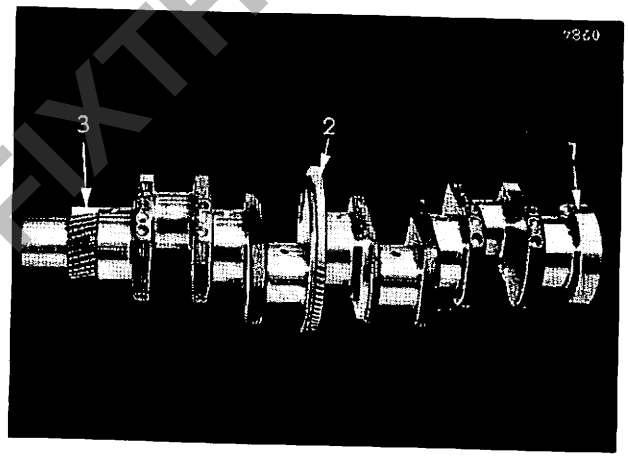


Illust. 93
Crankshaft (4-cyl.-engines)

1 – Sealing face
2 – Balancer drive gear
3 – Crankshaft pinion

### *Journals and Crankpins*

Check the crankshaft for wear on journals and crankpins. Due to intermittent load characteristics of engine operation wear becomes usually apparent as out-of-round wear. Measure at right angles, see "A" and "B" Illust. 94.

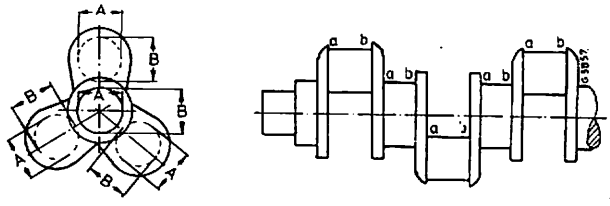


Illust. 94
Measurung points, crankshaft

PREVIEW - YOUFIXTHIS.COM
YouFixThis.com
Download full manual at youfixthis.com

*Page:*

## 4. TURBOCHARGER (AIResearch)

| | |
|---|---|
| General Maintenance | 4-1 |
| Specifications | 4-2 |
| Inspection before Removal | 4-3 |
| Turbocharger Testing | 4-3 |
| Removal | 4-4 |
| Servicing of Air Induction System after a Turbocharger Compressor Failure | 4-4 |
| Inspection after Removal | 4-4 |
| Disassembly | 4-5 |
| Cleaning | 4-6 |
| Inspection and Repair | 4-7 |
| Reassembly | 4-8 |
| Installation | 4-8 |

### — Turbocharger KKK (Schwitzer)

| | |
|---|---|
| General | 4-10 |
| Specifications | 4-10 |
| Special Tools | 4-11 |
| Removal and Disassembly | 4-11 |
| Cleaning, Inspection and Repair | 4-13 |
| Reassembly and Installation | 4-14 |

## 5. INJECTION PUMP TEST SPECIFICATIONS

| | |
|---|---|
| **— Model "VA ... CR ..."** | 5-1 |
| **— Model "VE ... F ..."** | 5-201 |

PREVIEW - YOUFIXTHIS.COM



Download full manual at youfixthis.com

Switch on the test bench and adjust fuel supply pressure to 20 kPa.

Position the plunger in bottom dead center and zero the dial indicator (fuel is flowing out of pipe (6)).

Slowly turn the test bench drive clockwise (viewed from pump drive end) until fuel outflow (6) is reduced to a mere trickle.

This is the point of port closure, i.e. injection begin.

Record the dial indicator reading at this point.

Compare the recorded figure with the spcified "PL" as listed in the Testing and Adjustment Chart.

If the recorded figure exceeds the specified "PL" dimension, place a thicker shim (52) under the plunger foot and vice versa.

In case the actual shim thickness required lies between two available shims of the assortment, use the thicker shim to correct plunger lift to port closure.

Recheck injection pump timing.

### *Setting the Timing Pointer*

With plunger dimension "PD" or plunger lift to port closure "PL" correct, adjust the timing pointer.

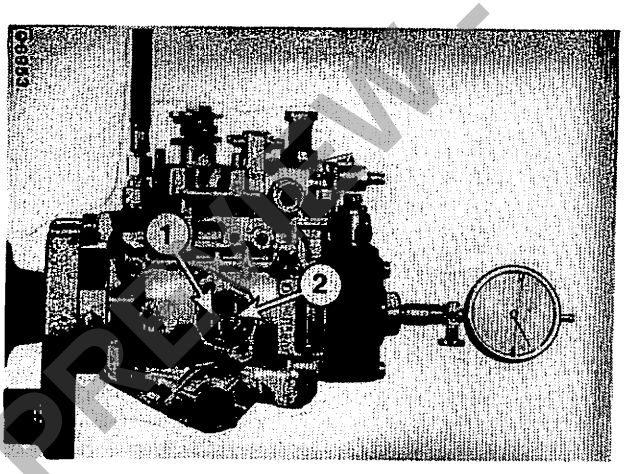


Illust. 57

1 – Timing pointer
2 – Scribe line on the face cam

Install a dial indicator in place of the plunger end plug. Illust. 57.

With the plunger in bottom dead center, pre-load the dial indicator to about 4 mm and zero the dial.

Turn the pump drive shaft clockwise (viewed from drive end) until the plunger travels (lifts) 1 mm.

At this point align pointer (1) with the scribe line (2) and lock the pointer retainer screw.

The keyway in the drive shaft must be up (in 11 o'clock position) when setting the pointer.

To complete the pump proceed as follows:

Remove dial indicator or pre-stroke measuring device.

Remove the hydraulic head, auxiliary spring (if used) and selected shim (52).

Remove the temporarily installed parts, as pump housing cover, governor shaft (108), dog-point screws (104), and plug M12 x 1.5.

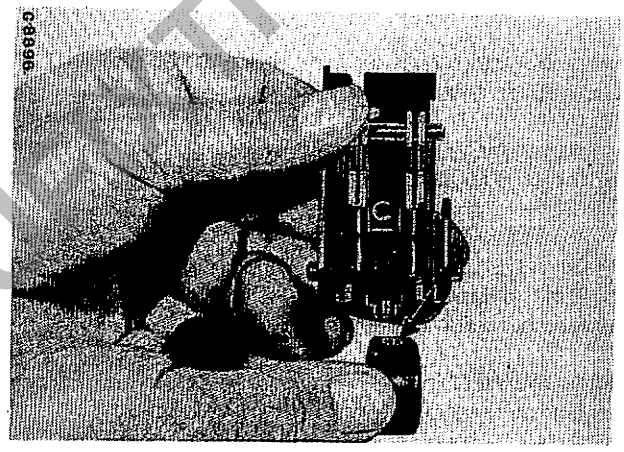


Illust. 58

Be sure the ball joint on the governor lever assy. slides freely in the bore in the metering sleeve, Illust. 58.

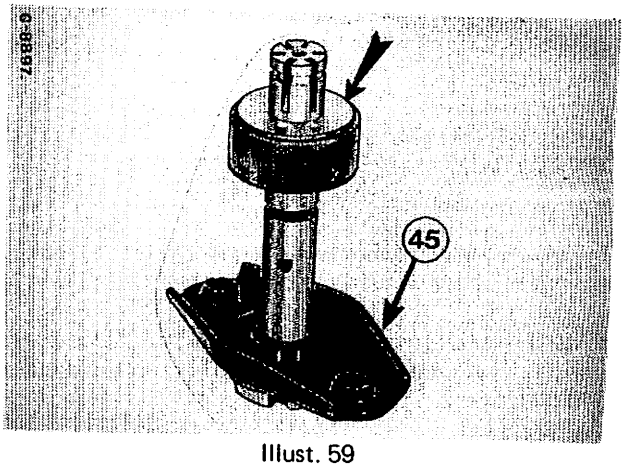


Illust. 59

Place shim (43), slotted thrust washer (44), and spring (45) on the plunger foot respectively.

PREVIEW - YOUFIXTHIS.COM


Download full manual at youfixthis.com

*Engine: D–155* *Application: 503 Machine Serial No. 251818 and up*

*Injection Pump: EP/VA3/100H 1200 CR 9-6 (3 228 769 R91)*

| | | |
|---|---|---|
| Pump speed | | 1/2 engine speed |
| Engine speed: | | |
| low idle | 1/min | 650 – 750 |
| high idle | 1/min | 2525 – 2585 |
| rated load | 1/min | 2400 |
| minimum overload | 1/min | 1600 |
| Rated power at rated load speed | kW | 32 |
| Max. torque at minimum overload speed | daNm | 14.3 |
| Torque rise | % | 12 ± 4 |
| Static timing – engine | degrees BTDC | 10 |
| Start to advance – engine speed | 1/min | 400 |
| Total advance – engine | degrees BTDC | |
| Pump advance at minimum overload speed | mm | 4 |
| Full pump advance at rated load speed | mm | $5^{+0.4}_{-0.3}$ |
| Charging pump pressure at: | | |
| low idle | kPa | 250 |
| minimum overload speed | kPa | 430 |
| rated load speed | kPa | 590 |
| Max. permissible vacuum at inlet side of pump | kPa | – 20 |
| Fuel rator specifications: | | |
| Fuel consumption at: | | |
| rated load speed | kg/h | 8.2 |
| time | s/l | 366 |
| 100/min below rated speed | kg/h | 7.8 |
| time | s/l | 385 |
| minimum overload speed | kg/h | 5.7 |
| time | s/l | 527 |
| Turbocharger, boost pressure at rated speed | kPa | |

Engine power, fuel consumption and charging pump pressure ± 3 %

PREVIEW - YOUFIXTHIS.COM



Download full manual at youfixthis.com

## Flow Bench Test Specifications

| | | | | |
|---|---|---|---|---|
| *Engine:* | *D–239* | | *Rated Speed:* | *2100/min.* |
| *Application:* | *3654, 3654 S.U., 125B, TD–8B, 644 S.U. H.D./4W.D., 3500A G.D. (Germany)* | | | |
| Injection Pump | IHC–No. | | Bosch–No. | |
| | 3 144 310 R91 | | EP/VA4/100H1050CR12-4 | |
| | | | | |
| | | | | |
| Correction of Control Specifications acc. to "Bosch" Test Instruction VDT–WPP 161/4 or Pre-Adjusting Dimensions see "Bosch" Repair Manual VDT–WIP 161/4 | | | | |
| Plunger Lift to Port Closure | 0.5 ± 0.02 (± 0.04) mm | | | |
| Static Timing | Alignment of the Pointer at 1 mm Plunger Stroke (ref. to Outlet 'A') | | | |
| 1. Control Specifications | 1/min. | | Delivery Difference $cm^3$ / 1000 Strokes | |
| 1.1 Injection Advance | 800 | 3.8 - 4.8 mm | | |
| 1.2 Charging Pump Pressure | 800 | 480 - 530 kPa | | |
| 1.3 Full Load Delivery | 800 | 72.0 - 73.0 $\frac{cm^3}{1000\ Strokes}$ | 2.5 | |
| 1.4 Idler-Governor Run-Out | 360 | 14.0 - 20.0 " | 3 | |
| 1.5 Start | 100 | min. 85 " | Opening P. 20 MPa | |
| 1.6 End-Governor Run-Out | 1080 | 31.0 - 39.0 " | | |
| 2. Check Data and in Brackets (Re-check Data) | | | | |
| 2.1 Injection Advance | 1/min. | 300-450 (270-480) | 800 | 820-970 (790-1000) |
| | mm | Begin | (3.5-5.1) | End (5.2-5.9) |
| 2.2 Charging Pump Pressure | 1/min. | 200 | 800 | 1050 |
| | kPa | 270-320 (250-340) | (460-550) | 580-630 (560-650) |
| 2.3 Feed Quantity | | | | |
| Speed Lever End-Position | Feed Lever Full | 1/min. | Delivery $cm^3$ / 1000 Strokes | Overflow Quantity $cm^3$ / 10 sec. |
| | | 1100 - 1150 (1085 - 1165) | 10.0 | |
| | | 1080 | (30-40) | |
| | | 1000 | 70.0-72.5 (69.5-73.0) | |
| | | 800 | (71.5-73.5) | 55-100 (40-110) |
| | | 500 | 73.5-77.5 (72.5-78.5) | |
| | | | | |
| | | | | |
| | Stop | 1050 | 0 | |
| Idling Position | Full | 410 - 460 (390 - 480) | 0 | |
| | | 360 | (12-22) | |
| | Start | 100 | min. 85 | Opening Pressure 20 MPa |
| | | 220 (200) | min. 85 | |
| | | 340 (360) | less than 60 | |

1: Shim thickness under advance piston spring 3.4 mm
2: Pre-load length of governor spring 24.6 mm

(NEZG 2739)

PREVIEW - YOUFIXTHIS.COM


Download full manual at youfixthis.com

## Fuel Rator Test Specifications

*Engine: D–310* *Application: 715*

*Injection Pump "Bosch" EP/VA6/100H 1200 CR 191 (CRV 3613-1) (3 218 337 R91)*

| | |
|---|---|
| Pump speed | 1/2 engine speed |
| Low idle speed – engine | 900 – 950 |
| High idle speed – engine | 2615 – 2675 |
| Rated load speed – engine | 2400 |
| Minimum overload speed – engine | 1600 |
| Max. torque daNm (ft.lbs) at 1600 engine rpm | 30.4 (224.2) |
| Rated kW (HP) at engine rated load speed | 69.7 ( 93.5) |

### *Timing Advance*

| | |
|---|---|
| Static timing – engine, degrees BTDC | 12 |
| Total advance – engine, degrees BTDC | 23 |
| Start to advance – engine rpm | 900 |
| Pump advance at minimum overload engine speed (travel of advance piston) mm (inch) | 3 (.118) |
| Full pump advance (travel of advance piston) mm (inch) | 5 (.197) |

### *Charging Pump Pressure, at:*

| | |
|---|---|
| Low idle, MPa (PSI) | 0.37 – 0.39 (54 – 57) |
| Minimum overload speed, MPa (PSI) | 0.49 – 0.53 (71 – 77) |
| Rated load speed, MPa (PSI) | 0.61 – 0.67 (88 – 97) |
| Max. permissible vacuum at inlet side of pump kPa (PSI) | 20 ( 2 ) |

### *Fuel Rator Specifications* **

| | |
|---|---|
| Maximum fuel at rated load speed kg/h (lbs/hr) | 16.3 ( 35.93) |
| Minimum time sec/1000 ccm (sec/qt) * | 182 (172 ) |
| Fuel at 2300 rpm engine speed kg/h (lbs/hr) | 15.7 ( 34.61) |
| Minimum time sec/1000 ccm (sec/qt) * | 188 (180 ) |
| Fuel at minimum overload speed kg/h (lbs/hr) | 11.6 ( 25.57) |
| Minimum time sec/1000 ccm (sec/qt) * | 255 (241 ) |
| Fuel temperature at overflow line °C (°F) | 48 – 53 (118 – 127) |

* US qt

Engine power, fuel consumption and charging pump pressure ± 3 %

PREVIEW - YOUFIXTHIS.COM



Download full manual at youfixthis.com

## Fuel Rator Test Specifications

*Engine: D–358* *Application: 3964 (xxx–), 3965 (xxx–), 630, 630W*

### *Injection Pump "Bosch" EP/VA6/100H 1250 CR 87 (3 144 648 R91)*

| | |
|---|---|
| Pump speed | 1/2 engine speed |
| Low idle speed – engine | 500 – 600 |
| High idle speed – engine | max. 2760 |
| Rated load speed – engine | 2500 |
| Minimum overload speed – engine | 1600 |
| Max. torque daNm (ft.lbs) at 1600 engine rpm | 36.43 (264) |
| Rated kW (HP) at engine rated load speed | 76 (102) |

### *Timing Advance*

| | |
|---|---|
| Static timing – engine, degrees BTDC | 18 |
| Total advance – engine, degrees BTDC | 30 |
| Start to advance – engine rpm | 1000 |
| Pump advance at minimum overload engine speed (travel of advance piston) mm (inch) | 2.6 (.102) |
| Full pump advance (travel of advance piston) mm (inch) | 5.5 (.217) |
| Plunger lift to port closure mm (inch) | -0.4 ± 0.04 (- .016 ± .0016) |

### *Charging Pump Pressure, at:*

| | |
|---|---|
| Low idle, MPa (PSI) | 0.18 – 0.21 (26 – 31) |
| Minimum overload speed, MPa (PSI) | 0.38 – 0.42 (55 – 60) |
| Rated load speed, MPa (PSI) | 0.53 – 0.60 (76 – 86) |
| Max. permissible vacuum at inlet side of pump kPa (PSI) | 20 (2.9) |

### *Fuel Rator Specifications*

| | |
|---|---|
| Maximum fuel at rated load speed kg/h (lbs/hr) | 18.82 ( 41.5) |
| Minimum time sec/1000 ccm (sec/qt) * | 161 (152 ) |
| Fuel at 2400 rpm engine speed kg/h (lbs/hr) | 18.14 ( 40.0) |
| Minimum time sec/1000 ccm (sec/qt) * | 167 (158) |
| Fuel at minimum overload speed kg/h (lbs/hr) | 14.51 ( 32.0) |
| Minimum time sec/1000 ccm (sec/qt) * | 208 (197 ) |
| Fuel temperature at overflow line °C (°F) | 53 – 57 (127 – 135) |

* US qt

Engine power, fuel consumption and charging pump pressure ± 3 %

PREVIEW - YOUFIXTHIS.COM



Download full manual at youfixthis.com

## Flow Bench Test Specifications

| *Engine:* *DT–402 (with Aneroid)* *Rated Speed: 2200/min.* | | | | |
|---|---|---|---|---|
| *Application:* *1455, 1455 XL* | | | | |
| Injection Pump | IHC–No. | | Bosch–No. | |
| | 3 228 639 R91 | | VE6/12F 1100 R102 | |
| Correction of Control Specifications acc. to "Bosch" Test Instruction VDT–W460/300 or Pre-Adjusting Dimensions see "Bosch" Repair Manual VDT–W460/100 | | | | |
| Plunger Lift to Port Closure | 0.2 ± 0.04 mm | | | |
| Static Timing | Alignment of the Pointer at 1 mm Plunger Stroke (ref. to Outlet 'A') | | | |
| 1. Control Specifications | 1/min. | | Delivery Difference $cm^3$ / 1000 Strokes | Boost Pressure kPa |
| 1.1 Injection Advance | 500 | 3.2 - 3.6 mm | | 13 |
| 1.2 Charging Pump Pressure | 500 | 500 - 580 kPa | | 13 |
| 1.3 Full Load Delivery | 800 | 101-102 $\frac{cm^3}{1000\ Strokes}$ | 4.0 (4.5) | 40 |
| 1.4 Idler-Governor Run-Out | 375 | 13.7-19.7 " | 3.5 (4.5) | |
| 1.5 Start | 100 | min. 110 " | Opening P. 20 MPa | |
| 1.6 End-Governor Run-Out | 1170 | 39.3-47.3 " | | 49 |
| 2. Check Data and in Brackets (Re-check Data) | | | | |
| 2.1 Injection Advance | 1/min. | 300 | 500 | 600 |
| | mm | 0.2-0.4 | 2.7-4.4 | End 4.1 |
| 2.2 Charging Pump Pressure | 1/min. | 400 | 500 | 1100 |
| | kPa | 430-510 | 480-600 | 740-820 |
| 2.3 Feed Quantity | | | | |
| Throttle Lever End-Position | 1/min. | Delivery $cm^3$ / 1000 Strokes | Overflow Quantity $cm^3$ / 10 sec. | Boost Pressure kPa |
| | 1205-1255 | 10.0 | | 49 |
| | 1170 | (38.8-47.8) | | 49 |
| | 1100 | 94.4-97.4 (92.9-98.9) | | 49 |
| | 800 | (98.5-104.5) | | 40 |
| | 500 | 79.8-83.8 (78.1-85.6) | | |
| | 500 | 85.7-90.7 (84.2-92.2) | 20-47 | 13 |
| | | | | |
| | 100 | min. 110 | Nozzle Opening Pressure 20 MPa | |
| | 200 (190) | min. 100 | | |
| | 440 | | | |
| Idle Position | | 0 | | |
| | | | | |
| | 375 | 11.7-21.7 | | |
| Stop (Mechanical) | 1100 | 0 | | |
| Shut-off Solenoid | | | | |

2.4 Electrical Shut-off
Switch-on Voltage V
Test Voltage V

3. Dimension for mounting and adjusting

| Designation | min. |
|---|---|
| K | ± 0.1 |
| KF | ± 0.1 |
| MS | ± 0.1 |
| SVS | max. |
| H | |
| Xb | |

***Note:*** Abbreviations, see item 5 under Illust. 1

(EGD 1072)

PREVIEW - YOUFIXTHIS.COM


Download full manual at youfixthis.com

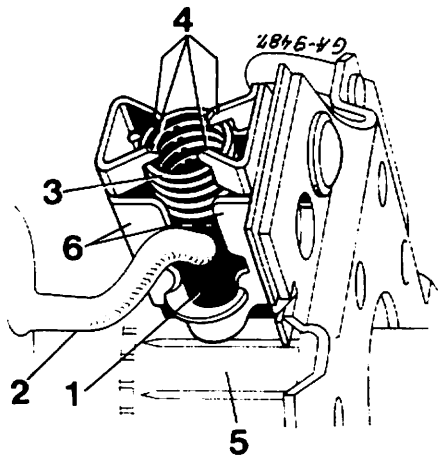


Illust. 47

1 — Carbon brush
2 — Lead, flexible
3 — spring, coil
4 — Flaps, retainer
5 — Commutator
6 — Box, brush

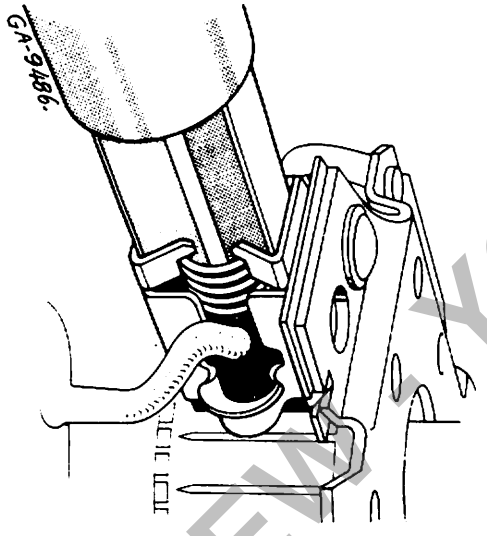


Illust. 48

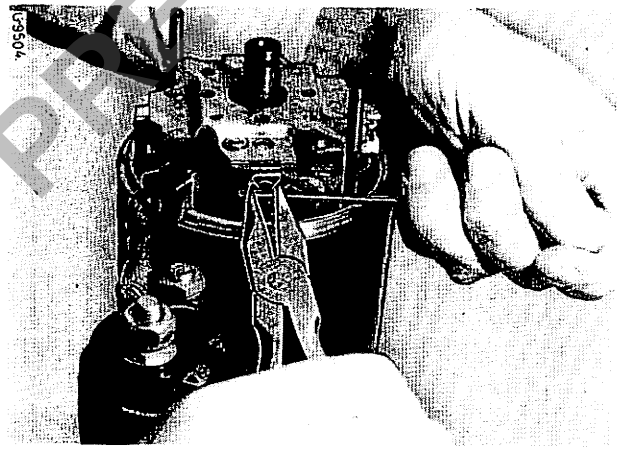


Illust. 49

Take care when soldering, that material does not penetrate copper leads (2) Illust. 47 so as to retain their flexibililty. Check tension of coil springs (3) and replace if in doubt.

Take special care when replacing carbon brushes. Bend retainer flaps (4) to approx. 30° without deforming box (6). Use special Bosch tool KDAL 5030 if possible, see Illust. 48.

If a pair of suitable pliers is used to bend flaps, be sure to check for free movement of brushes in their boxes.

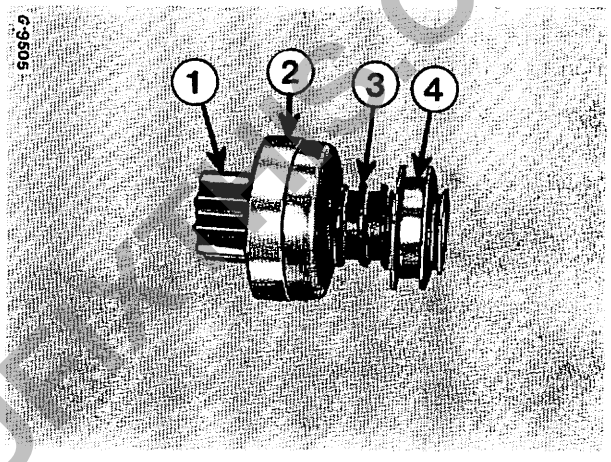


Illust. 50

1 — Pinion
2 — Clutch, six-roller
3 — Jump spring
4 — Collar

### *Overrunning Clutch Assy*

Check overrunning torque of clutch and compare with "Mechanical Specifications". Replace the oilless bushing in pinion end if worn. Replace the clutch assy with a new one if any other components are found to be defective.

## Reassembly

Reassembly is the reversal of the disassembly procedure. Observe strict cleanliness.

Lubricate the components shown in Illust. 51 with Bosch grease Ft 2 v 3 or equivalent.

Take care that:

a) The yoke assy fits properly in front drive housing.

b) Carbon brushes are free to move in their boxes.

c) Stud nuts have washers and are evenly tightened and sealed.

PREVIEW - YOUFIXTHIS.COM

YouFixThis.com



Download full manual at youfixthis.com

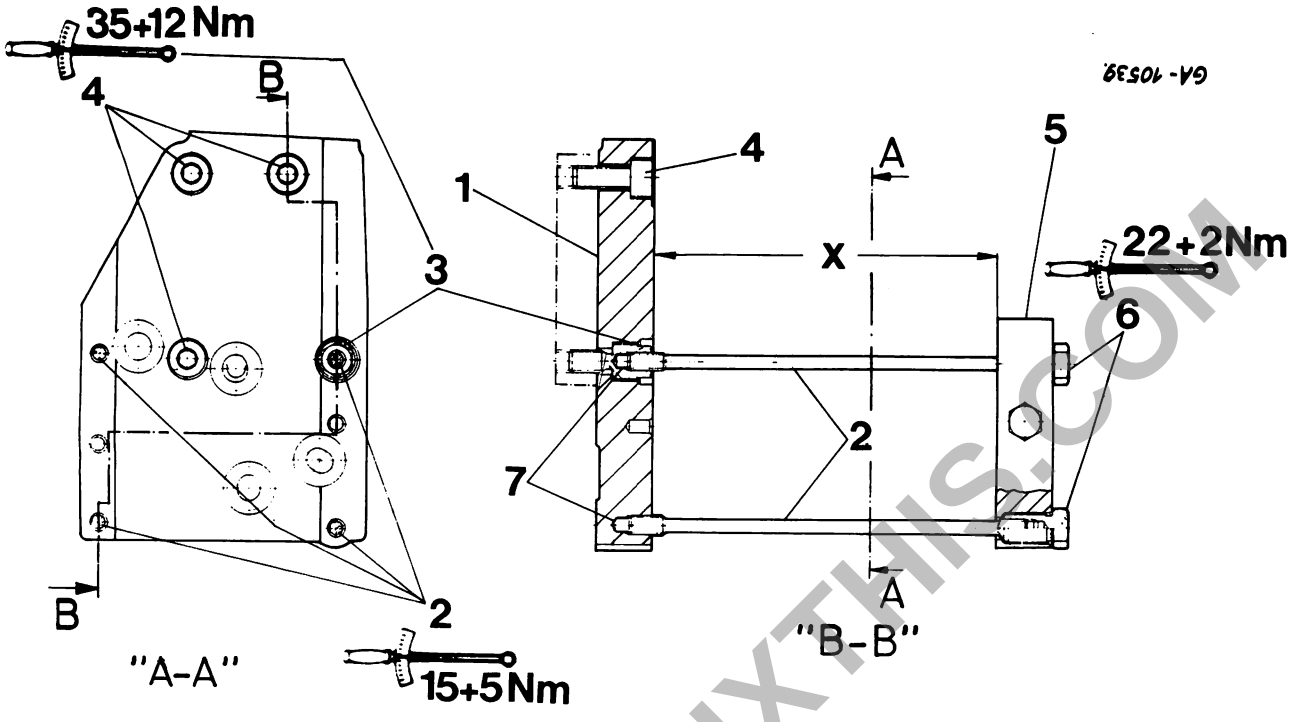


Illust. 71

X – Auxiliary control valve mounting space
1 – Plate
2 – Tie rods
3 – Adapter bolt
4 – Bolts
5 – End plate
6 – Tie rod nuts
7 – Tapered DIA of (2)

***Note:*** Insert tie rods (2) with tapered DIA (7) into plate bores.

Observe special torques.

Replace all sealing elements.

PREVIEW - YOUFIXTHIS.COM

YouFixThis.com

Download full manual at youfixthis.com

## TURBO CLUTCH

### General

*Note:* Individual parts are marked consistently with the same reference number throughout this section.

### Specifications

Filling capacity in liters

| | 1255 XL<br>1255 | 1455 XL<br>1455 |
|---|---|---|
| Initial filling | 8.8 + 0.1 | 9.2 + 0.1 |
| Oil change | 8.7 + 0.1 | 9.1 + 0.1 |

*Special oil:*
DEXRON ATF

*Temperature sender unit warning light*

| | |
|---|---|
| switch-on point | 90°C |
| switch-off point | 85°C |

For further technical data, such as special torques, adjustment details etc. refer to relevant assembly drawings and corresponding instructions.

**1** ➡

Power flow of turbo clutch

X – Power flow vibrations and shock waves without turbo clutch
Y – Power flow vibrations and shock waves with turbo clutch.
M – Engine power input
S – Flywheel
P – Impeller
T – Turbine wheel
Z – Pressure plate
A – Power output to transmission

*Note:* All ref. nos. correspond with Illust. 35, see legend.

### Stall Check

If loss of traction is evident and the clutch oil tends to heat up easily check turbo clutch performance as follows:

1. With the machine at operating temperature check engine speed at low and high idle.

2. Apply parking and service brakes.

3. Shift into 6th gear, road range.

4. Accelerate engine to full load (max. throttle). Engine speed should stabilize below 1100/min.

*Caution:* Do not extend this check to more than 10 – 15 seconds to avoid overheating of the turbo clutch.

If engine speed does not stabilize as indicated, check turbo clutch oil level as follows:

Remove cover (42) Illust. 2

**2** ➡

12 – Turbo clutch housing
42 – Cover
43 – Air intake funnel

**3** ➡

12 – Turbo clutch housing
A – Oil level "1255" and XL
B – Oil level "1455" and XL
13 – Oil level and filler plug

Align plug (13) with the upper half of the service opening using a srewdriver as described under "Changing Oil". Remove plug (13).

Carfully turn clutch housing downwards to align lower edge of plug opening with oil level mark (A or B).

*Note:* It is important for a correct reading that the eye level is horizontal with the respective oil level mark (A or B).

In this position oil level must be at lower edge of plug opening. If necessary use a suitable funnel and fill up clutch housing with recommended oil. Replace plug (13) using new packing ring and tighten to recommended torque. See Illust. 35. Replace cover (42) Illust. 2. Repeat stall check.

### Changing Oil

Remove cover (42) Illust. 2. Be sure the machine is at operating temperature.

Turn turbo clutch in such a way that plug (13) Illust. 3 is in its bottommost position.

To do this, use a screwdriver through the service opening levering on the cooling fins of the clutch housing.

Remove plug (13) and allow the oil to drain out completely.

Replace the plug to prevent ingress of dirt as the clutch is turned to its filling position.

Align the plug with the upper half of the service opening and remove the plug.

Using a suitable funnel, fill the clutch housing with recommended oil, as shown in Illust. 4 making sure to use the exact quantity specified under "Filling Capacities".

Continued on page 9.

PREVIEW - YOUFIXTHIS.COM


Download full manual at youfixthis.com

# PREVIEW ONLY

You're viewing 25 of 641 pages

## The full manual includes:

- All 641 pages, complete
- Searchable PDF (find any keyword)
- No watermarks
- Instant download
- Print-ready quality

GET FULL MANUAL NOW

**Case IH 1255, 1455, 743XL, 745XL, 844XL, 856XL, 955XL, 1055XL, 956XL, 1056XL, 1255XL, 1455XL Workshop Manual**

**Scan or click anywhere**
**youfixthis.com**

*Click anywhere on this page to get the full manual*