OPERATING CONTROLS
Tractor Without Cab
(Instrument Panel)

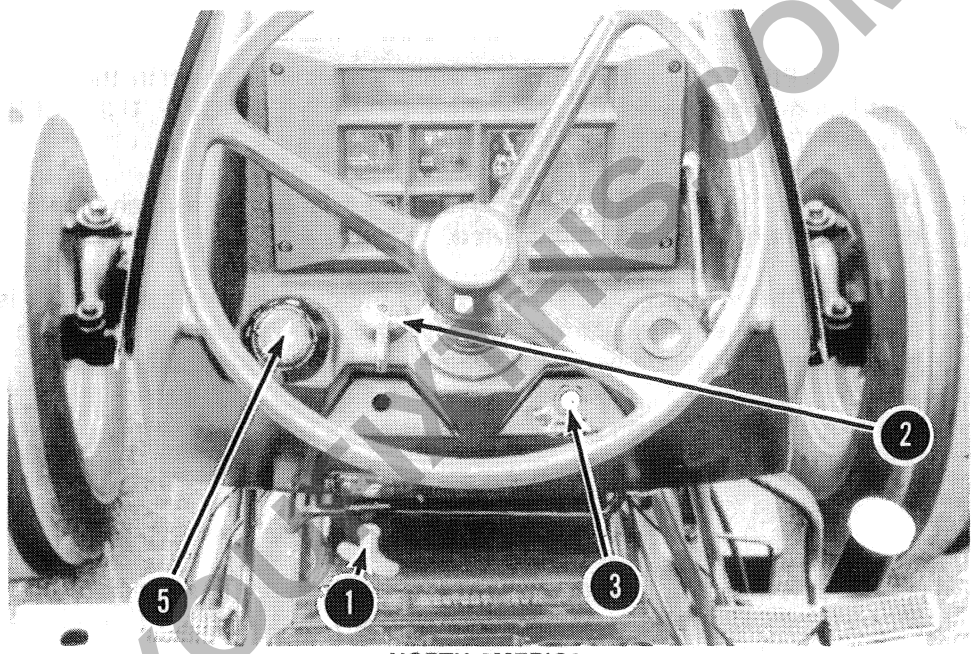

NORTH AMERICA
Figure 52

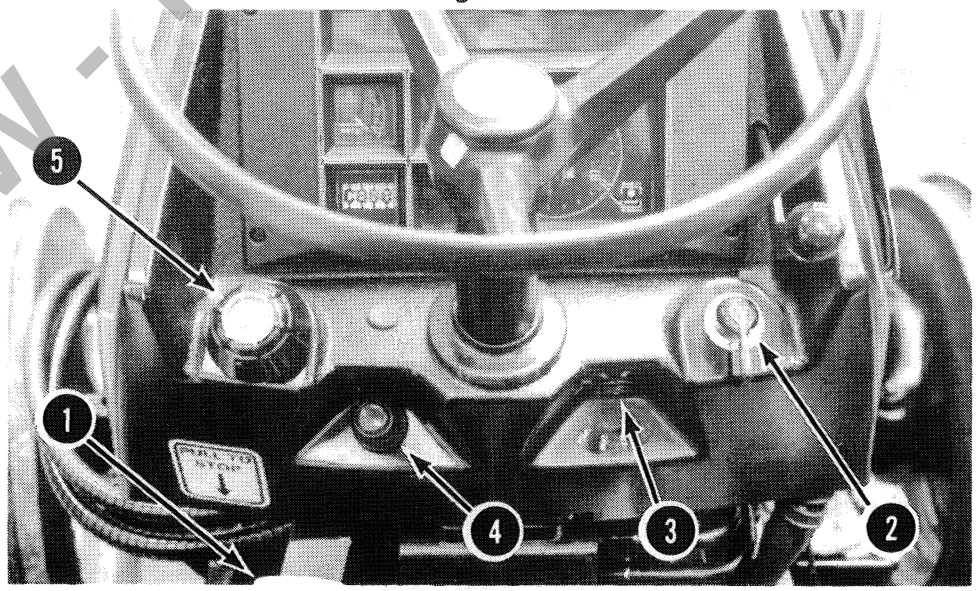

NOT NORTH AMERICA
Figure 53

PREVIEW - YOUFIXTHIS.COM

Download full manual at youfixthis.com

SAFETY

Safety Rules

Understand that your safety and the safety of other persons is measured by how you service, and operate this machine. Know the positions and operations of all controls before you try to operate. MAKE SURE YOU CHECK ALL CONTROLS IN A SAFE AREA BEFORE STARTING YOUR WORK.

READ THIS MANUAL COMPLETELY and make sure you understand the controls. All equipment has a limit. Make sure you understand the speed, brakes, steering, stability, and load characteristics of this machine before you start to operate.

The safety information given in this manual does not replace safety codes, insurance needs, federal, state and local laws. Make sure your machine has the correct equipment needed by the local laws and regulations.

J I Case is continuing to work for your safety by making tractors with better protection and by giving these rules for safe operation.

Before Starting

CAUTION: ***To help prevent personal injuries during tractor operation and maintenance, use safety shoes, a hard hat, safety glasses or goggles and good fitting clothing.***

CAUTION: ***Provide a first aid kit for use in case of accident.***



CAUTION: ***It is good practice to carry a fire extinguisher on the tractor. Be sure that the extinguisher is properly maintained and be familiar with its proper use.***

PREVIEW - YOUFIXTHIS.COM

Download full manual at youfixthis.com



1394 TRACTOR WITH CAB
Figure 2

PREVIEW - YOUFIXTHIS.COM

Download full manual at youfixthis.com

1. ENGINE STOP CONTROL - Pull the control to stop the engine. The control must be pushed in to start the engine.

2. DIRECTION INDICATOR SWITCH - To indicate that you will turn the tractor to the right, press the switch to the right. Press the switch to the left to indicate a left turn.

3. STARTER KEY SWITCH - Four position switch as follows:
   OFF Position -The key is in the vertical position. You can only remove the key in this position.
   ACCESSORY Position - First position clockwise from OFF. This position energizes the electrical accessories that is windshield washers indicators, etc. The alternator and oil pressure lamps will illuminate. The fuel and coolant temperature gauges will show correct values.
   HEAT Position -Second position clockwise from OFF. This position engergizes the Thermostart for cold starting.
   START Position -Turn the key fully clockwise against the pressure of the spring in the switch. Release the key when the engine starts.

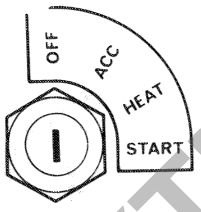

4. HAZARD WARNING SWITCH (Not North America) - Pull the knob to operate the hazard warning lamps (all indicators operating). A red lamp in the knob will operate on and off. Push the knob to stop the lamps from operating.

5. HORN - Press the center of the main lamp switch to operate the horn.



PREVIEW - YOUFIXTHIS.COM

Download full manual at youfixthis.com

COLD TEMPERATURE OPERATION

Before you start and operate your Case Tractor during cold ambient temperatures, check the following points.

1. BATTERIES - Must have a full charge.

2. FUEL - Must be clean and with no water contamination.

3. ENGINE OIL - Must have the correct viscosity for the ambient temperature range.

4. TRANSMISSION HYDRAULIC FLUID - Use Case Transmission Final drive (TFD) fluid or equivalent.

5. COOLING SYSTEM - Must have Ethylene Glycol solution for protection.

6. TIRES - If there is liquid ballast in the tires, the tires must have protection against temperatures below 0° C (32° F). See your Authorized Case Dealer.

7. STOPPING THE ENGINE - Permit the engine temperature to decrease before stopping.

8. CONDENSATION IN FUEL TANK - To prevent condensation in the fuel tank and water entering the fuel system, fill the fuel tank after each operating day.

9. FUEL PUMP WATER TRAP - During cold ambient temperatures, make sure you remove water from the water trap each day or damage will occur.

WARNING: ***The braking distance will increase in conditions of mud, ice or whenever the traction at one wheel is less than the traction at the opposite wheel. The operator must allow adequate distance to stop in these conditions.***

PREVIEW - YOUFIXTHIS.COM

Download full manual at youfixthis.com

Single Acting Equipment

Single acting equipment can be operated by a double acting remote valve. Connect the implement coupling to the right-hand tractor coupling.

Move the control lever forward into the first detent position to increase the cylinder length (raise). The control lever will automatically return to the center (Neutral) position when the implement cylinder is at the end of the stroke. Move the control lever to the center (Neutral) position to stop implement cylinder movement.

To shorten the implement cylinder (lower), move the control lever fully forward into the float detent position. The control lever will not return to the center (Neutral) position when the implement cylinder is at the end of the stroke. Move the control lever to the center (Neutral) position quickly to stop implement movement.

NOTE: *Always connect the couplings so that when the control lever is moved forward, the implement will lower.*

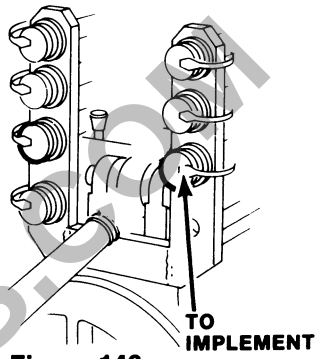

Figure 146

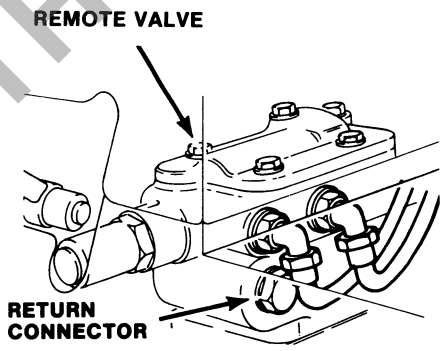

REMOTE VALVE WITH DETENT CENTER

Figure 147

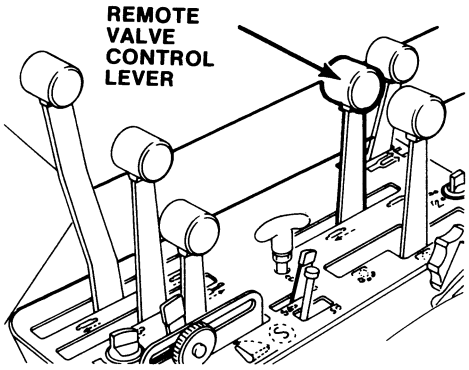

Figure 148

PREVIEW - YOUFIXTHIS.COM

Download full manual at youfixthis.com

SERIAL NUMBERS

When parts or assistance are needed, or when writing to your Authorized Case Dealer, always give this information:

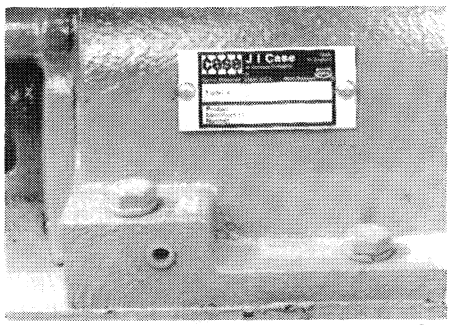

MODEL AND PRODUCT IDENTIFICATION NUMBER PLATE

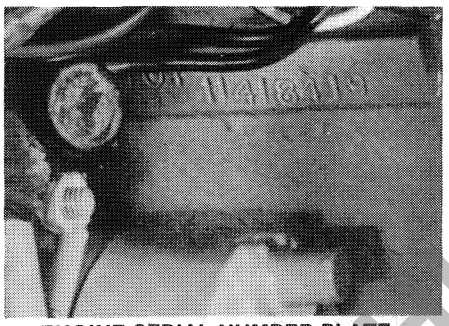

ENGINE SERIAL NUMBER PLATE

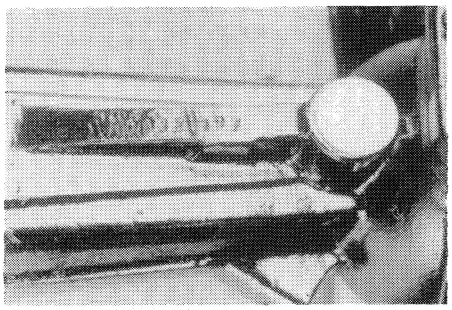

MFD AXLE PRIOR TO PIN 11503001



CAB SERIAL NUMBER PLATE

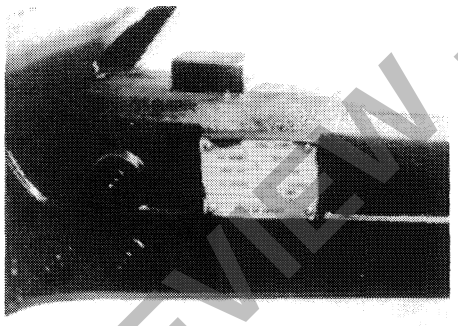

MFD AXLE FROM PIN 11503001
MFD AXLE SERIAL NUMBER

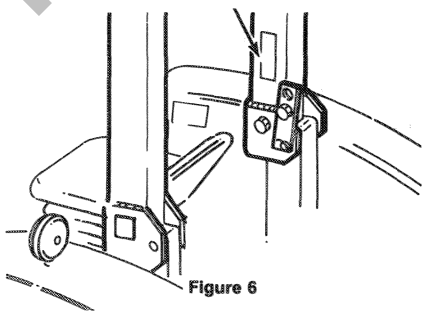

Figure 6

ROPS SERIAL NUMBER PLATE

Figure 3

Write the serial numbers of your tractor on the lines below.

MODEL NUMBER _____
PRODUCT IDENTIFICATION NUMBER _____
ENGINE SERIAL NUMBER _____
MFD AXLE SERIAL NUMBER _____
CAB SERIAL NUMBER _____
ROPS SERIAL NUMBER _____

PREVIEW - YOUFIXTHIS.COM

Download full manual at youfixthis.com

2. ENGINE OIL PRESSURE LAMP - The engine oil pressure lamp will illuminate when the starter key is turned to the ACC or START positions and must stop illuminating when the engine starts to run. If the lamp keeps illuminating or illuminates at any time during operation, STOP THE ENGINE AND CHECK FOR THE CAUSE.

3. AIR FILTER LAMP - The air filter lamp will illuminate when there is a restriction in air flow during operation. STOP THE ENGINE THEN SERVICE THE AIR FILTER.

4. HEAD LAMP MAIN BEAM LAMP - The lamp will illuminate when the main beam of the head lamp is illuminated.

5. DIRECTION INDICATOR LAMPS - When the direction indicator switch is pushed to the left, the lamp on the left-hand side will operate. The right-hand lamp will operate when the switch is turned to the right.

6. TRAILER DIRECTION INDICATOR LAMPS - When a trailer is connected the lamp will operate when indicating a turn to the left or right.

IMPORTANT: *Use a soft cloth or air under low pressure to clean the instrument windows. Do not use rough material of any type which will scratch or damage the windows.*

PREVIEW - YOUFIXTHIS.COM

Download full manual at youfixthis.com

OPERATING PEDALS - Tractor With Cab

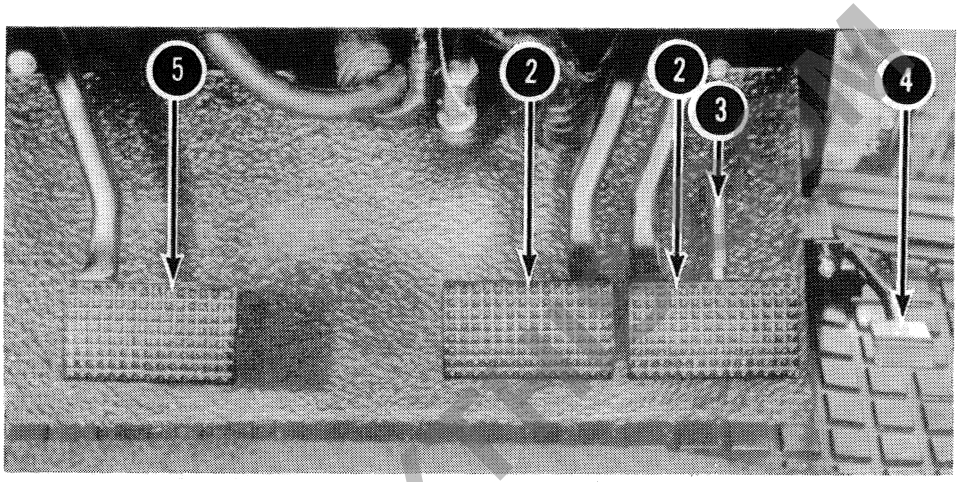

Figure 71

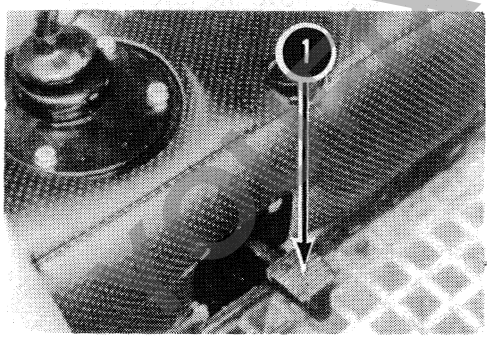

Figure 72

1. DIFFERENTIAL LOCK - Push the pedal down to engage the differential lock. A spring inside the differential lock will push it out of engagement when the pedal is released. If the differential lock does not disengage easily, push down on either brake pedal. If the tractor is stopped and the differential lock is engaged, reverse the tractor for a short distance to disengage. Use the differential lock to increase traction of one or both rear wheels.

IMPORTANT: *Do not try to engage the differential lock if both rear wheels are not turning at the same speed that is one wheel slipping. Always disengage the transmission clutch before engaging the differential lock.*

CAUTION: ***Do not drive on roads, or at high speed anywhere, with the differential lock engaged. Difficult steering will occur, and can result in an accident. In field operation, use the differential lock for traction improvement, but release for turning at row ends.***

PREVIEW - SAMPLE
Download full manual at youfixthis.com

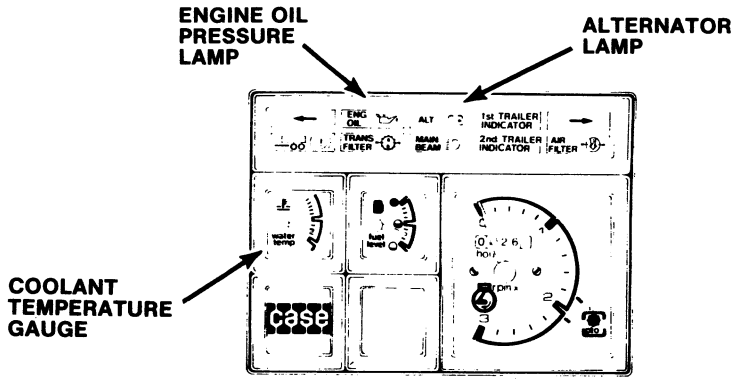

STEP 3

Turn the starter key one position clockwise to the ACC (accessories) position. Check that the engine oil pressure and alternator warning lamps are illuminated. Do not continue the starting procedure if either of the warning lamps are not illuminated. Check for the cause and repair the defect.

STEP 4

Do not do step 4 if the engine is warm.
Turn the starter key against the pressure of the spring inside the switch, to the HEAT position. This will energize the thermostart. Hold the key in this position for between 20 to 25 seconds.

STEP 5

Turn the starter key fully clockwise to the START position. Release the key when the engine starts. If the engine does not start within 30 seconds turn the starter key to the OFF position, wait for 30 seconds, then repeat the starting procedure from Step 4 .

DO NOT push the clutch pedal down when starting the engine.

NOTE: *There is a safety switch on the gearbox which will prevent the engine starting if the gear lever is not in the neutral position. If starting in very cold temperatures, move the throttle control to the maximum speed position.*

STEP 6

After the engine starts and is warm, check that the pointer of the coolant temperature gauge is in the green area and all warning lamps are not illuminated. If the gauge and warning lamps do not give normal indications, stop the engine and check for the cause.

PREVIEW - YOUFIXTHIS.COM

Download full manual at youfixthis.com

HITCH OPERATION

Telescoping Stabilizer Bars

1. Install the telescoping stabilizer bars to the lower links and the reduction housings as shown. Always use two bars, one each side.

2. Connect the implement to the linkage.

3. If necessary, lengthen one stabilizer bar by turning the adjusting sleeve counterclockwise until the implement can be moved to the correct position behind the tractor. Shorten the other stabilizer bar by turning the adjusting sleeve clockwise until all side movement of the implement is removed. Use a bar through the hole in the lug to make turning the sleeve easier.

NOTE: *The lengths of the stabilizer bars can be adjusted to permit up to 5 inches (12 cm) of offset of the implement, either side of center.*

IMPORTANT: *Always shorten the stabilizer bars so there is no side movement. This will put the bars in tension. The telescoping movement will permit the bars, or the implement to be removed from the tractor without changing the adjustment of the stabilizer bars.*

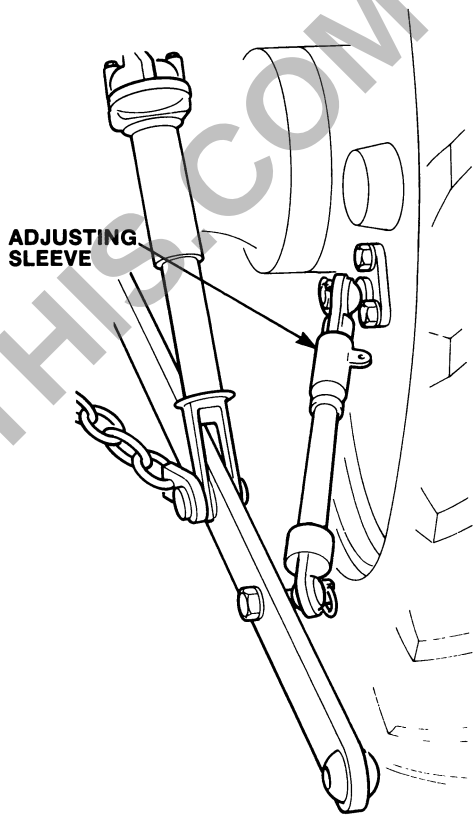

Figure 128

PREVIEW - YOUFIXTHIS.COM

Download full manual at youfixthis.com

TRACTOR BALLAST

Adding ballast to a tractor is an easy and efficient method of increasing traction in most conditions. When ballast is used, it is very important that the total weight of the tractor is not more than the maximum operating weight.

The three methods of ballast for your tractor is front frame weights, rear wheel weights and liquid ballast in the rear tires.
Front frame weights improve the steering characteristics when heavy hitch loads cause a movement of tractor weight from the front to the rear wheels.

Rear wheel weights and adding liquid to the rear tires increase traction by putting weight on to the driving wheels.

The ballast method of adding weight to a tractor where it is needed is the same for tractors with Mechanical Front Drive (MFD).

How And When To Use Ballast

Some implements cause a large amount of weight to move from the front of the tractor to the rear. In these conditions always add weights to the front of the tractor to keep correct balance.

The front weight assembly is made of a frame, a locking bar and a number of weights.

Add weight to the rear wheels to increase traction. Rear wheel weights can be fastened to the outside of the rear wheels.

If you need to add weight by putting liquid in the rear tires, see your dealer for the special procedure and caution that must be followed. The liquid used for ballast is a mixture of water and calcium chloride. If the air temperature is below 0° C (32° F) add a calcium chloride antifreeze.

NOTE: *Never completely fill the tires with liquid.*

WARNING: ***Always add calcium chloride to water. NEVER add water to calcium chloride. If you do, there will be a violent reaction. When correctly mixed, the liquid will increase in temperature. Allow the liquid to cool before adding to the tire. See your authorized dealer for details.***

Always remove the ballast when it is not needed. Do not add too much weight to try to pull very heavy loads. Remember that the power used to move a tractor that has too much weight will decrease the power available to pull the implement.

PREVIEW - YOUFIXTHIS.COM

Download full manual at youfixthis.com

PREVIEW ONLY

You're viewing 12 of 215 pages

The full manual includes:

- All 215 pages, complete
- Searchable PDF (find any keyword)
- No watermarks
- Instant download
- Print-ready quality

GET FULL MANUAL NOW

Case 1394 Operator Manual

Scan or click anywhere
youfixthis.com

Click anywhere on this page to get the full manual