# Section 11

# GENERAL ENGINE SPECIFICATIONS
# 1740 UNI-LOADER

**THE MODEL AND ENGINE SERIAL NUMBER IS STAMPED ON A PLATE LOCATED ON THE SIDE OF THE ENGINE ABOVE THE CRANKING MOTOR.**

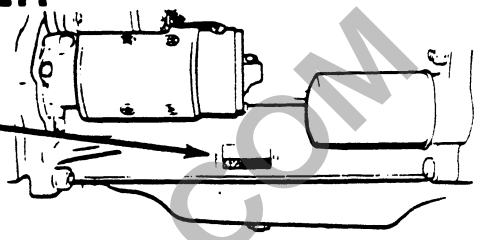

## DIESEL ENGINES

### General

| | |
|---|---|
| Type | Case Open Chamber, 4 Cylinder, 4 Stroke Cycle, Valve-in-Head |
| Firing Order | 1-3-4-2 |
| Bore | 3-13/16 Inches |
| Stroke | 4-1/8 Inches |
| Piston Displacement | 188 Cubic Inches |
| Compression Ratio | 17.5 to 1 |
| No Load Governed Speed | 2150 RPM |
| Rated Engine Speed | 2000 RPM |
| Engine Idling Speed | 950 to 1000 RPM |
| *Valve Tappet Clearance (Exhaust) | (Hot and Cold) .014 Inch |
| (Intake) | (Hot and Cold) .014 Inch |

*Hot Settings Are Made After the Engine Has Operated At Thermostat Controlled Temperature For At Least Fifteen Minutes.

### Piston and Connecting Rods

| | |
|---|---|
| Rings per Piston | 3 |
| Number of Compression Rings | 2 |
| Number of Oil Rings | 1 |
| Type Pins | Full Floating Type |
| Type Bearing | Replaceable Precision, Steel Back, Copper-Lead Alloy Liners |

### Main Bearings

| | |
|---|---|
| Number of Bearings | 5 |
| Type Bearings | Replaceable Precision Steel Back, Copper-Lead Alloy Liners |

### Engine Lubricating System

| | |
|---|---|
| Crankcase Capacity | 4 Quarts |
| With Filter Change | 5 Quarts |
| Oil Pressure | 50 to 70 Pounds with Engine Warm and Operating at Rated Engine Speed |
| Type System | Pressure and Spray Circulation |
| Oil Pump | Gear Type |
| Oil Filter | Full Flow Spin on Type |

### Fuel System

| | |
|---|---|
| Fuel Injection Pump | Roosa-Master |
| Pump Timing | 2 Degrees Before Top Dead Center |
| Fuel Injectors (Prior to Eng. SN 2734508) | Pencil Type (Opening Pressure 2800 PSI) |
| Fuel Injectors (Starting with Engine SN 2734509) | Pencil Type (Opening Pressure 3200 PSI) |
| Fuel Transfer Pump | Vane Type, Integral Part of Injection Pump |
| Governor | Variable Speed, Fly-Weight Centrifugal Type, Integral Part of Injection Pump |
| 1st Stage Fuel Filter (Prior to Eng. SN 2718490) | Replaceable Element Type |
| 2nd Stage Fuel Filter (Prior to Eng. SN 2718490) | Replaceable Element Type |
| 1st Stage Fuel Filter (Starting with Eng. SN 2718490) | Spin on Type |
| 2nd Stage Fuel Filter (Starting with Eng. SN 2718490) | Spin on Type |



PREVIEW - YOUFIXTHIS.COM
Download full manual at youfixthis.com

## MAINTENANCE CHART

| INTERVAL | TYPE OF SERVICE | FLUIDS/LUBRICANTS | INSTRUCTIONS |
|---|---|---|---|
| Run-In Every 2 Hours | Check wheel bolt torque until stable (85-100 ft. lbs.) | | |
| Run-In First 15 Hours | Replace hydraulic oil filter. | | Section 41 |
| Run-In First 20 Hours | Change engine oil and replace engine oil filter. | See Chart, Page 4 | |
| Every 10 Hours Or Daily | Grease loader pivot points.<br>Clean air cleaner dust cup.<br>Check engine oil level.<br>Check radiator coolant level.<br>Grease attachment pivot points. | See Chart, Page 4<br><br>See Chart, Page 4<br><br>See Chart, Page 4 | Section 24 |
| Every 20 Hours | Grease variable speed pulleys. (Three strokes each fitting.) | See Chart, Page 4 | |
| Every 50 Hours | Check and adjust drive chains (See NOTE).<br>Check battery electrolyte level.<br>Check hydraulic oil level.<br>Check tire pressure. | <br>Distilled water.<br>Case TCH Fluid. | Section 61<br>Section 82<br>Section 41 |
| Every 100 Hours | Change engine oil. | See Chart, Page 4 | |
| Every 200 Hours | Change engine oil filter.<br>Check gear box oil level.<br>Grease universal joints.<br>Check brake master cylinder fluid level.<br>Drain water from diesel fuel filter.<br>Drain water from carburetor.<br>Grease distributor fitting. | <br>See Chart, Page 4<br>See Chart, Page 4<br><br>See Chart, Page 4<br><br><br>See Chart, Page 4 (one stroke) | <br>Section 61 |

**NOTE:** Adjust every 25 hours when operating under severe working conditions.

PREVIEW - YOUFIXTHIS.COM



Download full manual at youfixthis.com

## ENGINE REMOVAL

1. Drain the cooling system--radiator and block. Disconnect the battery ground cable at the battery.

2. Remove the muffler, rear counterweight and the radiator shroud.

3. Remove the fan belt and remove fan assembly. Disconnect hoses at radiator and remove radiator.

4. Remove the air intake tube between the air cleaner and carburetor or air intake manifold.

5. On diesel engines, disconnect the throttle linkage and fuel shut off cable at the injection pump. Disconnect the fuel return line at the injection pump and the fuel supply line at the fuel filter. Secure the loose end of the fuel lines as high as possible to prevent draining the fuel tanks.

6. On gasoline engines, disconnect the choke cable at the carburetor and the throttle linkage where it joins the governor linkage at the front of the engine. Remove fuel line clamp at starter and disconnect the fuel line at the fuel pump. Secure the fuel line as high as possible to prevent draining the fuel tanks.

7. Unplug wiring harness at plugs at rear of instrument panel. Disconnect the battery cable at the starter.

8. Disconnect the universal joint coupling at the flywheel.

9. Remove the nut, lockwasher, flat washer and pad from the four motor mount studs.

10. Attach a lifting sling to the engine. Attach a chain hoist to lifting sling and remove engine.

## ENGINE INSTALLATION

The engine is installed in the reverse order of removal.

Before installing the starter on the engine, disassemble the starter and inspect brushes, starter drive, bearings, etc. and repair or replace as required. Also lubricate the starter. Refer to Section 82.

Refer to wiring diagram in Section 82 for proper connections.

When the engine has been installed, service all filters and install coolant and engine oil as specified in Section 13.

PREVIEW - YOUFIXTHIS.COM



Download full manual at youfixthis.com

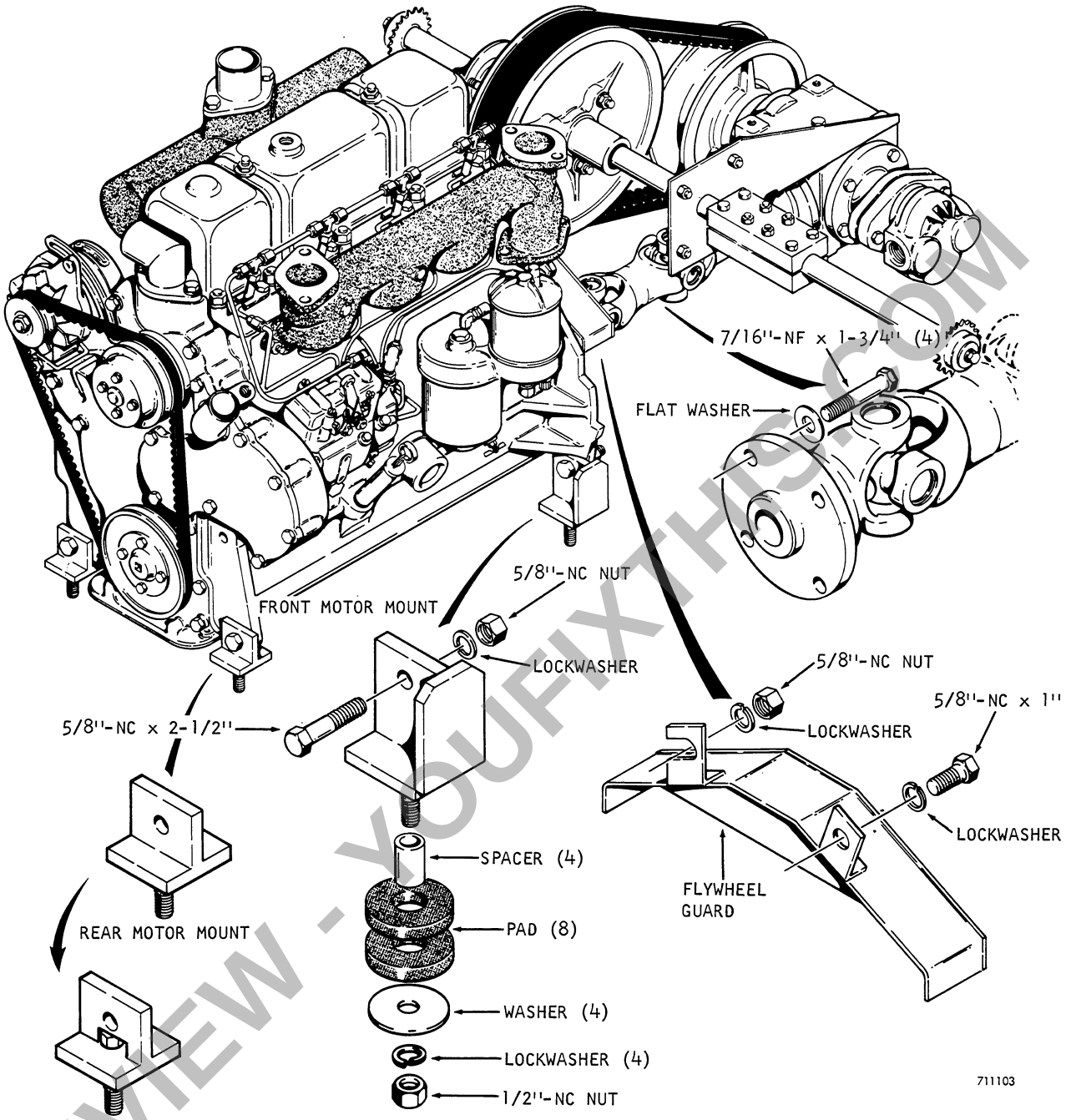


Figure 1 - Engine Installation

PREVIEW - YOUFIXTHIS.COM



Download full manual at youfixthis.com

## GENERAL TORQUE SPECIFICATION TABLE (Revised 7-72)

### USE THE FOLLOWING TORQUES WHEN SPECIAL TORQUES ARE NOT GIVEN

**NOTE:** These values apply to fasteners as received from supplier, dry, or when lubricated with normal engine oil. They do not apply if special graphited or moly-disulphide greases or other extreme pressure lubricants are used. This applies to both UNF and UNC threads.

| SAE Grade No. | | 5 | | | | 8 ★ | | | |
|---|---|---|---|---|---|---|---|---|---|
| Bolt head identification marks as per grade NOTE: Manufacturing Marks Will Vary | |  | | | |  | | | |
| Bolt Size | | Torque | | | | Torque | | | |
| | | Foot Pounds | | Meter Kilograms | | Foot Pounds | | Meter Kilograms | |
| Inches | Millimeters | Min. | Max. | Min. | Max. | Min. | Max. | Min. | Max. |
| 1/4 | 6.35 | 9 | 11 | 1.2 | 1.5 | 12 | 15 | 1.7 | 2.1 |
| 5/16 | 7.94 | 17 | 20.5 | 2.4 | 2.8 | 24 | 29 | 2.3 | 4.0 |
| 3/8 | 9.53 | 35 | 42 | 4.8 | 5.8 | 45 | 54 | 6.2 | 7.5 |
| 7/16 | 11.11 | 54 | 64 | 7.5 | 8.9 | 70 | 84 | 9.7 | 11.6 |
| 1/2 | 12.70 | 80 | 96 | 11.1 | 13.3 | 110 | 132 | 15.2 | 18.3 |
| 9/16 | 14.29 | 110 | 132 | 15.2 | 18.3 | 160 | 192 | 22.1 | 26.6 |
| 5/8 | 15.88 | 150 | 180 | 20.7 | 24.9 | 220 | 264 | 30.4 | 36.5 |
| 3/4 | 19.05 | 270 | 324 | 37.3 | 44.8 | 380 | 456 | 52.6 | 63.1 |
| 7/8 | 22.23 | 400 | 480 | 55.3 | 66.4 | 600 | 720 | 83.0 | 99.6 |
| 1 | 25.40 | 580 | 696 | 80.2 | 96.3 | 900 | 1080 | 124.5 | 149.4 |
| 1-1/8 | 25.58 | 800 | 880 | 110.6 | 121.7 | 1280 | 1440 | 177.0 | 199.2 |
| 1-1/4 | 31.75 | 1120 | 1240 | 154.9 | 171.5 | 1820 | 2000 | 251.7 | 276.6 |
| 1-3/8 | 34.93 | 1460 | 1680 | 201.9 | 232.3 | 2380 | 2720 | 329.2 | 376.2 |
| 1-1/2 | 38.10 | 1940 | 2200 | 268.3 | 304.3 | 3160 | 3560 | 437.0 | 492.3 |

★ Thick nuts must be used with Grade 8 bolts

## Special Torques

ENGINE BLOCK

Camshaft nut ..... 80 to 90 Ft. lbs.
Connecting rod nuts ..... 45 to 55 Ft. lbs.
Crankshaft nut ..... 125 to 135 Ft. lbs.
Flywheel to crankshaft bolt ..... 65 to 70 Ft. lbs.
Main bearing cap bolts ..... 90 to 100 Ft. lbs.
Oil pan capscrews (Stamped steel) ..... 10 to 12 Ft. lbs.
Oil pan capscrews (Cast iron) ..... 24 to 28 Ft. lbs.
Oil pan to seal retainer ..... 15 to 20 Ft. lbs.
Oil pan drain plug w/nylon gasket ..... 29 to 30 Ft. lbs.
Oil pump cover capscrews ..... 6 to 8 Ft. lbs.
Oil seal retainer bolts (Grade 8 bolts) ..... 12 to 15 Ft. lbs.
Fuel pump drive gear nut (Diesel) ..... 40 to 50 Ft. lbs.
Timing gear housing (Aluminum Front Cover) ..... 25 to 30 Ft. lbs.

PREVIEW - YOUFIXTHIS.COM

Download full manual at youfixthis.com

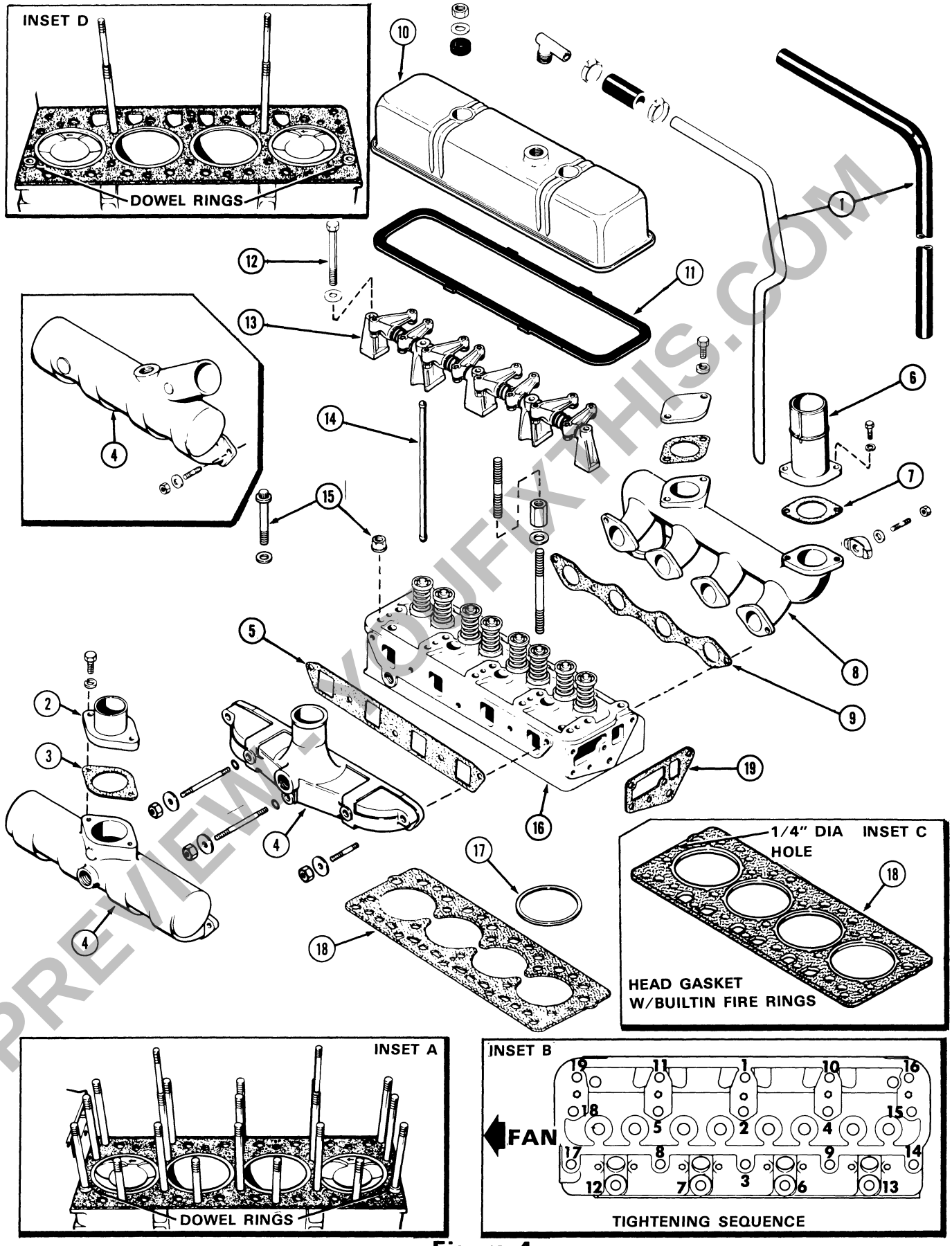


**Figure 4**

PREVIEW - YOUFIXTHIS.COM

Download full manual at youfixthis.com

# CYLINDER HEAD ASSEMBLY (Continued)

## 188 AND 201

## (Refer to Figure 11)

### Disassembly

1. Using a valve spring compressor, compress the spring (1) enough to remove the valve retainer locks (2). Release the spring compressor and remove the intake valve seal (3) intake valve retainers (4) and the exhaust valve rotators (5). Remove the springs (1) and valve spring seats (6).

2. Remove any carbon from the valve stems before they are removed from the cylinder head. Remove the intake valves (8) and the exhaust valves (7) from the cylinder head (9) and set them in a rack or holder. **NOTE:** Mark the valves on removal so they can be installed in their original location.

3. Remove the intake valve guides (10) and the exhaust valve guides (11) by driving them down through the cylinder head (9) using an arbor.

4. Remove the exhaust valve seats (12) from the cylinder head (9) using a special seat removing tool, Inset B. **NOTE:** Never attempt to remove a valve seat with a center punch, cold chisel or pry bar.

5. To remove the expansion plug (13) from the cylinder head (9) it must be drilled and pryed out.

**NOTE:** Refer to Inspection and Servicing on Pages 22,23, 24 and 25 prior to assembly.

### Assembly

1. If the valve guides are being replaced, install new valve guides (10 & 11) into the cylinder head using an arbor. Press the guides into the head from the top of the cylinder head. The guides must protrude above the cylinder head (intake and exhaust) 1.000″, Inset A. After the guides have been pressed into place, they must be reamed to .3422″-.3432″, Inset A.

2. To install new exhaust valve seats (12), clean the recess in the cylinder head (9). Place the valve seats in dry ice to shrink them. Insert the valve seats in the head and press them in place, using a suitable press.

3. Lubricate the intake valves (8) and exhaust valves (7) with clean engine oil and install them in their original location.

4. Install the valve spring seats (6), valve springs (1) with closed coil end toward head, and the valve retainers (4) on the intake valves (8). Compress the valve spring so the intake valve seals (3) can be installed in the lower groove on the valve stems. Install the valve retainer locks (2) and remove the spring compressor carefully.

5. Install the valve spring seats (6), valve springs (1) and the exhaust valve rotators (5) on the exhaust valves (7). Compress the valve springs so that the valve retainer locks (2) can be installed. Remove the spring compressor carefully.

6. Install new expansion plug (13) if it was removed. The plug must be pressed in place and firmly seated against the retainer ridge in the cylinder head.

**NOTE:** When engine assembly is complete, a check of the operation of the rotators must be made. It is impossible to determine whether or not the rotator is turning without an identifying mark.

Place a dab of white paint on each of the rotators and note it's position. Start the engine and observe whether or not the rotator is turning. DO NOT attempt repairs on rotators.

There is not a set speed at which the rotators should turn. Some rotators will turn faster than others. As long as the rotator is turning the valve, it is functioning properly.

PREVIEW - YOUFIXTHIS.COM

Download full manual at youfixthis.com

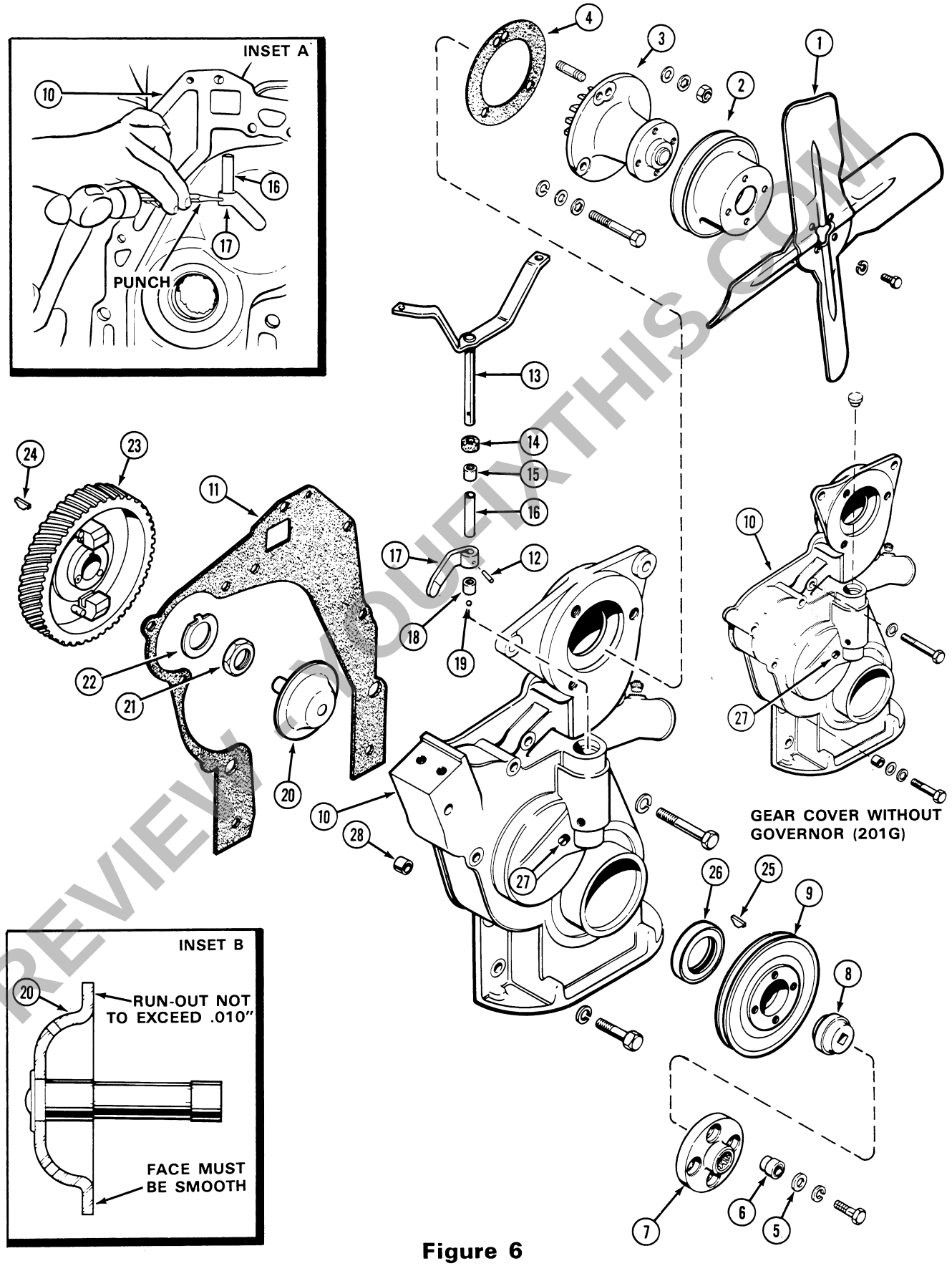


**Figure 6**

PREVIEW - YOUFIXTHIS.COM

Download full manual at youfixthis.com

# GENERAL ENGINE SPECIFICATION
# 1737 UNI-LOADER
## SPARK IGNITION ENGINES

### General

| | |
|---|---|
| Type | 4 Cylinder, 4 Stroke Cycle, Valve-in-Head |
| Firing Order | 1-3-4-2 |
| Bore | 3-3/8 Inches |
| Stroke | 4-1/8 Inches |
| Compression Ratio | 7.1 to 1 |
| Piston Displacement | 148 Cubic Inches |
| No Load Governed Speed | 2150 RPM |
| Rated Engine Speed | 2000 RPM |
| Engine Idling Speed | 950 to 1000 RPM |
| *Valve Tappet Clearance (Intake) | (Hot and Cold) .014 Inches |
| (Exhaust) | (Hot) .014 Inches |
| | (Cold) .020 Inches |
| Exhaust Valve Rotators | Positive Type |

*Hot Settings Are Made After The Engine Has Operated At Thermostat Controlled Temperature For At Least Fifteen Minutes.

### Piston and Connecting Rods

| | |
|---|---|
| Rings per Piston | 4 |
| Number of Compression Rings | 3 |
| Number of Oil Rings | 1 |
| Type Pin | Full Floating Type |
| Type Bearings | Replaceable, Precision Steel Back, Copper Lead Alloy Liners. |

### Main Bearings

| | |
|---|---|
| Number of Bearings | 3 |
| Type Bearings | Replaceable, Precision Steel Back, Copper Lead Alloy Liners |

### Engine Lubricating System

| | |
|---|---|
| Crankcase Capacity | 4 Quarts |
| With Filter Change | 5 Quarts |
| Oil Pressure | 24 to 32 Pounds with Engine Warm and Operating at Rated Engine Speed |
| Type System | Pressure Spray Circulation |
| Oil Pump | Gear Type |
| Oil Filter | Full Flow, Spin on Type |

### Fuel System

| | |
|---|---|
| Carburetor | Marvel-Schebler TSX Series |

### Distributor Ignition

| | |
|---|---|
| Contact Point Gap | .020 Inch |
| Dwell Angle | 42° |
| Spark Plugs | Prestolite 18 8 |
| Plug Gap | .025 Inch |
| Thread | 18 MM |
| Shank Length | 1/2 Inch |

### Engine Timing

| | |
|---|---|
| Static Timing | 6° BTDC |
| Running Timing | 40° BTDC at Rated Engine Speed |

PREVIEW - YOUFIXTHIS.COM

Download full manual at youfixthis.com

| INTERVAL | TYPE OF SERVICE | FLUIDS/LUBRICANTS | INSTRUCTIONS |
|---|---|---|---|
| Every 500 Hours | Change hydraulic oil.<br>Replace hydraulic oil filter.<br>Check alternator drive belt tension and condition.<br>Replace diesel fuel filters.<br>Clean hydraulic reservoir breathers.<br>Check fan belt condition. | Case TCH Fluid. | Section 41<br>Section 41<br><br>Section 82<br><br><br>Section 41 |
| Every 1000 Hours | Drain water from fuel tanks. | | |
| Every 2000 Hours | Change gear box oil.<br>Clean and refill cooling system.<br>Replace gasoline engine fuel filter. | See Chart, Page 4 | Section 61 |
| As Required | Clean or replace air cleaner element.<br>Replace hydraulic oil filter.<br>Check wheel bolts torque when replacing wheels.<br>Adjust clutches when lever travel exceeds 6" from neutral (forward or reverse).<br>Adjustment may be made sooner if operator's comfort is affected. | | Section 24<br>Section 41<br><br><br><br><br>Section 61 |

PREVIEW - YOUFIXTHIS.COM



Download full manual at youfixthis.com

# CYLINDER HEAD AND COMPONENTS

## 148 AND 159

## (Refer to Figure 4)

## Disassembly

Remove the muffler and hood from the vehicle. Steam clean the entire engine area where service works is to be performed. Disconnect and remove the air cleaner system.

1. Drain the cooling system. **CAUTION:** If the engine is hot, do not remove the radiator cap until the coolant has had sufficient time to cool. Loosen the cap to the first stop carefully to relieve any excess pressure before removing it completely.

2. Remove the hose from the the thermostat housing (1). Remove the thermostat housing (1) and gasket (2). Discard the gasket. **NOTE;** If the thermostat is to be serviced, refer to Section 23.

3. Disconnect the linkage and fuel lines from the carburetor (3). Remove the carburetor assembly (3) and gasket (4). Discard the gasket. Disconnect the high tension wires from the spark plugs and remove the spark plugs (5) and gaskets (6).

4. Remove the bolts that connect the intake manifold (7) to the exhaust manifold (8). Remove the intake manifold (7) and exhaust manifold (8). Remove manifold gasket (9) and discard.

5. Remove the valve cover (10), gasket (11) and breather tube (12). Discard the gasket.

6. Remove the rocker arm bracket bolts (13) and the stud nuts (14). Remove the rocker arm assembly (19). See Page 14 and 15 for servicing of the rocker arm assembly.

7. Remove the push rods (15) and tag them so they can be installed in their proper location when reassembling.

8. Remove the cylinder head stud nuts (16) and the cylinder head (17). Remove the cylinder head gasket (18) and discard the gasket.

## Inspection

1. Replace all gaskets and worn or defective parts.

2. Clean the top surface of the cylinder block and sleeve flange carefully. The top of the pistons may be cleaned with a power driven wire brush. **NOTE:** The pistons must be at top dead center when being cleaned. All traces of carbon and other deposits must be removed. During cleaning, the use of a clean lint free cloth dampened in solvent is recommended.

3. Clean all bolt and stud threads.

4. Clean and inspect the cylinder heads thoroughly. If evidence of fretting or erosion exists or if the head is warped more than .006", the head must be resurfaced or replaced.

5. Inspect the push rods for straightness, cracked or worn ends. Replace if necessary.

6. Clean the valve cover and flush out the breather tube.

7. Clean and check the spark plugs. If replacement is required, regap the spark plugs to .025 setting.

PREVIEW - YOUFIXTHIS.COM

Download full manual at youfixthis.com

**NOTE:** CROSSBAR BRACKETS INSTALLED AS FOLLOWS:
D54960 AND D54961 ON INSIDE OF CROSSBAR
D56045 AND D56044 ON INSIDE OF CROSSBAR

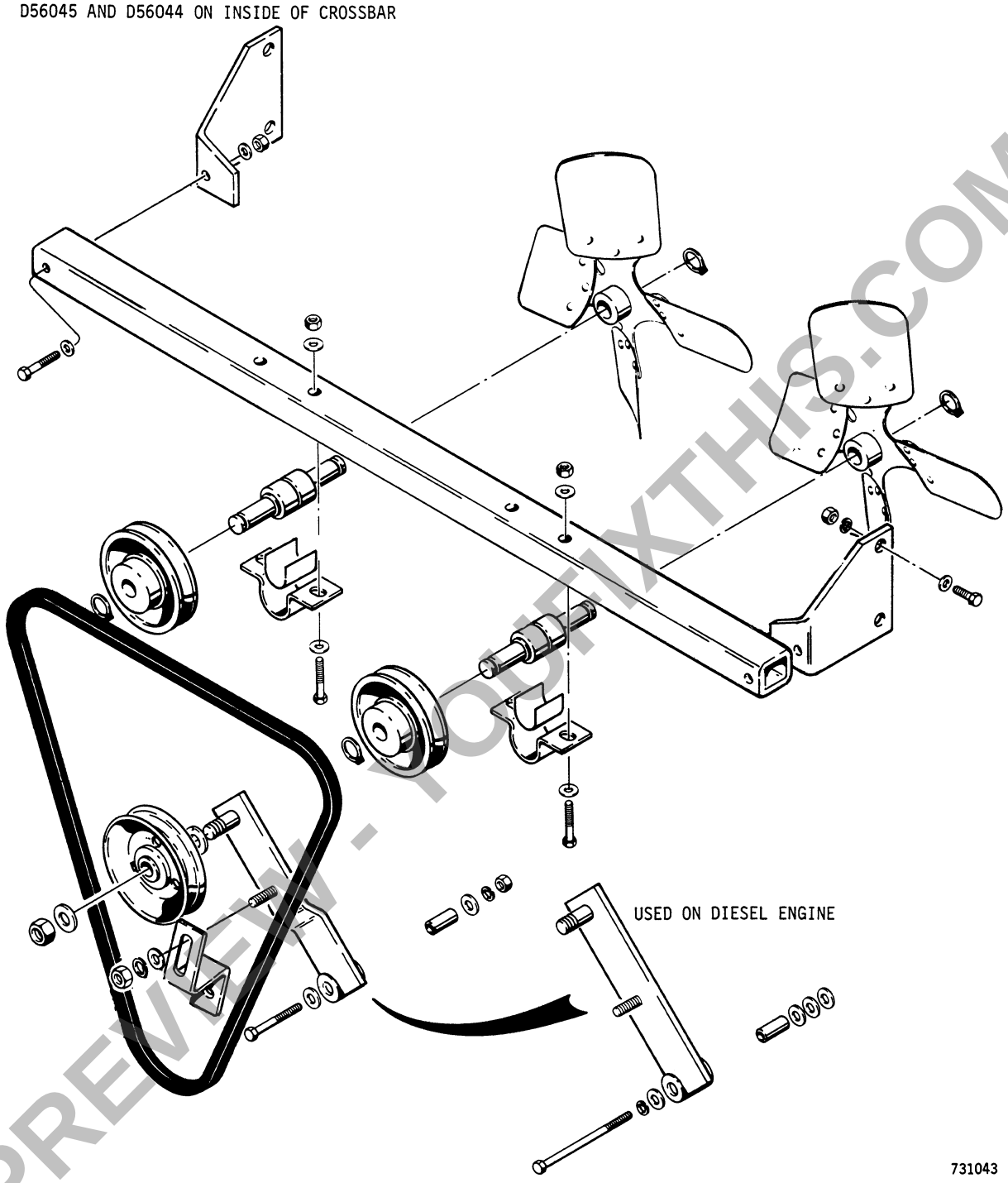


PREVIEW - YOUFIXTHIS.COM

Figure 2 - Fan Installation, Late Production



Download full manual at youfixthis.com

## Special Torques (Continued)

CYLINDER HEAD AND VALVES

| | |
|---|---|
| Cylinder head flanged nuts | 90 to 100 ft. lb |
| Cylinder head stud nuts w/hardened washers | 95 to 105 ft. lb |
| Cylinder head grade 8 bolts | 110 to 115 ft. lb |
| Intake and exhaust manifold stud nuts | 25 to 30 ft. lb |
| Rocker arm bracket stud nuts and bolts | 25 to 30 ft. lb |
| Valve cover stud nuts | 5 to 8 ft. lb |
| Water pump stud nuts | 20 to 25 ft. lb |
| Spark plugs | 32 to 35 ft. lb |

FUEL SYSTEM

| | |
|---|---|
| Injector leak off tube nuts | 35 to 45 in. lb |
| Fuel injector pressure adjusting screw locknut | 70 to 75 in. lb |
| Fuel injector clamp capscrews | 18 to 22 ft. lb |
| High pressure fuel line banjo connection screws | 35 ft. lb |
| Fuel inlet filter assembly (Diesel) | 20 ft. lb |
| Injection tube nuts | 18 to 22 ft. lb |

STEERING

| | |
|---|---|
| Control Valve end cap retaining bolts | 14 to 17 ft. lb |
| Hand pump body bolts | 18 to 22 ft. lb |
| Power steering pump cover bolts | 9 to 11 ft. lb |
| Relief valve locknut | 18 to 20 ft. lb |
| Relief valve cartridge | 10 to 12 ft. lb |
| Cylinder end plate retaining screws | 5 to 7 ft. lb |
| Piston rod locknut | 30 to 35 ft. lb |

POWER TRAIN (Shuttle Tractors)

| | |
|---|---|
| Front cover or dual range housing nuts | 35 to 40 ft. lb |
| Axle housing bolts | 150 to 180 ft. lb |
| Differential brake housing bolts | 70 to 90 ft. lb |
| Countershaft locking bolts | 35 to 40 ft. lb |
| Transmission case to torque tube bolts | 80 to 132 ft. lb |
| Transmission case to torque tube stud nuts | 110 to 132 ft. lb |
| Reverse idler gear stud nuts | 130 to 145 ft. lb |

POWER TRAIN (Hydrostatic Tractors)

| | |
|---|---|
| Banjo fitting bolt on hydrostatic pump | 14 to 16 ft. lb |
| Servo mounting bolts | 18 to 21 ft. lb |
| Hydrostatic pump bracket to housing bolts | 35 to 42 ft. lb |
| Hydrostatic pump mounting bolts | 80 to 90 ft. lb |
| Hydrostatic motor mounting bolts | 80 to 96 ft. lb |

PREVIEW - YOUFIXTHIS.COM

Download full manual at youfixthis.com

# CYLINDER HEAD AND COMPONENTS (Continued)

## Inspection

Replace all gaskets, seals and worn or defective parts.

1. Clean the top surface of the block and sleeve flange carefully. All traces of carbon and other deposits must be removed. During cleaning, the use of a rag dampened in solvent is recommended.

2. Using extreme care not to scratch surfaces. Remove any small burrs in the areas to be measured so accurate readings can be obtained.

3. Sleeve protrusion must be checked to determine which fire ring is used, Figure 5. If protrusion exceeds .005" the sleeve(s) must be replaced. Make sure the correct fire ring is used. **NOTE:** Only the standard size fire ring or the gasket with built-in fire ring is included in the valve grind gasket kit. However, a thicker fire ring is available if the protrusion chart indicates a need for it. The thicker fire ring can be identified by a black marking stripe. Either a magnetic base dial indicator or a depth micrometer can be used to determine the cylinder sleeve protrusion as indicated in Figure 6. Measure cylinder sleeve protrusion at points A,B,C, and D. Using ball (A28312), clamping bar (A40682) and plate (OTC 970-7), clamp the cylinder sleeve in place, Figure 6. **NOTE:** The plate OTC 970-7 is available through local Owatonna Tool dealers or the Owatonna Tool Co., Owatonna, Minnesota. Torque the hold down capscrews to 50 ft. lbs.

4. Clean and inspect the cylinder head thoroughly. If evidence of fretting or erosion exists in the area of fire-ring contact or if the head is warped more than .006", the head must be resurfaced or replaced.

5. Inspect push rods for straightness, cracked or worn ends. Replace if necessary.

6. Clean all bolt and stud threads.

7. Clean the rocker arm cover and discard the old gasket.

8. Replace all hoses if cracks and deterioration is found. Replace hose clamps to assure a tight connection.

| CYLINDER SLEEVE PROTRUSION | USE STANDARD FIRE RINGS | USE OVERSIZE (THICKNESS) FIRE RINGS |
|---|---|---|
| MORE THAN .003"* | X | |
| .001" - .003"* | X | |
| LESS THAN .001"* | | X |

**Figure 5**

*If sleeve protrusion varies more than .003" around circumference or exceeds .005", change that sleeve and check again. If sleeve shows severe erosion, replace the sleeve. **NOTE:** Cylinder head warpage should not exceed .006" (maximum) measuring from end to end.

PREVIEW - YOUFIXTHIS.COM

Download full manual at youfixthis.com

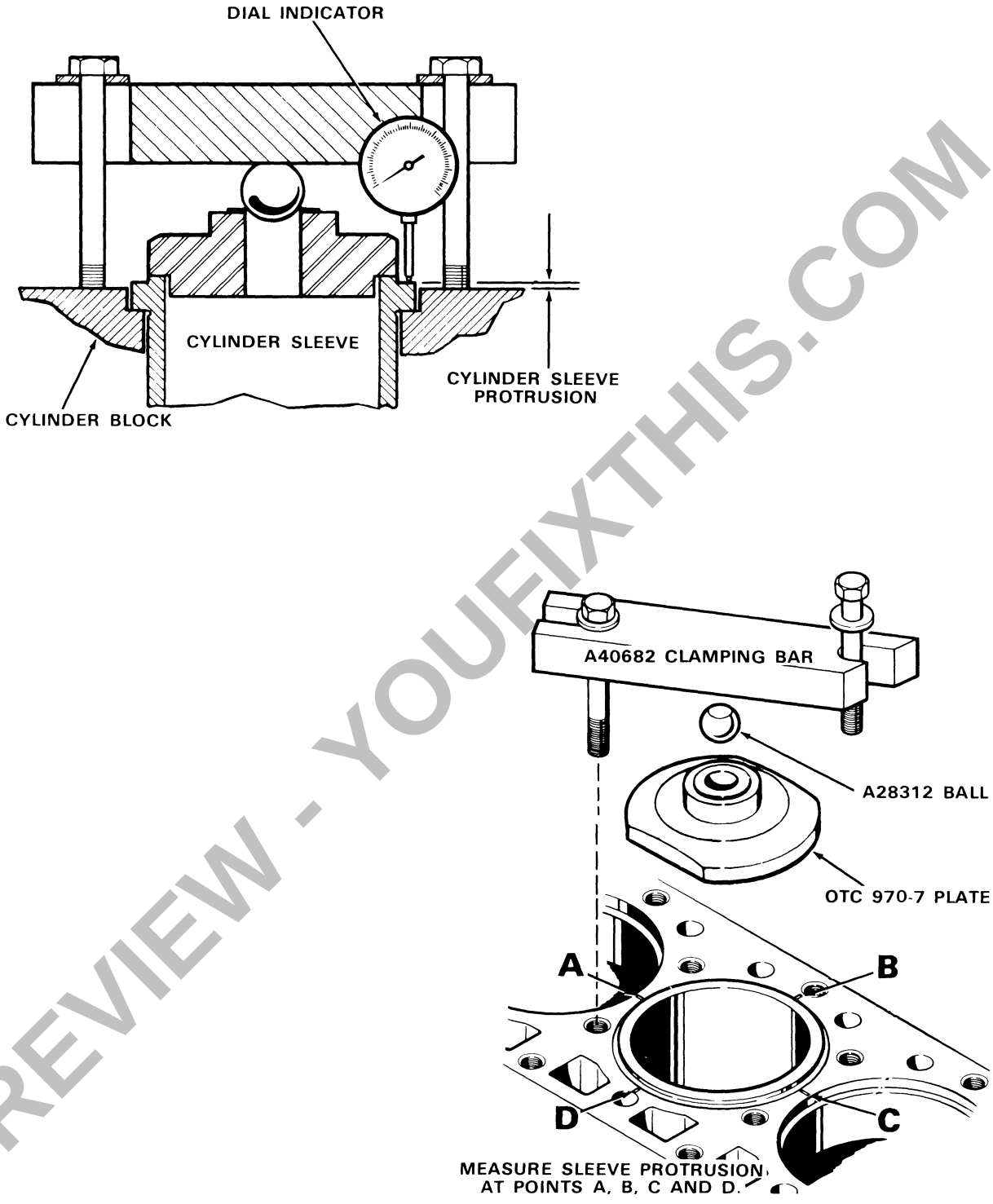


**Figure 6**

PREVIEW - YOUFIXTHIS.COM

Download full manual at youfixthis.com

# TIMING GEAR COVER, GEAR AND WATER PUMP

## (Refer to Figure 7)

## Assembly

1. Install key (24) to camshaft and press on camshaft gear (23). Install the lip washer (22) and nut (21). Torque the nut 80 to 90 ft. lbs. Using a dial indicator, check the backlash between the camshaft gear and crankshaft gear. If the backlash is more than .006", the gear may have to be replaced. Excessive backlash between gears can also be caused by worn camshaft bushings.

2. Install the governor shaft (20) to the governor weights on the camshaft gear (23).

3. Press a new oil seal (26) into the timing gear cover to the depth shown in, Inset A.

4. Press needle bearings (18) and (15) into the timing gear cover (Pressing on numbered side of bearing only) as shown in, Inset B.

5. Install the dust seal (14). Coat the I.D. of the seal with Lubriplate or equivalent. Install the thrust ball (19), governor lever (17), thrust spacer (16) governor lever (13). Align the holes in the levers (17) and (13) and install pin (12). Install the pipe plug (27). Lubricate the I.D. of oil seal (26) with Lubriplate or equivalent.

6. Apply Permatex or equivalent to both sides of gasket (11). Install the assembled timing gear cover (10) with new gasket (11) to engine block with locating ring dowels (28) and bolts. Torque the retaining bolts 35 to 42 ft. lbs.

7. Install key (25) to the crankshaft and press on crankshaft pulley (9). Install nut (8) and torque 125 to 135 ft. lbs.

8. Install flexible coupling (7) (if equipped), bushings (6) and washers and bolts (5). Torque bolts 54 to 64 ft. lbs.

9. Apply Permatex or equivalent to both sides of gasket (4). Install water pump (3) with gasket (4) and torque retaining bolts and nuts 35 to 42 ft. lbs.

10. Install fan pulley (2) and fan (1) to water pump and torque retaining bolts 35 to 42 ft. lbs.

PREVIEW - YOUFIXTHIS.COM

Download full manual at youfixthis.com

# Engine Block

**NOTE:** All dimensions are given in inches. Specifications apply to all engines unless noted.

| | | Maximum Limit Including Wear |
|---|---|---|
| **CYLINDER SLEEVES** | | |
| I.D. of sleeve (159G) | 3.5013 to 3.5028 | .005 |
| (188D) | 3.8115 to 3.8125 | .005 |
| (188G) | 3.8130 to 3.8145 | .005 |
| (148G) | 3.3745 to 3.3765 | .005 |
| Sleeve out-of-round | | .004 |
| Clearance to bottom of piston skirt (188D) | .0035 to .0055 | |
| (188G) | .0025 to .0055 | |
| (159G) | .0015 to .0045 | |
| (148G) | .001 to .003 | |
| Taper | | .001 |
| **PISTON** | | |
| Type | Cam Ground | |
| Material | Aluminum Alloy | |
| O.D. at bottom of skirt: $90^0$ to piston pin (188G) | 3.8090 to 3.8105 | |
| (188D) | 3.8070 to 3.8080 | |
| (159G) | 3.4983 to 3.4998 | |
| (148G) | 3.373 to 3.3750 | |
| I.D. of piston pin bore (188D) | 1.2500 to 1.2503 | .001 |
| (188G, 159G) | .9992 to .9994 | .001 |
| (148G) | .8592 to .8594 | .001 |
| Width of 1st ring groove (188D) | Keystone Type | |
| (188G, 159G, 148G) | .0965 to .0975 | |
| Width of 2nd ring groove (188D) | .097 to .098 | |
| (148G, 159G, 188G) | .0955 to .0965 | |
| Width of 3rd ring groove (188D) | .1885 to .1895 | |
| (188G, 159G, 148G) | .0955 to .0965 | |
| Width of 4th ring groove (188G, 159G, 148B) | .250 to .251 | |
| **PISTON RINGS** | | |
| No. 1 Compression (188D) | Chrome Grooved Keystone | |
| (188G, 159, 148G) | Chrome Tapered Face | |
| Width (188D) | Not Measureable | |
| (188G, 159G, 148G) | .0930 to .0935 | |

PREVIEW - YOUFIXTHIS.COM

Download full manual at youfixthis.com

# LUBRICANTS AND FLUIDS CHART

| ITEM | CAPACITIES U. S. | CAPACITIES METRIC | RECOMMENDATIONS |
|---|---|---|---|
| Model 1737<br>Engine crankcase oil<br>with filter change | 5 qt. | 4,7 liters | Use engine oil meeting the following specifications:<br><br>SD Service Class D (MS) |
| without filter change | 4 qt. | 3,8 liters | 40° F. (4° C) and above . . . . . SAE 30<br>32° F. (0° C) to 90° F. (32° C). . . . . SAE 20W<br>-10° F. (-23° C) to 60° F. (16° C) . . . SAE 10W<br><br>-10° F. (-23° C) and above. . . . . SAE 10W-30<br>60° F. (16° C) and below . . . . . SAE 5W-20 |
| Model 1740<br>Engine crankcase oil<br>with filter change | 5 qt. | 4,7 liters | Use engine oil meeting the following specifications:<br><br>CD Service Class D (DS, Series 3) |
| without filter change | 4 qt. | 3,8 liters | 32° F. (0° C) and above . . . . . SAE 30<br>10° F. (-12° C) to 50° F. (10° C) . . . . SAE 20W<br>32° F. (0° C) and below. . . . . SAE 10W |
| Gear box | 1-1/2 pt. | 0,7 liters | Multipurpose gear lubricant<br>SAE 90 EP - Case Part No. B53983<br>API - GL-4 with low foaming additive. |
| Hydraulic reservoir refill capacity | 14 gal. | 53 liters | Case TCH Fluid.<br>**NOTE:** If not available, use automatic transmission fluid type "A", suffix "A". |
| Total hydraulic system capacity (approximate) | 19 gal. | 72 liters | |
| Fuel tanks (combined) | 17 gal. | 64 liters | |
| Grease fittings | As required | | Above 32° F. (0° C) use Multipurpose or No. 2 lithium-soap base grease.<br><br>Below 32° F. (0° C) use Multipurpose or No. 1 lithium-soap base grease. |
| Brake master cylinder | As required | | SAE J1703 brake fluid. |

PREVIEW - YOUFIXTHIS.COM



Download full manual at youfixthis.com

# PREVIEW ONLY

You're viewing 18 of 443 pages

## The full manual includes:

- All 443 pages, complete
- Searchable PDF (find any keyword)
- No watermarks
- Instant download
- Print-ready quality

GET FULL MANUAL NOW

**Case 1700, 1737, 1740, 1700 UNI-LOADER, 1740 UNI-LOADER, 1737 UNI-LOADER Service Manual**

**Scan or click anywhere**
**youfixthis.com**

*Click anywhere on this page to get the full manual*