SHOP MANUAL

J. I. CASE

SERIES 200B-300-300B-350-400B-500B-600B

Tractor serial number is stamped on dash name plate.

Engine serial number is stamped on side of cylinder block.

BUILT IN THESE VERSIONS

GASOLINE	LOW COST	LP-GAS	DIESEL	
210B, 310, 310B, 350, 410B, 510B, 610B	310, 310B	310, 310B, 410B, 510B, 610B	300, 300B	Utility, non-adjustable front axle
310B, 410B	310B	310B, 410B	300B	Utility, adjustable front axle
211B, 311, 311B, 312, 312B, 351, 411B, 511B, 611B	311, 311B, 312, 312B	311, 311B, 312, 312B, 411B, 511B, 611B	301, 301B, 302, 302B	General purpose dual wheel tricycle
211B, 311, 311B, 312B, 351, 411B, 511B, 611B	311, 311B, 312B	311, 311B, 312B, 411B, 511B, 611B	301, 301B, 302B	General purpose adjustable front axle
312, 312B, 351, 511B, 611B	312, 312B	312, 312B, 511B, 611B	302, 302B	General purpose single wheel tricycle

INDEX (By Starting Paragraph)

	200B	300 Non-Diesel	300 Diesel	300B Non-Diesel	300B Diesel	350	400B	500B	600B
BELT PULLEY	112	112	112	112	112	112	112A	112	112A
BRAKES	110	110	110	110	110	110	110	110	110
CARBURETOR (Not LP-Gas)	45	45	.....	45	.....	45	45	45	45
"CASE-O-MATIC"									
Clutch	.....	.....	.....	.....	.....	.....	94M	.....	94M
Clutch Pressure Regulator	.....	.....	.....	.....	.....	.....	94L	.....	94L
Control Valve	.....	.....	.....	.....	.....	.....	94L	.....	94L
Convertor Pressure Regulator	.....	.....	.....	.....	.....	.....	94K	.....	94K
Fluid, Breather & Filter	.....	.....	.....	.....	.....	.....	94B	.....	94B
Linkage Adjustments	.....	.....	.....	.....	.....	.....	94C	.....	94C
Operation	.....	.....	.....	.....	.....	.....	94	.....	94
Pressure Tests	.....	.....	.....	.....	.....	.....	94D	.....	94D
Pump	.....	.....	.....	.....	.....	.....	94H	.....	94H
Torque Convertor	.....	.....	.....	.....	.....	.....	94P	.....	94P
Trouble Shooting	.....	.....	.....	.....	.....	.....	94A	.....	94A

PREVIEW - YOUFIXTHIS.COM

Download full manual at youfixthis.com

SERVICE DATA

Tractor Series **GENERAL**	200B	300 & 300B Non-Diesel	300 & 300B Diesel	350	400B	500B	600B
Engine Make	Own	Own	Continental	Own	Own	Own	Own
Engine Model	G126	G148	GD157	G164	G148	G164	G164
Cylinders, Number of	4	4	4	4	4	4	4
Bore — Inches	3 1/8	3 3/8	3 3/8	3 9/16	3 3/8	3 9/16	3 9/16
Stroke — Inches	4 1/8	4 1/8	4 3/8	4 1/8	4 1/8	4 1/8	4 1/8
Displacement—Cubic Inches	126.5	148	157	164	148	164	164
Compression Ratio—Gas & Diesel	7.5:1	7.25:1	15.5:1	7.25:1	7.25:1	7.25:1	7.25:1
Compression Ratio—LP-Gas or High Altitude	....	8.5:1	....	8.5:1	8.5:1	8.5:1	8.5:1
Pistons Removed From	Above	Above	Above	Above	Above	Above	Above
Main Bearings, Number of	3	3	3	3	3	3	3
Main & Rod Bearings Adjustable	No	No	No	No	No	No	No
Cylinder Sleeves—Type	Wet	Wet	Wet	Dry	Wet	Dry	Dry
Forward Speeds	4, 8 or 12	4, 8 or 12	4, 8 or 12	4, 8 or 12	4 or 8	4, 8 or 12	4 or 8
Generator & Starter Make	Auto-Lite	Auto-Lite	Auto-Lite	Auto-Lite	Auto-Lite	Auto-Lite	Auto-Lite
Ignition Magneto	Case 41	Case 41	....	Case 41	Case 41	Case 41	Case 41
Battery Terminal Grounded	Positive	Positive	Positive	Positive	Positive	Positive	Positive

TUNE-UP

Firing Order	1-3-4-2	1-3-4-2	1-3-4-2	1-3-4-2	1-3-4-2	1-3-4-2	1-3-4-2
Valve Tappet Gap	0.014C	0.014C	0.014H	0.014C	0.014C	0.014C	0.014C
Inlet Valve Face Angle	30°	30°	44°	30°	30°	30°	30°
Inlet Valve Seat Angle	30°	30°	45°	30°	30°	30°	30°
Exhaust Valve Face Angle	45°	45°	44°	45°	45°	45°	45°
Exhaust Valve Seat Angle	45°	45°	45°	45°	45°	45°	45°
Distributor Breaker Gap	0.020	0.020	....	0.020	0.020	0.020	0.020
Magneto Breaker Gap	0.010	0.010	....	0.010	0.010	0.010	0.010
Ignition Timing	See Paragraph 82 or 83						
Injection Timing	....	....	26° BTC	....	....	....	....
Plug Electrode Gap	0.025	0.025	....	0.025	0.025	0.025	0.025
Carburetor Make, Gas or Low Cost	M-S	M-S	...	M-S	M-S	Zenith	M-S
Carburetor Make, LP-Gas	....	**	....	....	Ensign	Ensign	Ensign
Engine Loaded RPM	1900	***	1750	1900	2000	2000	2250
Engine High Idle, No Load RPM	2050	#	1950	2050	2125	2125	2400
PTO RPM, No Load	624	##	593	572	584	588	658
PTO RPM @ Engine Loaded RPM	533*	533*	533	530	541†	533††	541†

SIZES—CAPACITIES—CLEARANCES

(Clearances in Thousandths)							
Crankshaft Journal Diameter	2.2495	2.2495	2.3745	2.6235	2.2495	2.6235	2.6235
Crankpin Diameter	1.937	1.937	2.062	2.061	1.937	2.061	2.061
Camshaft Journal Diameter—Front	1.7495	1.7495	1.809	1.7495	1.7495	1.7495	1.7495
Camshaft Journal Diameter—Center	1.7495	1.7495	1.746	1.7495	1.7495	1.7495	1.7495
Camshaft Journal Diameter—Rear	1.7495	1.7495	1.68375	1.7495	1.7495	1.7495	1.7495
Piston Pin Diameter	0.8592	0.8592	1.1251	0.99905	0.8592	0.99905	0.99905
Valve Stem Diameter—Intake	0.341	0.341	0.341	0.341	0.341	0.341	0.341
Valve Stem Diameter—Exhaust	0.3386	0.3386	0.3386	0.3386	0.3386	0.3386	0.3386
Main Bearings Running Clearance	1.5-2.0	1.5-2.0	0.9-3.6	1.5-2.0	1.5-2.0	1.5-2.0	1.5-2.0
Crankshaft End Play	3-5	3-5	4-6	3-7	3-5	3-7	3-7
Camshaft End Play	3-7	3-7	3-7	3-7	3-7	3-7	3-7
Rod Bearings Running Clearance	1.5-2.0	1.5-2.0	0.6-3.1	1.5-2.0	1.5-2.0	1.5-2.0	1.5-2.0
Piston Skirt Clearance	See Paragraphs 27 and 28						
Camshaft Bearings Diameter Clearance	2-4	2-4	3-4	2-4	2-4	2-4	2-4
Cooling System—Gallons	3.0	3.0	3.0	3.0	3.0	3.0	3.0
Crankcase Oil—Quarts, with Filter	5.0	5.0	6.0	5.0	5.0	5.0	5.0
Transmission—Quarts							
Utility	17	17	17	44	17	44	44
General Purpose	28	28	28	44	28	44	44
Torque Tube—Quarts							
4-Speed	14	14	14	14	16	14	16
8 or 12-Speed	12	12	12	12	16	12	16

TIGHTENING TORQUES—Ft.-Lbs.

Cylinder Head	60-65	60-65	70-75	95-100	60-65	95-100	95-100
Connecting Rods	45-50	45-50	35-40	45-50	45-50	45-50	45-50
Main Bearings	90-100	90-100	85-95	90-100	90-100	90-100	90-100

*At 1750 engine rpm.
**Marvel-Schebler on 300; Ensign on 300B.
***1750 on 300; 1900 on 300B.
#1875 on 300; 2050 on 300B.
##572 on 300; 624 on 300B.
†At 1970 engine rpm.
††At 1925 engine rpm.

PREVIEW - YOUFIXTHIS.COM

YouFixThis.com

Download full manual at youfixthis.com



Fig. C758 — Steering wormshaft and housing assembly removed from front support. Upper end of lever shaft is supported in bushing (B) on all models except 302, 302B, 312, 312B, 351, 511B and 611B.

lever (50 or 50A—Fig. C755) with respect to the lever shaft (spindle) and remove the lever. Remove front wheels and bearing adjusting nut (51). Withdraw the steering spindle. The need and procedure for further disassembly is evident. Install oil seals (46 and 55) with lips facing upward. Tighten the bearing adjusting nut (51) to remove all spindle end play without causing any binding tendency. After adjustment is complete, lock the nut in position with tab washer (52). Renew the steering lever (50 or 50A) if any of the studs are worn or damaged.

7K. On models 302, 302B, 312, 312B, 351, 511B and 611B, mark the relative position of lever (50—Fig. C755A) with respect to the lever shaft (upper spindle) and remove the lever. Raise front of tractor and withdraw spindle (47). When reassembling, install seal (46) with lip facing upward. Renew lever (50), if any of the studs are worn or damaged.

7L. Before installing the wormshaft housing on all models, back-off the mesh adjusting set screw (41—Fig. C755, C755A or C756) to insure full seating of housing. On models 302, 302B, 312, 312B, 351, 511B and 611B, adjust the spindle end play as in paragraph 7C. On all models, adjust the stud mesh as outlined in paragraph 7E.

POWER STEERING SYSTEM

The power steering attachment for gasoline utility models is of the linkage booster type and is powered by either an Eaton belt driven pump with a separately mounted reservoir or a Barnes gear driven pump with an integral reservoir. The power steering attachment for gasoline and LPG general purpose tractors uses the same Barnes pump as the utility tractors and a Char-Lynn booster motor is incorporated in the steering linkage.

Note: The maintenance of absolute cleanliness of all parts is of utmost importance in the operation and servicing of the hydraulic power steering system. Of equal importance is the avoidance of nicks and burrs on any of the working parts.

LUBRICATION AND BLEEDING

8. The J. I Case Company specifies that only Automatic Transmission Fluid Type A should be used in the power steering system. On systems using a belt driven pump, fluid level should be maintained at full mark on reservoir dip stick. On systems with

POWER STEERING SYSTEM TROUBLE SHOOTING CHART

	Loss of Power Assistance	Power Assistance In One Direction Only	Unequal Turning Radius	Erratic Steering Control	Fluid Foaming Out of Reservoir
Binding, worn or bent mechanical linkage	★		★	★	
Insufficient fluid in reservoir	★				
Faulty pump drive belt	★			★	
Low pump pressure	★				
Internal leakage in booster motor	★				
Sticking or binding valve spool	★	★		★	
Improperly positioned steering shaft	★	★			
Damaged or restricted hose or tubing	★	★			★
Pump to valve hose lines reversed	★				
Wrong fluid in system	★			★	★
Improperly adjusted tie rods			★	★	
Faulty steering lever timing			★		
Air in system				★	★
Faulty flow control valve in pump				★	
Plugged filter element					★
Internal leak in valve					★
Faulty cylinder	★			★	

PREVIEW - YOUFIXTHIS.COM

YouFixThis.com

Download full manual at youfixthis.com

stopped, it proves a leak in the inlet valve. Normal pressure is 3½-5 psi.

SYMPTOM. Cold regulator shows moisture and frost after standing.

CAUSE AND CORRECTION. Trouble is due either to leaking valves, or the valve levers are not properly set. For information on setting of valve lever, refer to paragraph 51H.

51H. **REGULATOR OVERHAUL.** Remove the unit from the engine and completely disassemble, using Fig. C788G as a reference. Thoroughly wash all parts and blow out all passages with compressed air. Inspect each part carefully and discard any which are worn.

Before reassembling the unit, note dimension (X—Fig. C788F) which is measured from the face on the high pressure side of the casting to the inside of the groove in the valve lever when valve is held firmly shut as shown in Fig. C778H. If dimension (X) which can be measured with Ensign gage No. 8276 as shown in Fig. C788H or with a depth rule is more or less than ½-inch, bend the lever until this setting is obtained.

The casting (C — Fig. C788J) is marked with an arrow to assist in setting the low pressure valve lever. Be sure to center the lever on the arrow before tightening the screws which retain the valve block. The top of the lever should be flush with the top of the two posts (P).

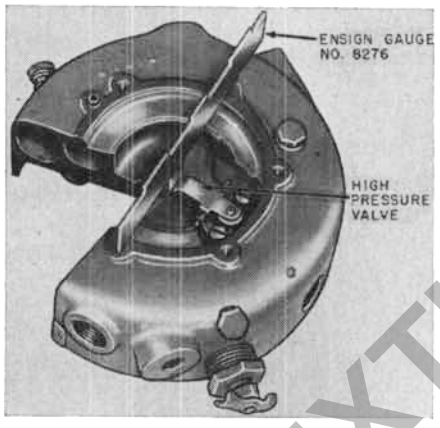

Fig. C788H — Using Ensign gage 8276 to set the fuel inlet valve lever to the dimension as indicated at "X" in Fig. C788F.

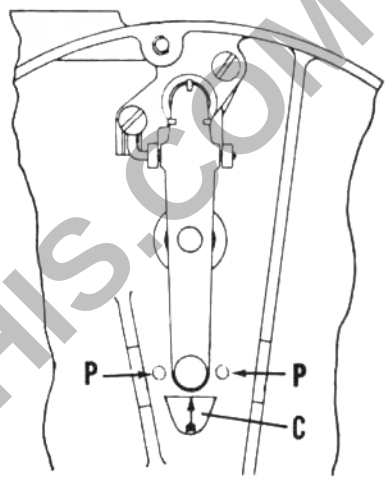

Fig. C788J — Location of posts (P) and arrow (C) for the purpose of setting the fuel inlet valve lever.

CARBURETOR

Series 300B-400B-500B-600B

51J. With the fuel tank withdrawal valves closed, the procedure for removing and overhauling the carburetor is conventional.

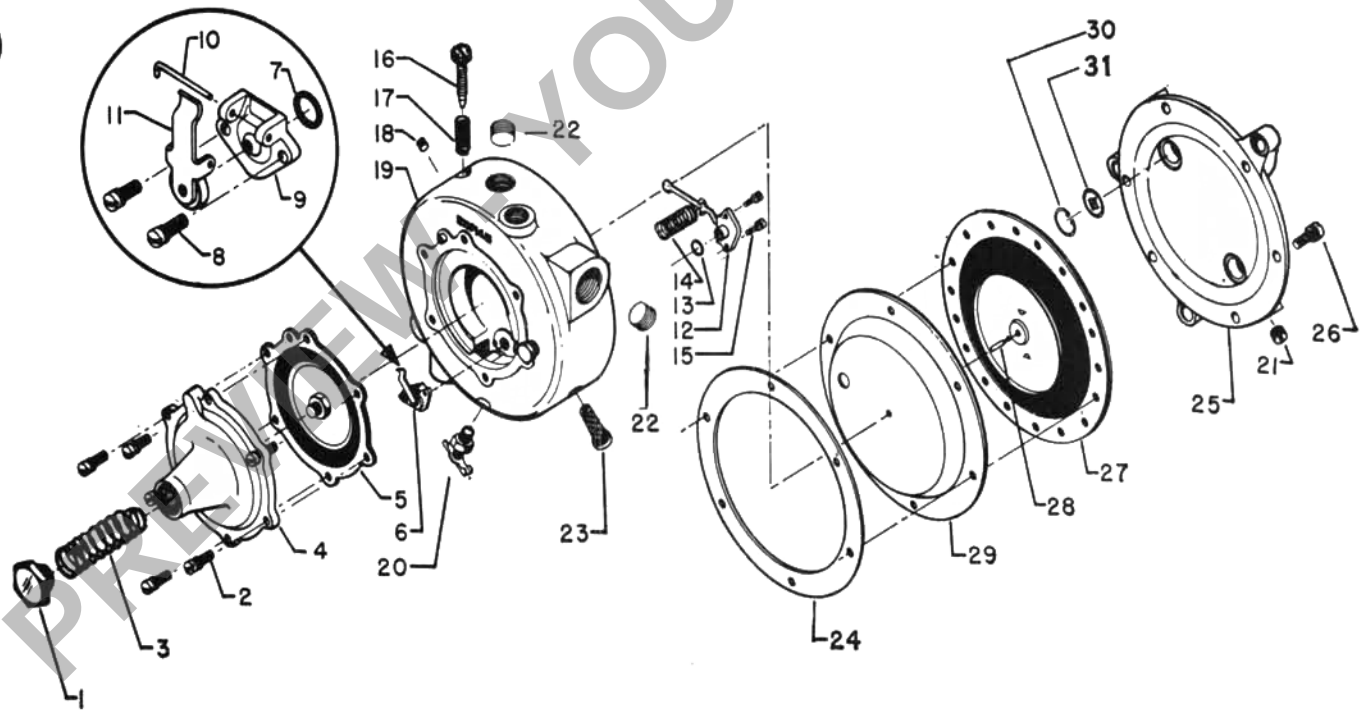

Fig. C788G—Exploded view of the Ensign Model W LP-Gas regulator.

1. Spring retainer
3. Inlet diaphragm spring
4. Regulator cover
5. Inlet pressure diaphragm
6. Inlet valve assembly
7. "O" ring
9. Valve seat
10. Pivot pin
11. Inlet diaphragm lever
12. Outlet valve assembly
13. "O" ring
14. Outlet diaphragm spring
16. Idle adjusting screw
17. Idle screw spring
18. Bleed screw
19. Regulator body
20. Drain cock
23. Strainer
24. Partition plate
25. Back cover plate
27. Outlet pressure diaphragm
28. Push pin
29. Partition plate
30. Retainer (snap) ring
31. Compensator

PREVIEW ONLY YOUFIXTHIS.COM

YouFixThis.com

Download full manual at youfixthis.com

MAIN CLUTCH

Series 400B-600B

94M. **R&R PLATES.** To remove the main clutch plates, Fig. C818M, first remove the torque convertor unit as outlined in paragraph 94P. Remove the two jack screws shown in Fig. C818N, extract the clutch plate retaining snap ring (Fig. C818M) and lift clutch plates from the convertor unit. Inspect the clutch plates in the conventional manner and renew any damaged or worn parts.

When reassembling, first make certain that the pto drive shaft is installed in the convertor unit so that clutch plates will be properly centered. Then, install clutch plates and snap ring. Using a spare clutch drum, align the clutch plates and install the two jack screws shown in Fig. C818N. Tighten the jack screws enough to prevent clutch plates from becoming misaligned when convertor is installed in torque tube; then, lift-off the spare clutch drum.

94N. **R&R CLUTCH DRUM.** To remove the clutch drum (Fig. C818M), first remove the torque convertor unit as outlined in paragraph 94P. Turn the drum until the three holes in same align with the three cap screws which retain the bearing retainer to wall in torque tube. Remove the three cap screws and withdraw the drum and bearing unit straight forward and out of torque tube. The need and procedure for further disassembly is evident.

TORQUE CONVERTOR UNIT

Series 400B-600B

The torque convertor unit includes the single stage torque convertor, the single disc direct drive clutch, the "Case-O-Matic" and hydraulic system pump drive gear and the multiple disc main clutch. The main clutch is the only section of the convertor unit which has the individual parts catalogued by the J. I. Case Co. If any part of the torque convertor unit, other than the main clutch, is malfunctioning, the complete convertor unit must be renewed.

94P. **REMOVE AND REINSTALL.** To remove the torque convertor unit, first detach (split) engine from torque tube (convertor housing) as outlined in paragraph 94Q. Remove battery and battery mounting tray. Disconnect the speedometer cable, tachometer cable at adapter housing, the "Case-O-Matic" heat indicator sending unit and oil line from the torque convertor pressure regulator valve housing and pressure gage oil line at "T" fitting. Disconnect any interferring linkage, then unbolt and remove the steering support, instrument panel and attached units from torque tube.

Disconnect the hydraulic lift system oil lines and control rods. Remove cap screws around perimeter and one Allen screw near the center of the adapter housing and using a hoist and lifting eye, lift the complete adapter housing assembly straight up and out of torque tube as shown in Fig. C818H. Use care during this operation not to distort the pump suction tubes. Working through opening in top of torque tube, install two $\frac{5}{16}$x1½-inch jack screws as shown in Fig. C818N, and tighten the screws enough to prevent clutch plates from becoming misaligned when convertor is removed. Attach Case special loading tool to convertor and working through opening in top of torque tube, remove cap screws retaining convertor hub to torque tube. Pull torque convertor unit straight forward and remove same from torque tube as shown in Fig. C818P.

Before installing the convertor unit, refer to Fig. C818M and make certain that pto drive shaft is properly installed in the convertor unit and that the bronze thrust washer is positioned in hub of clutch drum. A small amount of gun grease will facilitate holding the thrust washer in place.

Slide convertor unit straight into torque tube, align oil passages in convertor hub with those in torque tube and slide unit into place. Tighten the convertor hub bolts to a torque of 20 ft.-lbs. and remove the two clutch plate jack screws. Be sure to renew the rubber gasket between convertor and flywheel before joining the tractor halves.



Fig. C818P — Using special Case loading tool to remove torque convertor unit from torque tube.

TRACTOR SPLIT (ENGINE FROM TORQUE TUBE)

Series 400B-600B

94Q. To detach (split) engine from torque tube (convertor housing), first drain cooling system and torque tube and remove hood.

Remove both of the frame side rails, uncouple steering shaft at one of the universal joints and unbolt the steering shaft intermediate support bracket. Support both halves of tractor separately and on axle type tractors, unbolt the radius rod pivot bracket from torque tube.

Disconnect fuel line and fuel gage wire and remove throttle rod and fuel tank. On models with underneath muffler, disconnect exhaust pipe from manifold. Disconnect wiring harness from generator and starting motor and remove starting motor. Disconnect the oil pressure gage line from cylinder block and heat indicator sending unit from cylinder head. Disconnect wire

PREVIEW - YOUFIXTHIS.COM

Download full manual at youfixthis.com

53. **FUEL TANK.** Fuel tank of any Diesel engine using "cracked" type fuels should be cleaned periodically to remove gum and varnish deposits. These deposits can be removed using a 50-50 mixture of denatured, uncolored alcohol and benzol.

54. **FIRST STAGE FILTER.** Every fifty hours or more often in extreme conditions, clean dirt from exterior of filter, close the fuel shut-off valve and open drain valve on filter. Remove the filter body, unscrew filter nut and remove the brass edge-type filter. Clean element in clean diesel fuel and blow dry. Do not use linty rags for cleaning. Gum or varnish deposits can be removed by soaking in a suitable solvent. After assembly, bleed the system as in paragraph 52.

55. **SECOND STAGE FILTER.** The cartridge or inner element of this filter must be discarded every 500 hours or more often in extreme conditions. The procedure for renewing the element is evident. After assembly, bleed the system as in paragraph 52.

56. **FINAL STAGE FILTER.** This sealed type filter should be discarded and a new one installed every 2000 hours or more often in extreme conditions. The procedure for renewing the filter is evident. After assembly, bleed the system as in paragraph 52.

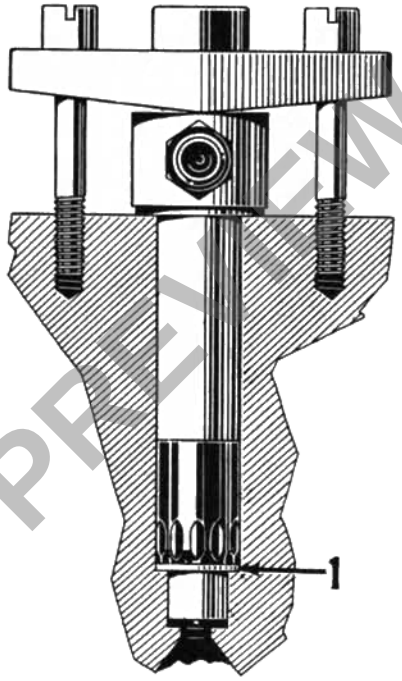

Fig. C791 — Sectional view showing typical injection nozzle installation. Whenever the nozzle has been removed, always renew the copper gasket (1).

DIESEL (INJECTORS) NOZZLES

Users of the I&T SHOP SERVICE are warned to play safe when servicing the fuel injectors.

When testing or adjusting fuel injectors, do not place any part of your body in front of the injector nozzle. Fuel spray from an injector has sufficient penetrating power to puncture the flesh and destroy tissue. Should the fuel enter the blood stream it may cause blood poisoning.

In the event the skin is punctured from the discharge, immediately wash the injured part with boric acid solution, support the injured member with a splint and sling and get the patient to a physician as soon as possible.

57. **LOCATING FAULTY INJECTOR.** If one engine cylinder is misfiring, it is reasonable to suspect a malfunctioning injector in that cylinder. As in shorting out spark plugs in a spark ignition engine, the faulty injector is the one which, when its feed line is loosened (to deprive it of fuel), least affects the running of the engine. Remove the suspected injector from the engine as outlined in paragraph 58.

To check the diagnosis, install a new or rebuilt injector or one from a cylinder which is firing regularly. If the cylinder fires regularly with the other injector, the condemned unit should be serviced as per paragraphs 59 through 62.

It is recommended that whenever an injector is suspected of being faulty that the mating energy cell (pre-combustion chamber) be also removed and serviced as outlined in paragraph 73.

58. **R&R INJECTOR.** Before loosening any lines, wash the connections and adjacent parts with fuel oil or kerosene. After disconnecting the high pressure and leak off lines, cap the exposed lines and fittings with plastic plugs to prevent the entrance of dirt. Remove injector retaining screws and withdraw the injector using a pry bar with a right angle claw if necessary. Remove the solid copper gasket.

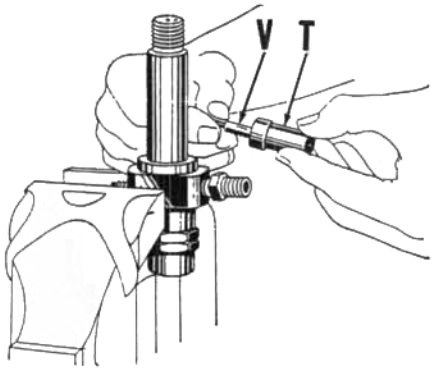

Fig. C793 — Removing spray nozzle tip (T) and valve (V).

Thoroughly clean the injector recess in the cylinder head before reinserting injector. Make certain that the old copper gasket (1—Fig. C791) has been removed (it may have stuck in the head recess seat). Install a new gasket and carefully insert the injector using care not to strike the nozzle tip against any hard surface. Torque the clamping nuts to 14-16 foot-pounds.

59. **CLEANING & INSPECTING INJECTORS.** Hard or sharp tools, emery cloth, crocus cloth, grinding compounds or abrasives of any kind should NEVER be used in the cleaning of injectors.

Injectors which do not check O.K. on the test stand or by visual testing, should be disassembled, inspected and cleaned as follows: Carefully clamp injector in a soft jawed vise and remove nozzle cap nut. Remove spray nozzle unit consisting of the valve (V—Fig. C793) and the tip (T). If valve cannot be readily withdrawn from tip with the fingers, soak the assembly in acetone, carbon tetrachloride or equivalent until parts are free.

The nozzle valve and body (tip) are a mated (non-interchangeable) unit and should be handled accordingly. Neither part is available separately.

All surfaces of the nozzle valve should be mirror bright except the contact line of the beveled seating surface. Polish the valve with mutton tallow used on a soft cloth or felt pad. The valve may be held by its stem in a revolving chuck during this operation. A piece of soft wood soaked in oil, or a brass wire brush will be helpful in removing carbon from the valve.

If valve shows any dull spots on the sliding surfaces, or if a magnifying glass inspection shows any nicks, scratches or etchings, discard the valve and the nozzle body; or, send them to an authorized station for possible overhaul.

The inside of the nozzle tip (body) can be cleaned by forming a piece of soft oil soaked wood to a taper of the same angle as the valve seat in the

PREVIEW - YOUFIXTHIS.COM

YouFixThis.com

Download full manual at youfixthis.com

Valve seat inserts can be removed by using a suitable puller. Chill new inserts in dry ice before pressing them into position and make certain that seat bottoms in counterbore. Maximum allowable seat run-out is 0.002.

Valve tappet gap is 0.014 cold.

Diesel Models

13. Intake and exhaust valves are not interchangeable and the intake valves seat directly in cylinder head with a face angle of 44 degrees and a seat angle of 45 degrees. Exhaust valves seat on renewable seat inserts with a face angle of 44 degrees and a seat angle of 45 degrees. Desired width of the intake and exhaust valve seats is $\frac{1}{16}$-$\frac{3}{32}$-inch. Seats can be narrowed, using 15 and 70 degree stones. Valve stem diameter is 0.3406-0.3414 for the intake, 0.3382-0.3390 for the exhaust.

Exhaust valve seat inserts can be removed by using a suitable puller. Chill new inserts in dry ice before pressing them into position and make certain that seat bottoms in counterbore. Maximum allowable seat run-out is 0.002.

Valve tappet gap is 0.014 hot.

VALVE GUIDES AND SPRINGS

Non-Diesel Models

14. Intake and exhaust valve guides should be pressed out from bottom of head so they emerge at top of head. On the 300, press new guides into top of cylinder head until top of guide protrudes $\frac{11}{32}$-inch above spring counterbore as shown in Fig. C760. On the 200B, 300B, 350, 400B, 500B and 600B, refer to Fig. C760A and press new guides into top of head until guide protrusion above the spring seat counterbore is $\frac{11}{32}$-inch for the exhaust, $1\frac{1}{32}$ inches for the intake. Ream the guides after installation to an inside diameter of 0.3422-0.3432. This provides a normal stem to guide clearance of 0.0008-0.0026 for the intake, 0.0032-0.0050 for the exhaust.

14A. Intake and exhaust valve springs are not interchangeable. Approximate valve spring free length is $2\frac{3}{8}$ inches for the intake, $2\frac{3}{16}$ inches for the exhaust. Renew any spring which is rusted, discolored or does not meet the following pressure test specifications:

Intake Valve Spring

Pounds test @ $1\frac{1}{2}$ inches.....110
Pounds test @ $1\frac{7}{8}$ inches..... 53

Exhaust Valve Spring

Pounds test @ $1\frac{11}{32}$ inches.....110
Pounds test @ $1\frac{11}{16}$ inches..... 53

Install valve springs with closed or dampening coils against cylinder head.

Diesel Models

15. Intake and exhaust valve guides are interchangeable. Press old guides out from bottom of head so they emerge at top of head. Press new guides into combustion chamber side of head. Distance from port end of intake valve guide to face of valve seat is $2\frac{3}{8}$ inches. Distance from port-end of exhaust valve guide to face of valve seat is $1\frac{13}{32}$ inches. Refer to Fig. C761. Ream the guides after installation to an inside diameter of 0.3422-0.3432. This provides a normal stem to guide clearance of 0.0008-0.0026 for the intake, 0.0032-0.0050 for the exhaust. Desired stem to guide clearance is 0.0015 for the intake, 0.004 for the exhaust.

Suggested maximum wear limits pertaining to valve stems and guides are as follows:

Valve guide I. D.....0.3447
Stem diameter, Intake.....0.3386
Exhaust 0.3362
Stem to guide max. clearance, Intake.....0.0046
Exhaust 0.007

Note: Diameter wear limits are effective only when total clearance does not exceed maximum limits.

16. Intake and exhaust valve springs are interchangeable. New valve springs should test 58-64 pounds when compressed to a length of $1\frac{7}{8}$ inches and 115-123 pounds when compressed to a length of 1.521 inches. Used valve springs, however, will function satisfactorily providing they test at least 52 pounds when compressed to $1\frac{7}{8}$ inches and 105 pounds when compressed to 1.521 inches. Renew any spring which is rusted, discolored or does not meet the test specifications.

Install valve springs with closed or dampening coils against cylinder head.

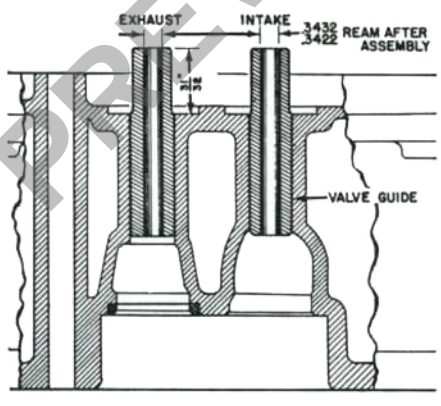

Fig. C760—Sectional view of the 300 non-diesel cylinder head, showing proper installation of valve guides.

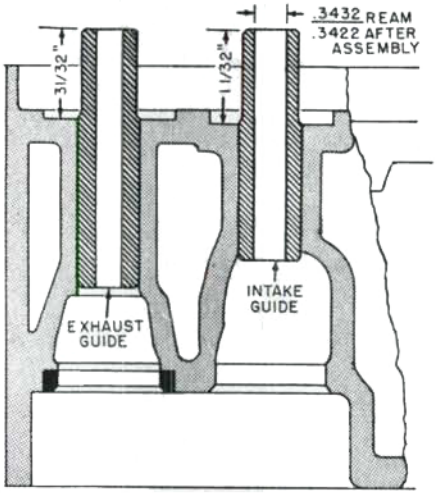

Fig. C760A—Sectional view of 200B, 300B, 350, 400B, 500B and 600B cylinder head showing proper valve guide installation.

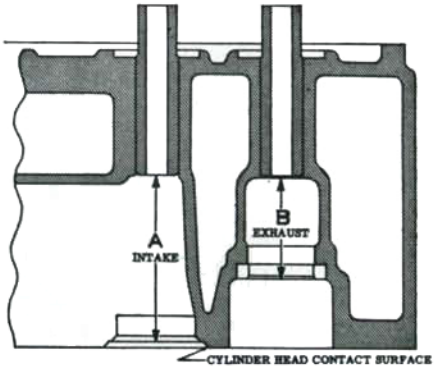

Fig. C761 — Sectional view of diesel cylinder head, showing proper installation of valve guides.

PREVIEW - YOUFIXTHIS.COM

YouFixThis.com

Download full manual at youfixthis.com

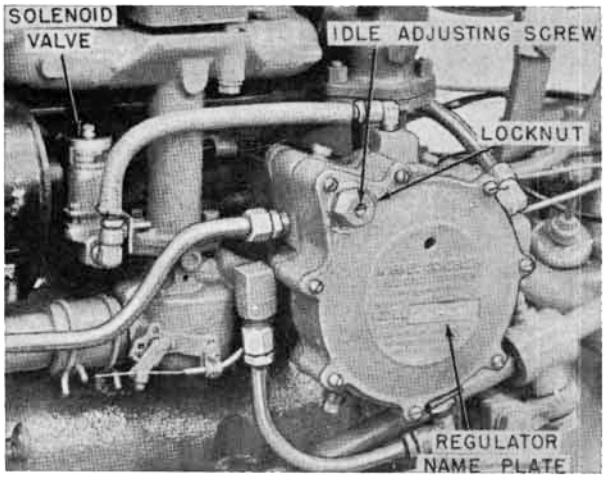

Fig. C781 — Side view of the 300 series LP-Gas engine showing the solenoid, carburetor and regulator installation.

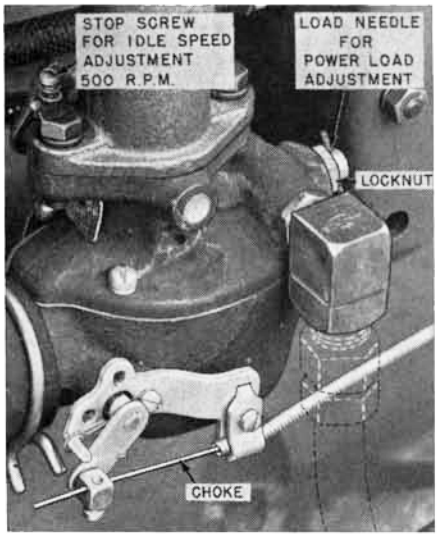

Fig. C782 — Series 300 LP-Gas carburetor showing the load adjusting screw and throttle stop screw.

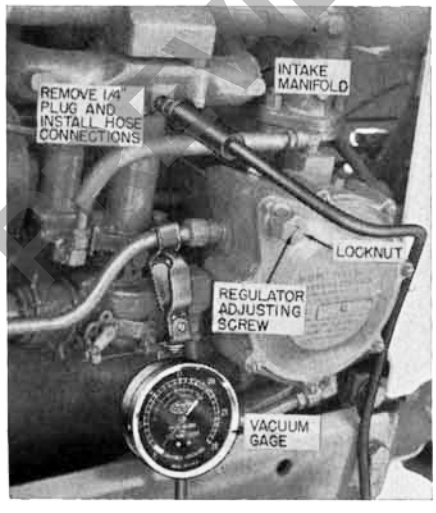

Fig. C783—Vacuum gage installation used when setting the 300 series idle adjusting screw.

Note: The preceding adjustments are only approximate settings. Final accurate settings should be made after engine is warm as follows:

46A. **IDLE ADJUSTING SCREW.** Remove the ¼-inch pipe plug from the intake manifold and connect a vacuum gage to the pipe plug opening as shown in Fig. C783. Start engine and bring to operating temperature. Place the hand throttle in the slow idle position and adjust the throttle stop screw (Fig. C782) to obtain an engine slow idle speed of 500 rpm. Loosen the lock nut and turn the idle adjusting screw on regulator to obtain the highest possible vacuum reading (approximately 19-20½ lbs.). Retighten the jam nut finger tight. Do not use a wrench on the lock nut or damage to the rubber gasket will result.

In the absence of a vacuum gage, the following procedure may be used: Place the hand throttle in the slow idle position and adjust the throttle stop screw to obtain an engine slow idle speed of 500 rpm. Turn the idle adjusting screw on regulator either way as required to obtain the highest rpm, then readjust the throttle stop screw to obtain a slow idle speed of 500 rpm.

46B. **LOAD ADJUSTMENT.** With engine at operating temperature and choke button fully in, set the throttle control in wide open position so that engine is running at approximately 1875 rpm. Loosen the lock nut on the load adjusting needle (Fig. C782) and turn the needle clockwise until the engine speed drops due to leanness. Then, turn the load needle counterclockwise until engine speed drops due to richness. Now, turn the needle clockwise to obtain the highest rpm and tighten the lock nut.

FUEL FILTER

Series 300

47. An exploded view of the liquid fuel filter is shown in Fig. C784. The filter is designed to stop the passage of scale, rust or other foreign material into the remainder of the system.

Note: If frost collects on outside of filter body, it is clogged and must be cleaned.

To clean the filter, close both of the fuel tank withdrawal valves, remove the assembly bolt and withdraw the filter base, gasket and element. If element appears to be in good condition, wash same in clean gasoline and dry with compressed air. If element contains considerable imbedded dirt, install a new element.

SOLENOID VALVE

Series 300

48. When ignition switch is turned on, the solenoid operated valve (Fig. C781) opens the fuel line to the regulator. When the switch is turned off, the valve is closed and the fuel supply is shut-off. Should the valve leak or become inoperative, it will be necessary to install a complete new unit as component parts are not sold separately. Before removing the unit, make certain that both fuel tank withdrawal valves are closed.

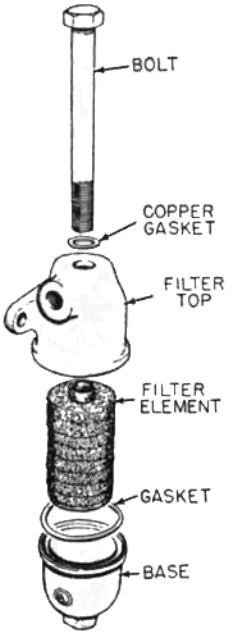

Fig. C784 — Exploded view of 300 series liquid LP-Gas filter. Filter is clogged when body shows frost.

PREVIEW - YOUFIXTHIS.COM

YouFixThis.com

Download full manual at youfixthis.com

PREVIEW ONLY

You're viewing 8 of 82 pages

The full manual includes:

- All 82 pages, complete
- Searchable PDF (find any keyword)
- No watermarks
- Instant download
- Print-ready quality

GET FULL MANUAL NOW

J. I. Case 200B, 300, 300B, 350, 400B, 500B, 600B Shop Manual

Scan or click anywhere
youfixthis.com

Click anywhere on this page to get the full manual