SECTION II, ELECTRICAL EQUIPMENT

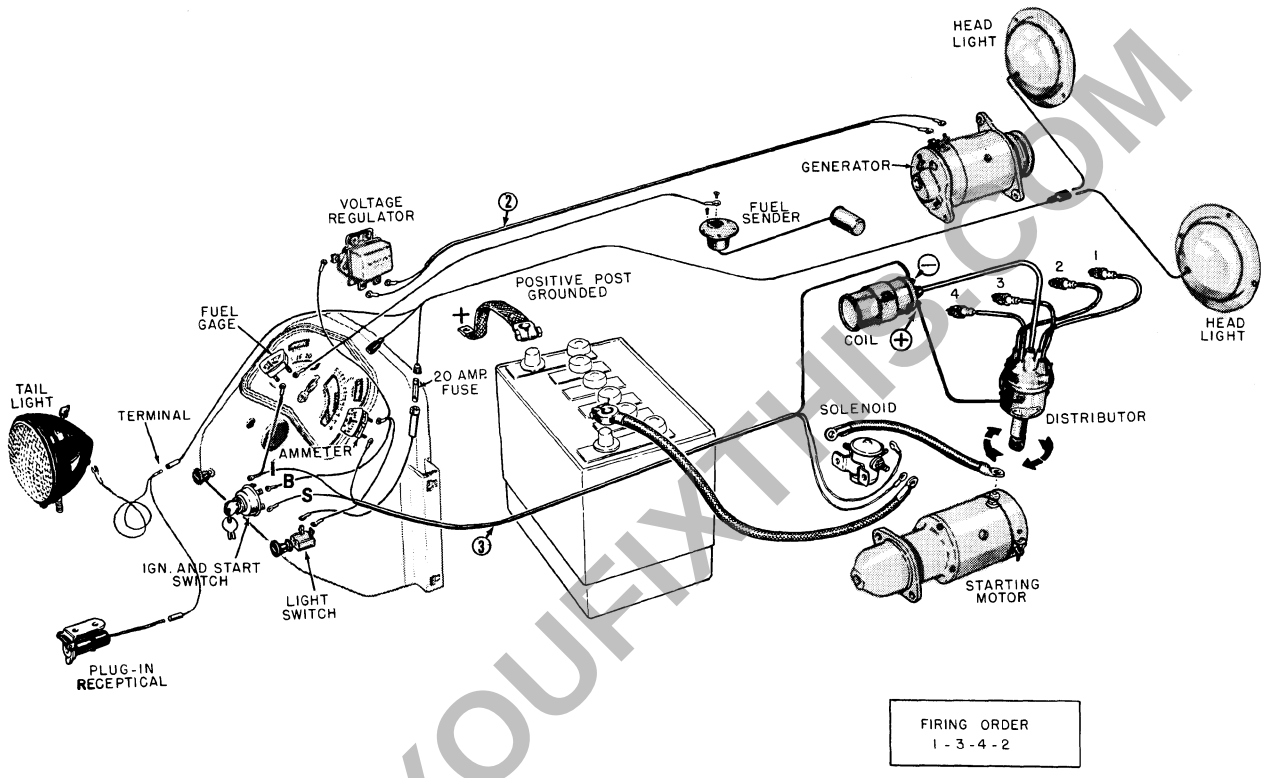

Fig. C-9 Model "400B" Wiring Diagram

The 2 wire cable (2) Fig. C-9 must be attached as follows: Red wire to armature post (large) on generator and connection A on voltage regulator. Black wire to field post (small) on generator to connection F on voltage regulator.

The 3 wire cable (3) Fig. C-9 must be attached as follows: Red wire to R.H. post on solenoid switch to lower post on ammeter. Black wire to negative post on coil to connection I on switch. Green wire to front post on solenoid switch to connection S on switch.

All other wires and cables are attached as shown in Fig. C-9. Be sure wire from side of distributor is attached to positive (+) post on coil.

The connection shown at the R. H. top of the instrument panel, Fig. C-9 is for attaching the two instrument panel light cables. There are also two additional wires and connectors provided for attaching mid mounted head lamps or other additional light.

CAUTION: *When installing new wiring or when reassembling tractor be sure wiring is located in such a manner that it will not be pinched, crushed or worn by other parts when assembly is complete.*

PREVIEW - YOUFIXTHIS.COM
Download full manual at youfixthis.com

SECTION IV, OIL FLOW CHARTS

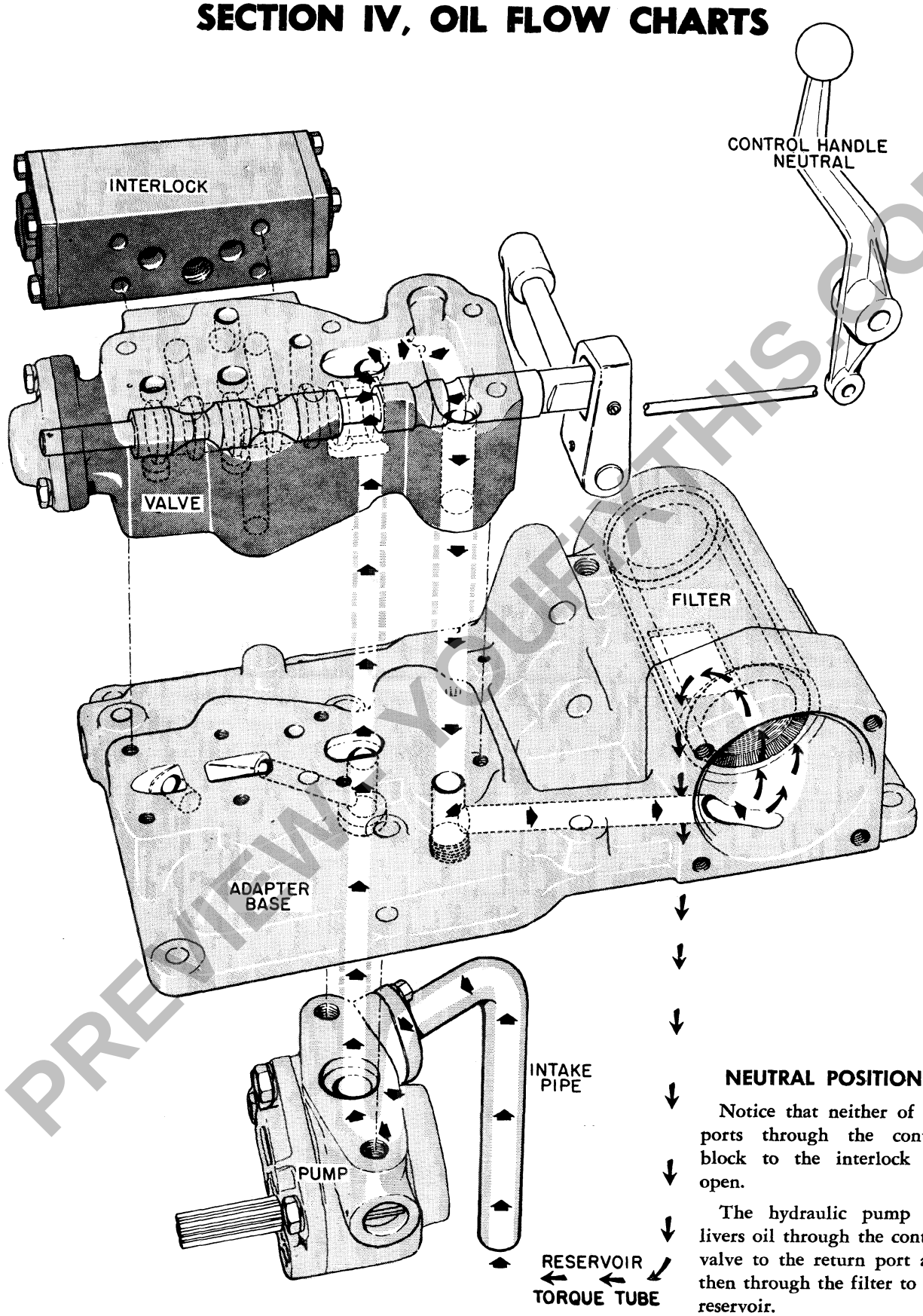

NEUTRAL POSITION

Notice that neither of the ports through the control block to the interlock are open.

The hydraulic pump delivers oil through the control valve to the return port and then through the filter to the reservoir.

Fig. H-27 Oil Flow

PREVIEW YOUFIXTHIS.COM

Download full manual at youfixthis.com

SECTION 1, GENERAL SPECIFICATIONS

When a nut is tightened on a bolt or stud, a clamping action is set up between the nut and the component parts. Actually as the nut is tightened, the bolt or stud is stretched or elongated slightly. This stretching action of the bolt or stud maintains the clamping force on the component parts being held together.

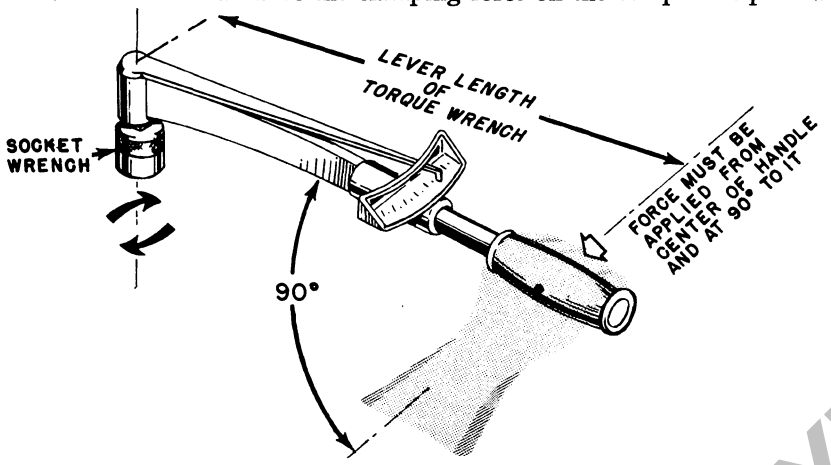

In order to properly control this stretch and not build up excessive pressures, (which can snap a bolt in two) the torque wrench should be used. However in order to obtain fairly accurate torque wrench tightness several factors must be understood. Failure to consider the following conditions will prevent an accurate torque wrench reading.

1. Be sure to lubricate the threads of the bolt before the nut is installed.
2. Use the exact type of washer, under the nut, that is called for in the service manual.
3. Be sure to pull the torque wrench handle with a steady even pull, exerted at right angles to the wrench handle, when the dial is being read. (DO NOT USE AN EXTENSION ON THE HANDLE. IT WILL CAUSE THE DIAL READING TO BE INACCURATE.)

Your torque wrench dial will register in "foot-pounds" of torque tightness. Be sure to use the recommended torque tightness shown in this manual, for each specific assembly procedure.

TORQUE WRENCH RECOMMENDATIONS

Camshaft Nut	80-90 ft. lbs.
Clutch to Flywheel	18 ft. lbs.
Clutch Yoke Alignment Bolt	35 ft. lbs.
Connecting Rod Bolts	45-50 ft. lbs.
Cylinder Head Stud Nuts	60-65 ft. lbs.
Engine Oil Pan Bolts	15 ft. lbs.
Engine Oil Pump	8 ft. lbs.
Flywheel Crankshaft	65-70 ft. lbs.
Fuel Tank Support Bracket (Gas)	15 ft. lbs.
Fuel Tank Support Bracket (L.P.)	40 ft. lbs.
Governor Control Rod Guide to Engine Block	15 ft. lbs.
Manifold Stud Nuts	30 ft. lbs.
Manifold to Carburetor Bolts	15 ft. lbs.
Mounting Rail to Engine	115 ft. lbs.
Mounting Rail to Torque Tube	115 ft. lbs.
Oil Filter to Base	25 ft. lbs.
Push Rod Adjusting Nuts	15 ft. lbs.
Radiator Mounting Bracket to Front End Casting	40 ft. lbs.
Radiator Studs to Bracket	25 ft. lbs.
Rear Main Bearing Seal and Retainer	6-8 ft. lbs.
Shoulder Bolt — Clutch Throwout Lever	75 ft. lbs.
Spark Plugs	34 ft. lbs.
Starter to Torque Tube	40 ft. lbs.
Timing Gear Cover Bolts	25 ft. lbs.
Torque Tube to Engine	115 ft. lbs.
Valve Rocker Arm Brackets	20 ft. lbs.
Water Pump	25 ft. lbs.

PREVIEW - YOUFIXTHIS.COM

Download full manual at youfixthis.com

SECTION VI, SPLITTING TRACTOR

This section deals with steps and safety precautions to be followed when splitting the tractor for engine removal. Notice the method in holding, supporting or lifting the various assemblies. Dimensional drawings are shown so similar devices can be made in your shop.

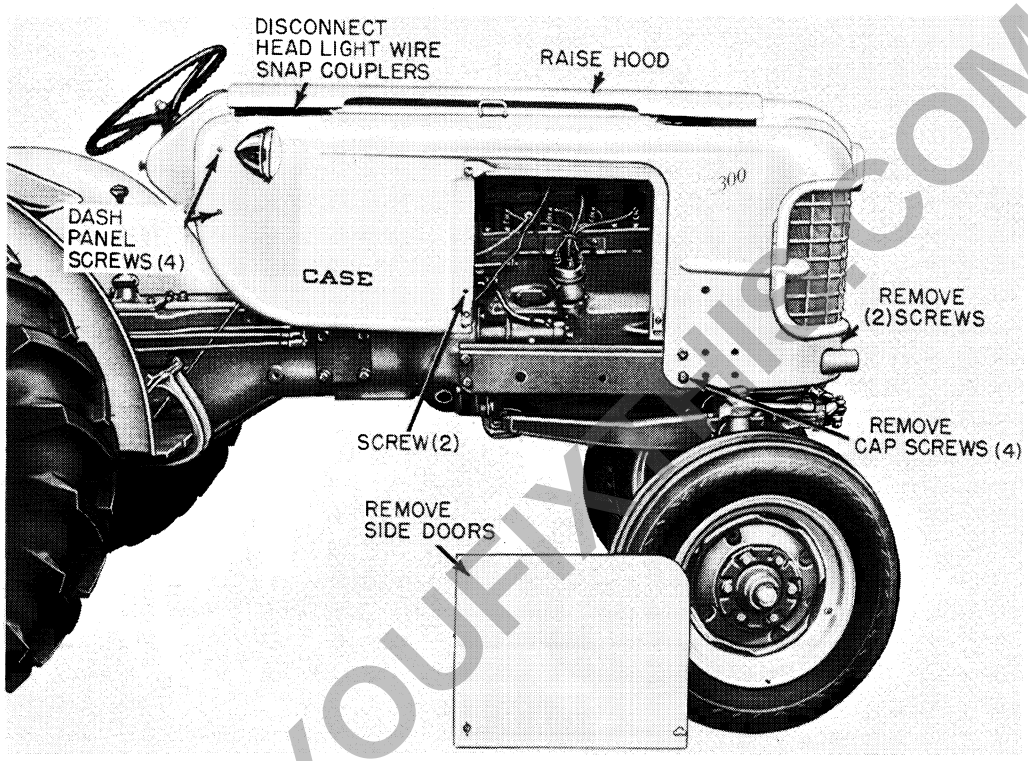

Fig. 1. The Sheet Metal

PREPARATION

1. Drain the cooling system.

2. Remove the sheet metal.

The "300" Series Tractor is designed for easy servicing. Simply remove a few screws and lift the entire sheet metal assembly from the tractor in one unit. The following steps make removal a quick operation:

a. Raise the hood and disconnect the headlamp wires. These are snap couplers and are found on either side of the battery. Figs. 1 and 3.

b. Remove the two engine side panels. Fig 1.

c. Extract hinge pin and remove radiator grille. Extract 3/16" x 1/2" round head screws and take out spacer bar. Fig. 2.

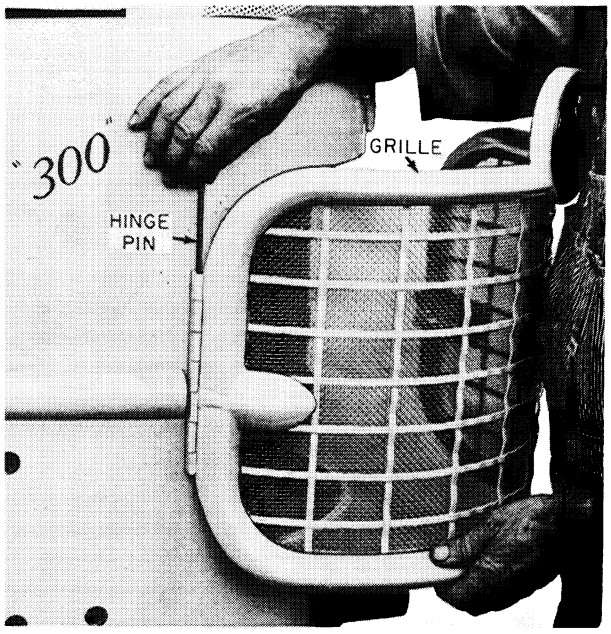

Fig. 2. Removing Grille Door

PREVIEW - YOUFIXTHIS.COM
Download full manual at youfixthis.com

SECTION II, ELECTRICAL EQUIPMENT

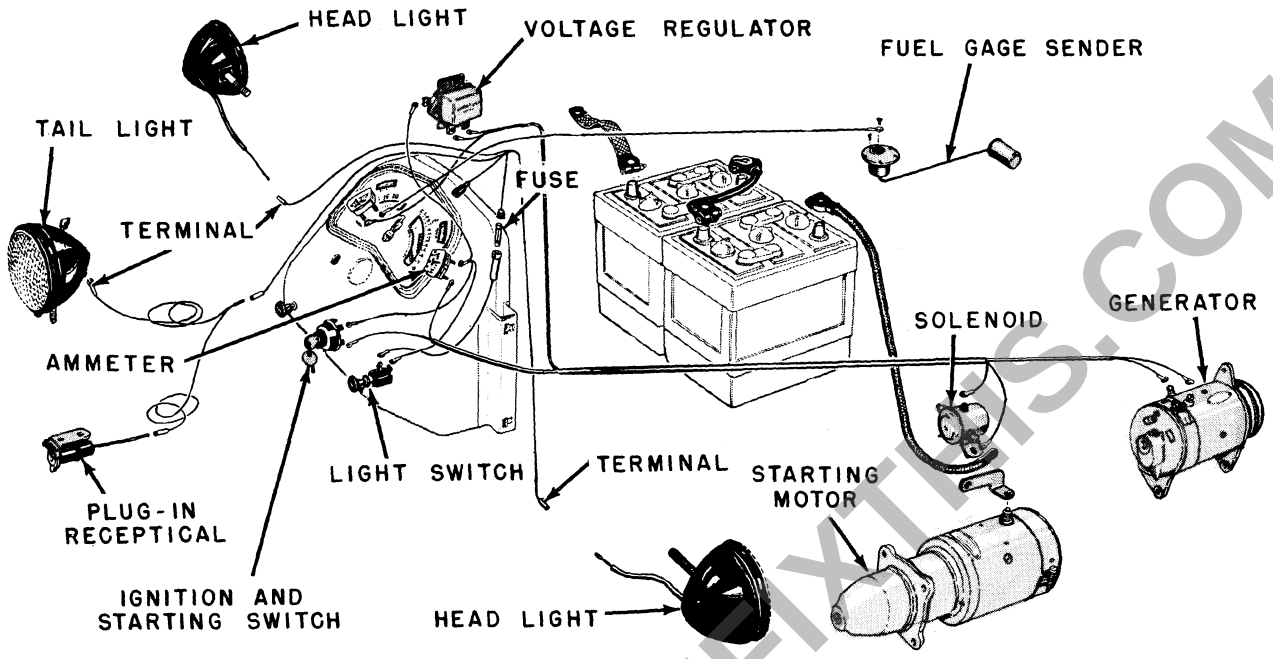

Fig. C-10 Model "300" 12 Volt (Diesel) Wiring Diagram

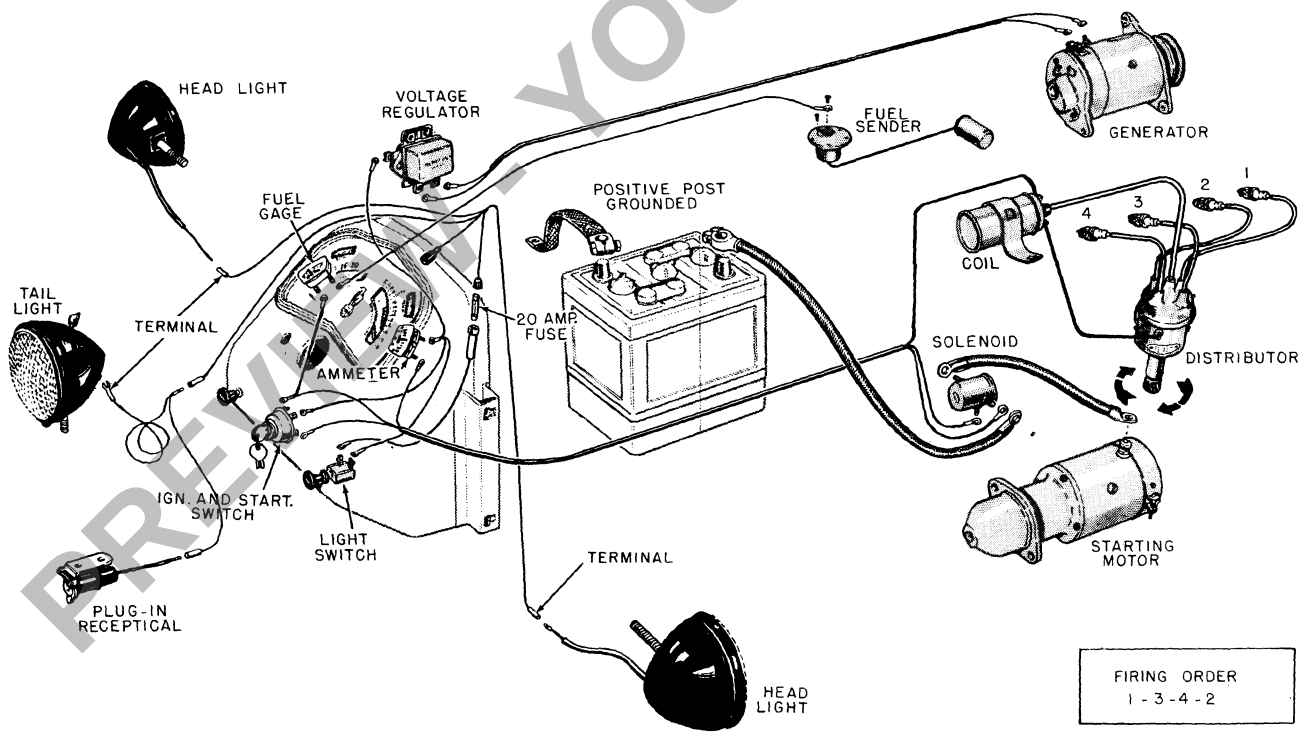

Fig. C-11 Model "300" 6 Volt (Gasoline) Wiring Diagram

PREVIEW - YOUFIXTHIS.COM

Download full manual at youfixthis.com

SECTION X, HYDRAULIC CONNECTIONS

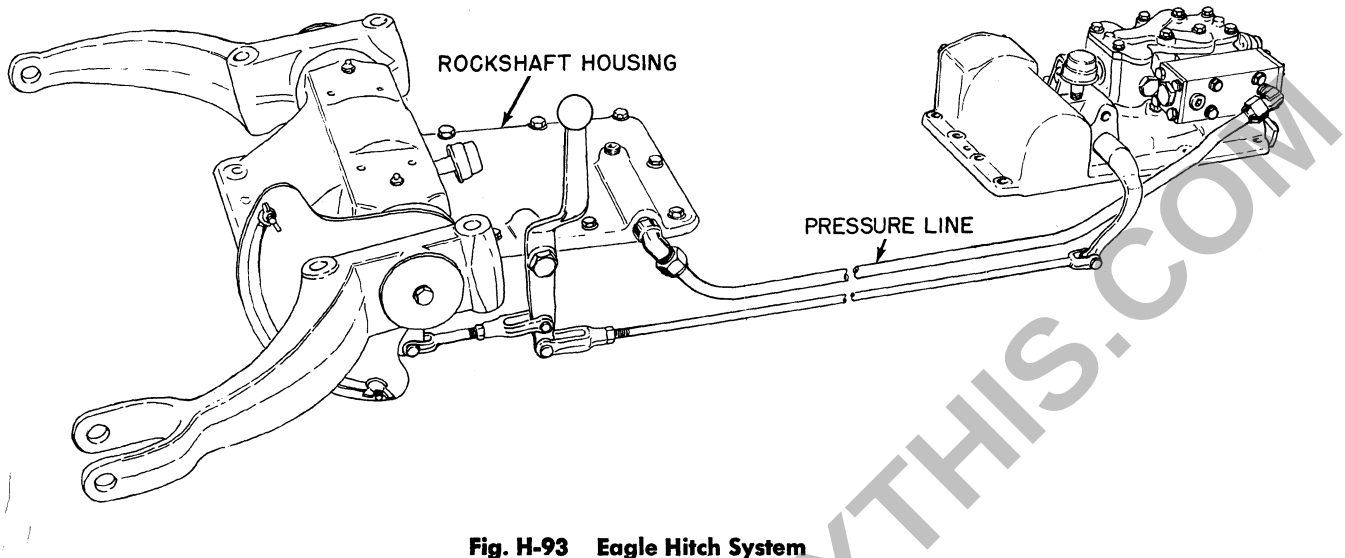

Fig. H-93 Eagle Hitch System

Oil is pumped to the cylinder in the rockshaft housing through a high pressure line. The detent ball and spring must be used in the control housing. See Fig. H-64. The inner port of the interlock block is open. Fig. H-44.

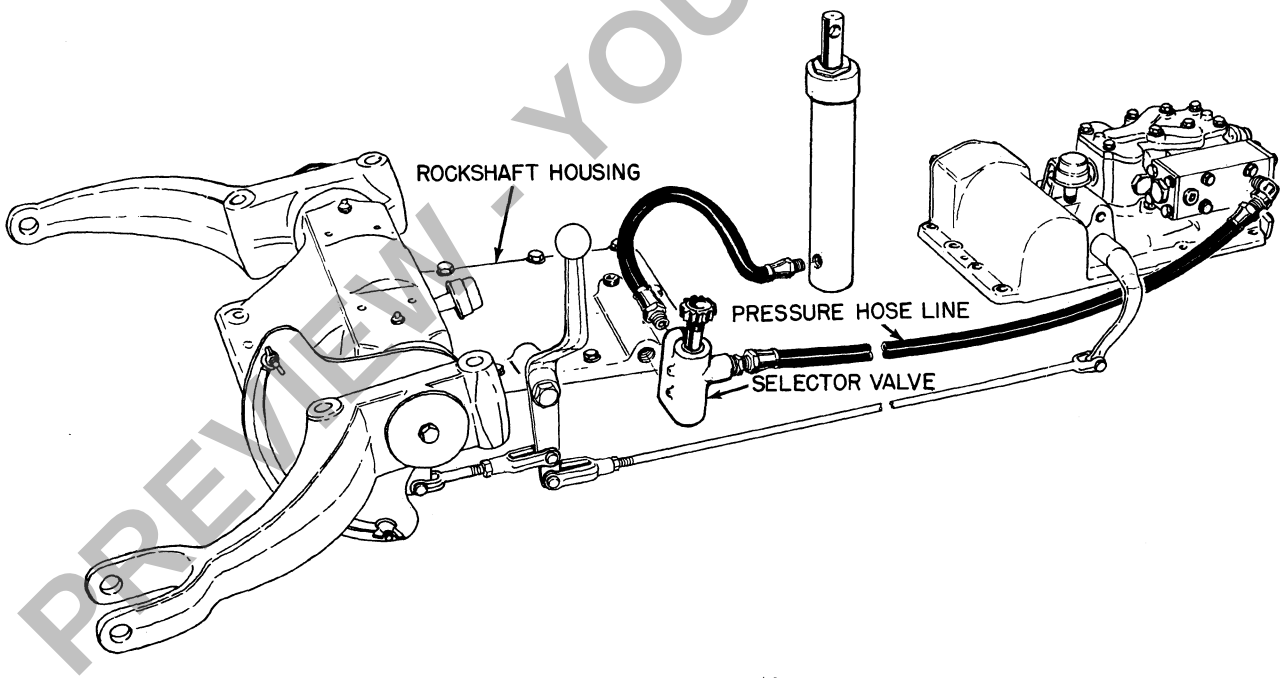

Fig. H-94 Eagle Hitch System with Selector Valve

The flow of oil can be diverted to either a single acting remote cylinder or rockshaft cylinder for Eagle Hitch operation by installing a selector valve at the point where the pressure line enters the rockshaft housing. The detent ball and spring remain in the control housing. Fig. H-64.

PREVIEW - YOUFIXTHIS.COM
Download full manual at youfixthis.com

SECTION I, SPECIFICATIONS

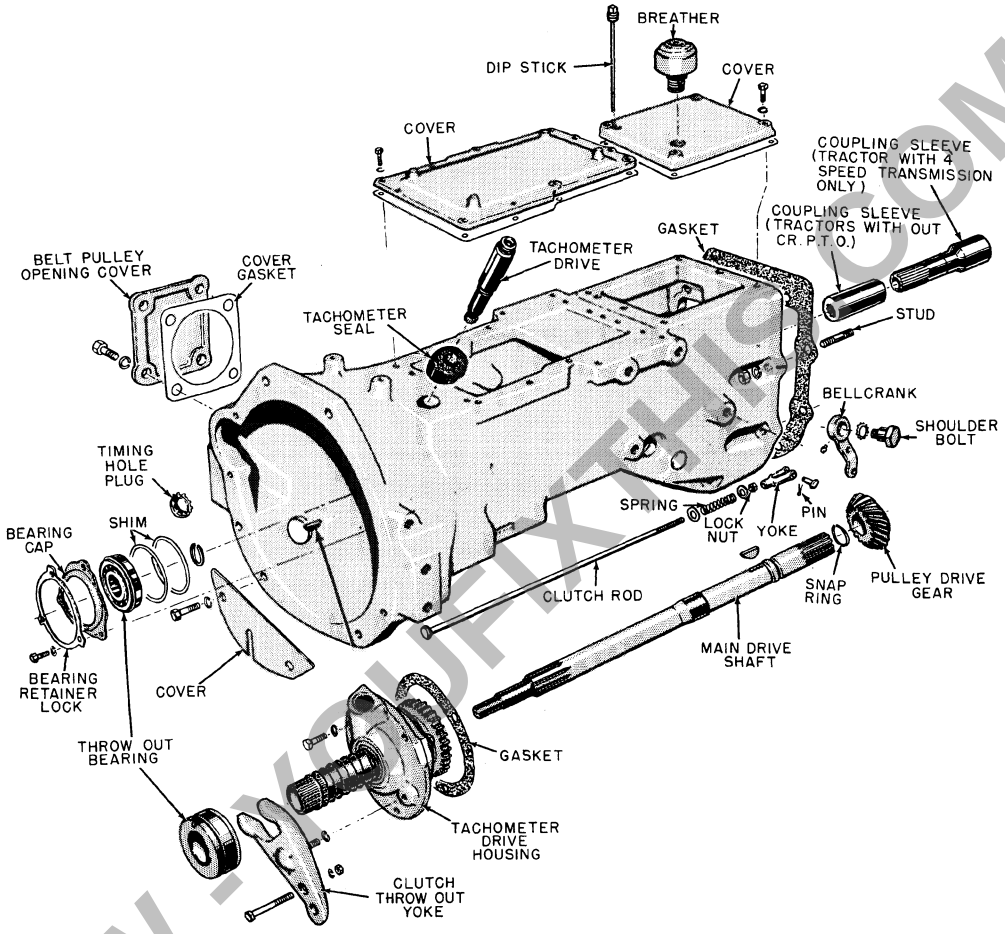

Fig. D-1 Torque Tube

The torque tube houses the drive shaft which is a means of transferring engine power to the transmission. In addition, the torque tube provides a housing for the clutch assembly, multiple plate clutch, Tripl Range or shuttle, and is also utilized as the oil reservoir for the hydraulic system.

The belt pulley is also attached to the torque tube with its power being transmitted through a beveled gear attached to the drive shaft, hence to the pulley assembly.

TORQUE WRENCH RECOMMENDATIONS

Starter to Torque Tube	40 ft. lbs.
Mounting Rail to Torque Tube	115 ft. lbs.
Torque Tube to Engine	115 ft. lbs.
Clutch Yoke Alignment Bolt	35 ft. lbs.
Shoulder Bolt Throw-out Lever	75 ft. lbs.
Front Top Opening Cover (Torque Tube)	30 ft. lbs.
Tachometer Drive Housing to Torque Tube	35 ft. lbs.
Belt Pulley to Torque Tube	100 ft. lbs.
Tripl Range to Torque Tube	35 ft. lbs.
Clutch Throw-out Collar	18 ft. lbs.
Power Take-Off Clutch Drum to Hub	38 ft. lbs.

PREVIEW - YOUFIXTHIS.COM
Download full manual at youfixthis.com

SECTION III, CYLINDER HEAD ASSEMBLY

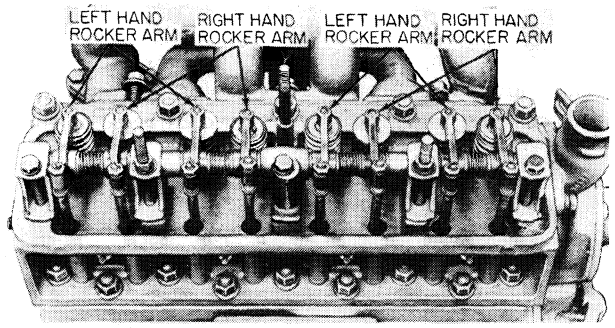

Fig. B-7. Right and Left Rocker Arm

STRIPPING AND REMOVING HEAD ASSEMBLY

In order to perform further servicing of cylinder head assembly it must be removed from the engine as follows:

1. Disconnect throttle rod at governor arm.

2. Remove carburetor and manifold as a unit. Unless servicing of one of these assemblies is required, no further disassembly is necessary. Fig. B-8.

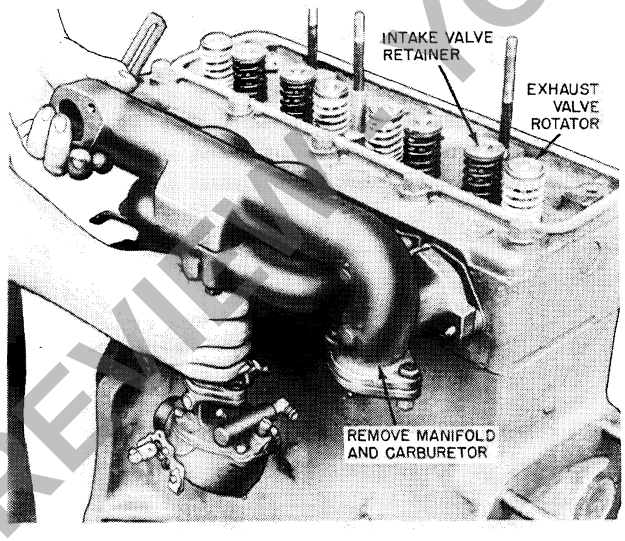

Fig. B-8. Removing Manifold Assembly

3. Remove water outlet elbow with hose and thermostat as a unit, Fig. B-9. For further servicing see Fig. B-66, Page B-40.

4. Using the special T-132 Torque Wrench Extension, loosen the cylinder head stud nuts as shown in Fig. B-10.

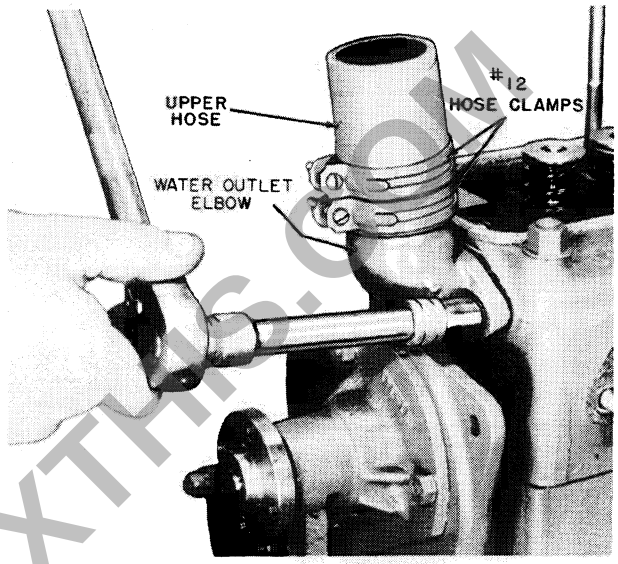

Fig. B-9. Water Outlet Elbow

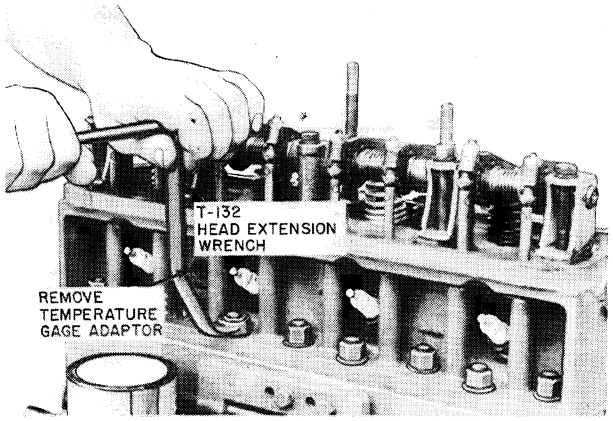

Fig. B-10. Using Wrench Extension

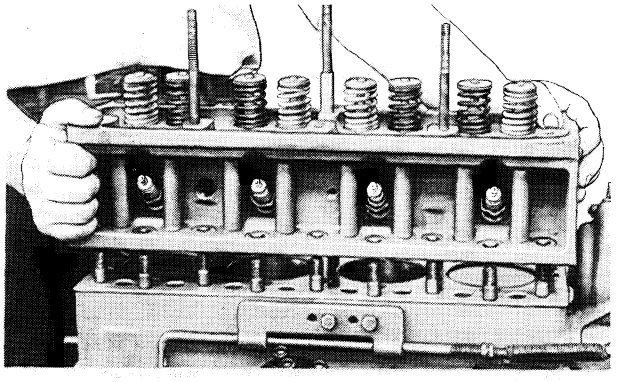

Fig. B-11. Removing Cylinder Head

5. Tap edges of the head with a lead or rawhide mallet and lift from engine as shown in Fig. B-11. *Do not attempt to pry head from the block as damage to the machined surfaces will result.*

PREVIEW YOUFIXTHIS.COM

Download full manual at youfixthis.com

SECTION XIII, GASOLINE FUEL SYSTEM

Service Instructions for Model TSX Carburetor

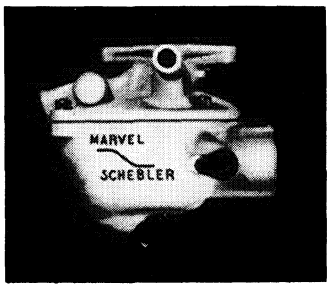

Type A — Fixed Jet

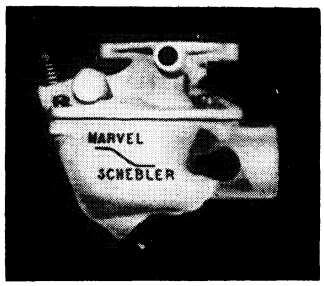

Type B — Adjustable Jet

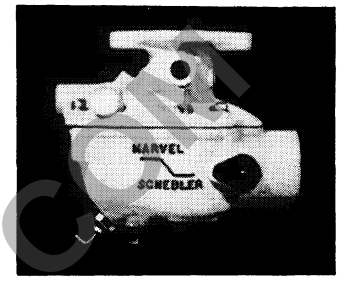

Type C — Adjustable Jet

The following procedure for service of all Model TSX Carburetors is for a complete overhaul. After removing carburetor from engine wash thoroughly with cleaning fluid such as gasoline to permit examination of external parts for damage. For type carburetor being serviced see illustrations above. Instructions apply to all types unless specified otherwise.

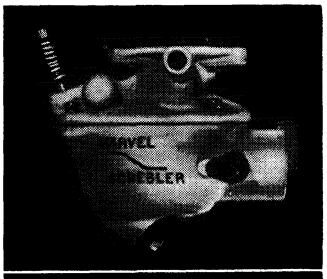

1 — Remove Power Adjusting Needle Assembly

Type B.

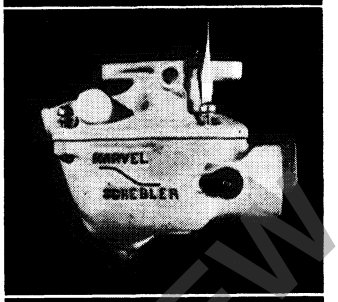

2 — Remove Bowl Cover Screws and Lock Washers

Separate Castings.

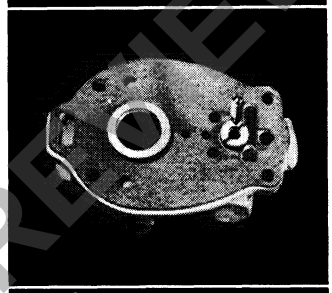

3 — Remove Float Valve, Bawl Gasket and Venturi

If Valve is grooved or damaged, replace Valve and Float Valve Seat.

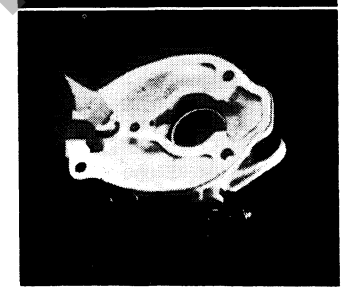

4 — Remove Float Valve Seat and Gasket

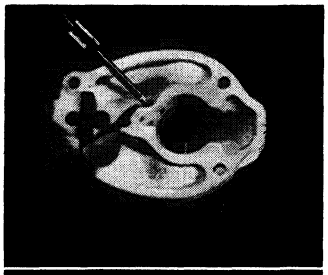

— 5 Remove Economizer Jet

NOTE. Not required in all carburetors. Check service parts list or repair kit of carburetor being serviced.



— 6 Remove Idle Jet

NOTE. Not required in all carburetors. Check service parts list or repair kit of carburetor being serviced.

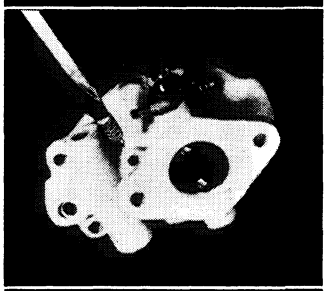

— 7 Removing Idle Adjusting Needle and Spring

Replace with new Needle if grooved or damaged.

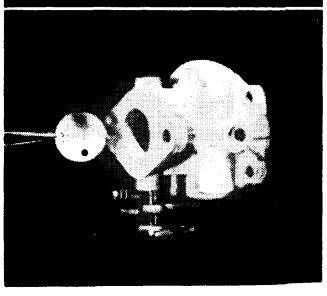

— 8 Remove Throttle Valve Screws, Valve and Throttle Shaft and Lever Assembly

Replace with new shaft and lever assembly if excessive looseness between shaft and throttle body.

PREVIEW - YOUFIXTHIS.COM

Download full manual at youfixthis.com

"300" SERIES TRACTORS

GROUP A — GENERAL

LIST OF CONTENTS

GROUP A — GENERAL

	Section
Tractor Models	I
Use of Manual	II
Lubrication	III
Torque Specification	IV
Special Tools	V
Splitting Tractor	VI

GROUP B — ENGINE

General Specification	I
Service Hints	II
Cylinder Head Assembly	III
Timing Gear Cover	IV
Lubricating System	V
Water Pump and Cooling System	VI
Clutch Assembly	VII
Camshaft	VIII
Crankshaft	IX
Crankshaft Bearings	X
Piston and Rod Assemblies	XI
Engine Sleeves	XII
Fuel System	XIII
Governor Linkage	XIV
L. P. Fuel System	XV

GROUP C — INSTRUMENTS AND ELECTRIC

GROUP D — TORQUE TUBE

Main Drive Shaft	I
Hydraulic Pump and Tachometer Drive	II
Multiple Plate Clutch	III
Belt Pulley	IV

GROUP E — TRANSMISSION

Specifications	I
Service Hints	II
Gear Shift Cover	III
Reverse Idler Gear	IV

PREVIEW - YOUFIXTHIS.COM

Download full manual at youfixthis.com

SECTION I, USE OF MANUAL

This is a "loose leaf" style of manual designed to be permanently kept up-to-date. Periodically, as changes, revisions or new developments take place, this data will be available to you in the form of new filler pages. When these pages are promptly inserted in the proper place in the manual, your Service Department will constantly have up-to-date service information available.

Here is how to use this manual:

2. GROUPS. Each complete unit or sub-assembly is covered in a "Group." Groups are identified by letters (A, B, C, etc.) To locate a *group* in which any particular assembly is contained, refer to the front page of this book.

To enable you to locate each group readily, the index on the first page is yellow. The group index lists the items covered within each section and page references.

2. SECTIONS. In each Group are Sections covering specific parts of the Group. Sections are designated by numerals (I, II, III, etc.)

3. PAGES. The pages are numbered consecutively within each Group. Page numbers, along with Group identification, appear in the lower *outside* corner of the page while the date on which the page is printed, along with the form number, appears in the lower inside corner.

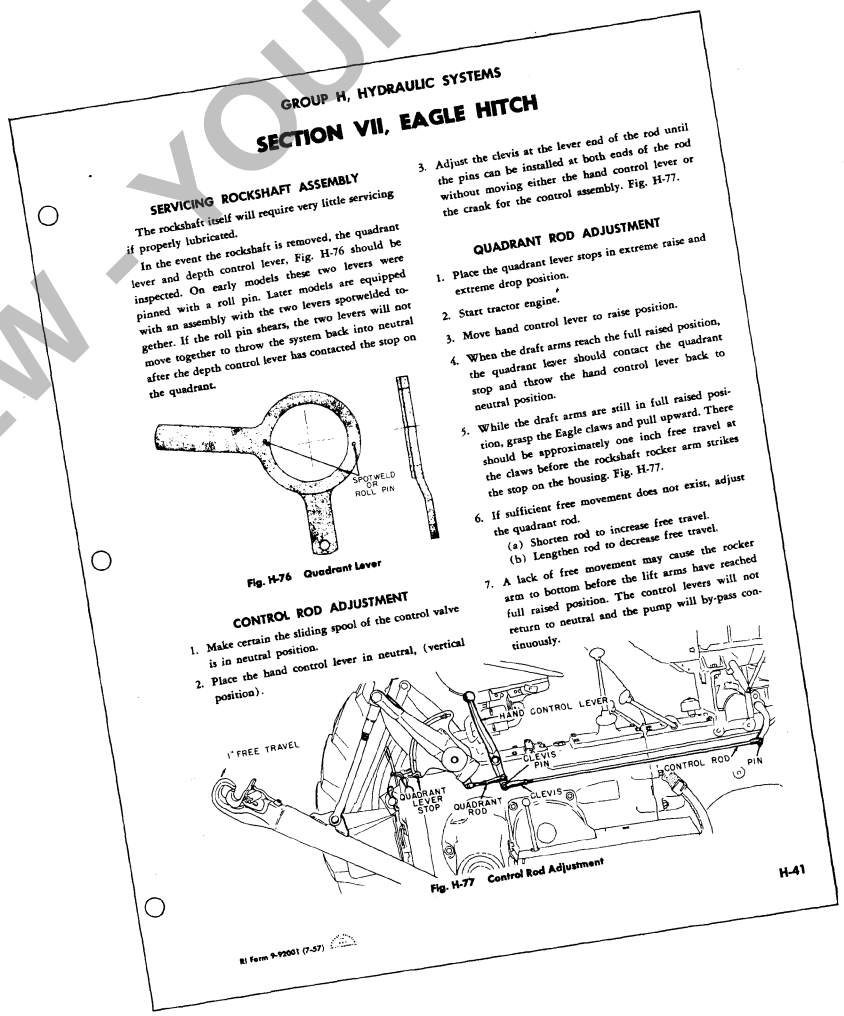

GROUP H, HYDRAULIC SYSTEMS

SECTION VII, EAGLE HITCH

SERVICING ROCKSHAFT ASSEMBLY

The rockshaft itself will require very little servicing if properly lubricated.

In the event the rockshaft is removed, the quadrant lever and depth control lever, Fig. H-76 should be inspected. On early models these two levers were pinned with a roll pin. Later models are equipped with an assembly with the two levers sportwelded together. If the roll pin shears, the two levers will not move together to throw the system back into neutral after the depth control lever has contacted the stop on the quadrant.

Fig. H-76 Quadrant Lever

CONTROL ROD ADJUSTMENT

1. Make certain the sliding spool of the control valve is in neutral position.
2. Place the hand control lever in neutral, (vertical position).
3. Adjust the clevis at the lever end of the rod until the pins can be installed at both ends of the rod without moving either the hand control lever or the crank for the control assembly. Fig. H-77.

QUADRANT ROD ADJUSTMENT

1. Place the quadrant lever stops in extreme raise and extreme drop position.
2. Start tractor engine.
3. Move hand control lever to raise position.
4. When the draft arms reach the full raised position, the quadrant lever should contact the quadrant stop and throw the hand control lever back to neutral position.
5. While the draft arms are still in full raised position, grasp the Eagle claws and pull upward. There should be approximately one inch free travel at the claws before the rockshaft rocker arm strikes the stop on the housing. Fig. H-77.
6. If sufficient free movement does not exist, adjust the quadrant rod.
   (a) Shorten rod to increase free travel.
   (b) Lengthen rod to decrease free travel.
7. A lack of free movement may cause the rocker arm to bottom before the lift arms have reached full raised position. The control levers will not return to neutral and the pump will by-pass continuously.

Fig. H-77 Control Rod Adjustment

H-41

IH Form 9-92001 (7-57)

PREVIEW - YOUFIXTHIS.COM

Download full manual at youfixthis.com

SECTION X, CRANKSHAFT BEARINGS

Excessive bearing clearance results in oil pumping or high oil consumption. Oil is forced out of the ends of the bearings and is thrown to all parts of the engine where part of it works into the combustion chamber and is burned. Oil consumption increases rapidly with a slight increase in bearing clearance when recommended specifications have been exceeded.

Insufficient running clearance results in bearing damage.

When running clearance exceeds .002 inches, new liners should be installed.

Running clearance can best be checked by using a plastic gaging material which is furnished commercially through most auto supply houses. This method is highly recommended as there is little danger of damaging bearing liners and an accurate reading can be obtained quickly and easily. Instructions for using will be furnished with material. See Page B-64.

In the event no other material is available, shim stock can be used; however, care must be taken not to scratch the bearing liners. To check clearance using shim stock, proceed as follows:

1. Install upper bearing liner.
2. Position lower bearing liner.
3. Insert a .002 inch brass shim (1¼x½") lengthwise between the bearing insert and shaft journal.
4. Install bearing cap.
5. Tighten nuts to 90 lbs. pull on torque wrench.
6. Rock crankshaft slightly to determine clearance.
7. A slight drag on shaft will be noticeable when running clearance is proper.
8. If no drag is present, the clearance is excessive.
9. Remove nuts, washers and bearing cap and remove brass shim.

UNDERSIZE LINERS

Whenever excessive wear occurs on the journals of the crankshaft, and standard bearing liners will no longer provide the recommended running clearance, the journals must be machined to the proper dimension and undersize liners installed. One exception is the use of .002 undersize liners which is discussed in a separate paragraph.

Main bearing journals on crankshaft are 2.250 to 2.2490 inches.

Before installing new bearing liners, check circumference of crankshaft across entire width of bearing journal with a micrometer. If readings fall below the low limits prescribed for main bearing journals, the shaft must be ground in accordance with chart on page B-61.

OUT-OF-ROUND JOURNALS

An out-of-round or oval crankshaft journal may present a more serious condition and result in higher oil consumption than a journal which is only slightly under specifications on all surfaces. This is true even though the journal may be within limits in either the vertical or horizontal surfaces.

If the journals are more than .005 inch out of round, they must be ground and undersize liners installed.

NOTE: *When checking journals with micrometer, always measure the entire circumference over the complete length of bearing.*

.002 UNDERSIZE LINERS

When standard bearing liners will no longer provide the recommended running clearance and conditions do not warrant grinding the shaft for .020 undersize liners, it may be possible to obtain proper clearance by installing .002 undersize liners. These liners can be installed without grinding the shaft, provided an out-of-round condition does not exist. The wall thickness of the .002 undersize part is slightly greater than other liners making it possible to take up excessive clearance without grinding the shaft in many cases. Check clearance after liners have been installed.

PREVIEW - YOUFIXTHIS.COM

Download full manual at youfixthis.com

SECTION XV, L. P. FUEL SYSTEM

REMOVAL OF PRIMARY BODY AND BAFFLE PLATE

1. Remove the seven screw and lock washer assemblies that hold the primary body to the secondary body.
2. Tap the primary body with a soft-faced hammer until it becomes loosened from the gasket. Carefully separate the primary body from the secondary body.
3. Remove the baffle plate and both gaskets. Gaskets will probably adhere to the parts and it will be necessary to scrape off the broken pieces.

REMOVAL OF IDLE ADJUSTING SCREW

1. Remove the cap and gasket from the secondary cover.
2. Remove the adjusting screw and nut, assembled.
3. Lift out the spring.

REMOVAL OF SECONDARY DIAPHRAGM AND COVER

1. Remove the eight screw and lock washer assemblies that hold the secondary cover to the secondary body.
2. Tap around the edge of the cover with a soft-faced hammer to loosen it, and carefully separate the secondary cover from the secondary body to avoid damaging the diaphragm assembly.
3. Remove the three screws, sealing plate and diaphragm assembly from the secondary cover.

REMOVAL OF SECONDARY VALVE ASSEMBLY

Remove the two screw and lock washer assemblies to free the secondary valve lever, and secondary valve leaf lever from the secondary body.

REMOVAL OF PRIMARY VALVE ASSEMBLY

1. Remove the two screw and lock washer assemblies to free the primary lever bracket and primary lever assembly from the primary body.
2. Remove the primary lever spring.
3. Remove the primary valve seat.

CLEANING

1. Wash all parts except diaphragms and valves in gasoline or solvent. If necessary, the parts can be immersed and stubborn materials removed by brushing with a small paint brush. Rinse in clean solution and dry with compressed air.
2. The diaphragms will normally be clean, since it is difficult for foreign material to enter the regulator; however, if dirty, wipe the affected areas with a cloth moistened with the cleaning solvent.
3. The valves can be cleaned by wiping the surfaces with a clean, dry cloth.

NOTE: *Shop facilities usually include a special cleaning tank with a commercial carburetor cleaner. If so, all parts except diaphragms and valves can be cleaned in this manner, provided the parts are properly rinsed and dried after cleaning.*

INSPECTION

1. Visually check all parts for damage such as cracks in housings and covers. Any obviously damaged parts should be replaced.
2. Replace all gaskets each time the unit is disassembled for overhaul.
3. Inspect the diaphragms for signs of chafing, tears, and worn spots. Also, check for excessive wrinkling which will result if the diaphragms have been stretched through extended use. If the condition of diaphragms is questionable, replace them.
4. Check the valves and operating levers for obvious wear and misalignment. It must be remembered that the valves contact and leave their seats with extreme sensitivity and, if the valve faces are grooved, scratched, or scored, they must be replaced.

PREVIEW - YOUFIXTHIS.COM

Download full manual at youfixthis.com

SECTION II, SERVICE HINTS

Oil Transfer — Torque Tube to Transmission — Tripl-Range or Shuttle Transmission

Preliminary Diagnosis

Make the same preliminary diagnosis as outlined for "Oil Transfer — Standard Transmission."

Oil Transfer — Torque Tube to Transmission — Tripl-Range or Shuttle Transmission

PROBABLE CAUSE	SUGGESTED REMEDY	REFERENCE
1. Same as Steps 1 through 5 above — "Oil Transfer — Standard Transmission."		
2. Expansion plug leaking — Tripl-Range Housing or Low Range Housing (Shuttle)	2. Replace plug and seal	2. Page E-34

Brakes Fail to Hold

1. Improper pedal adjustment	1. Adjust brakes	1. Page E-30
2. Disc facing glazed	2. Roughen facing surface	2. Page E-30
3. Oil leak from differential	3. Inspect for leaks	3. Page E-27
4. Spring in actuating assembly broken	4. Replace spring	4. Page E-30
5. Lug in brake cover worn	5. Replace cover	5. Page E-30

Brakes Drag

1. Improper pedal adjustment	1. Adjust brakes	1. Page E-30
2. Brake pedal return spring broken	2. Replace spring	2. Page E-29

Oil Leaking into Brakes

1. Oil leak at side gear expansion plug	1. Replace plug	1. Page E-25
2. Oil leak at seal in bearing carrier	2. Replace seal	2. Page E-27
3. Improper differential bearing adjustment	3. Adjust bearings	3. Page E-27

Speedometer Does Not Register

1. Gear and shaft fallen out of drive assembly	1. Replace drive	1. Page E-22
2. Drive sleeve turning on pinion shaft	2. Install new pin	2. Page E-22

PREVIEW - YOUFIXTHIS.COM

Download full manual at youfixthis.com

INDEX

SECTION X, REMOVING REAR AXLE *Page*

Removing Rear Axle (General Purpose) F-3

Removing Rear Axle (Utility Models) F-3

Installing Axle (General Purpose) F-3

Installing Flanged Axle (Utility Models) F-4

PREVIEW - YOUFIXTHIS.COM

Download full manual at youfixthis.com

SECTION VIII, POWER STEERING—Gasoline Utility Models

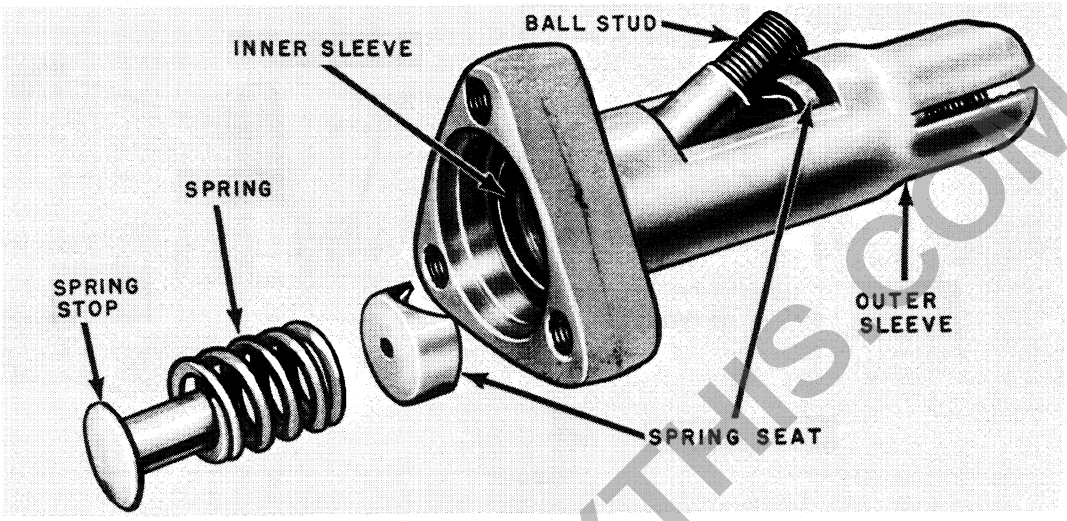

Fig. G-73 Outer Sleeve Assembly

5. Insert a small round tool through the tie rod end of outer sleeve and move the inner sleeve with seats and stud to the flange end of the outer sleeve. Fig. G-74.

6. Push the valve spool bolt through the torque adjusting screw stop and turn screw stop into the inner sleeve. Tighten the screw stop and then back off until nearest hole lines up with slots in sleeve. Push adjusting screw lock pin into position. Fig. G-74.

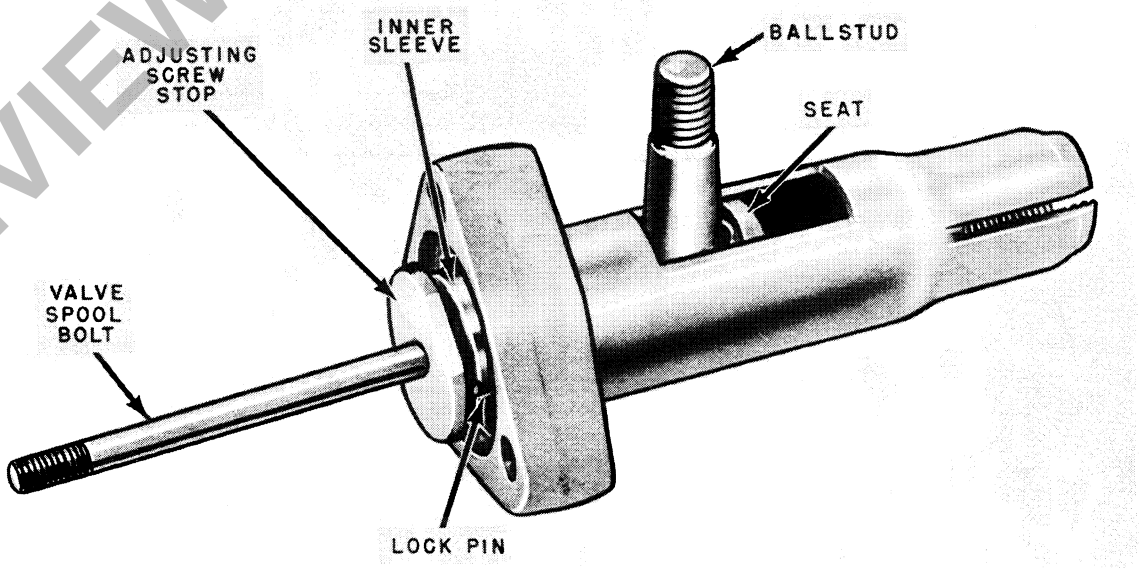

Fig. G-74 Installing Valve Spool Bolt

PREVIEW - YOUFIXTHIS.COM

Download full manual at youfixthis.com

SECTION V, INTERLOCK

2. The distance from the ends of the plunger to the center section must not vary more than 1/64" from the dimension shown in Fig. H-40. Shortness on the end of the plunger towards the pressure line end of the interlock block would cause vibration in the system during the lowering operation. This could only be corrected by replacing the plunger or by reversing it end for end.

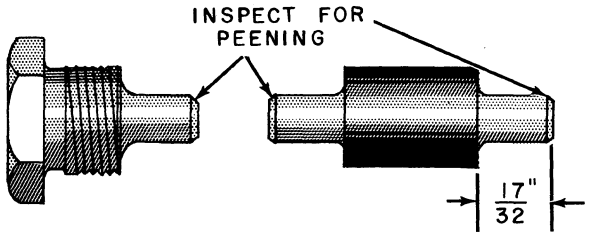

Fig. H-40 Plug and Plunger

INSPECTING "O" RINGS

1. "O" rings must be free from nicks or cuts in order to form a leakproof seal. Check as shown in Fig. H-41.
2. Also check for hardness resulting from hot oil or old age. Squeeze ring between your fingers to determine whether they are still soft enough to form a good seal when secured in position.

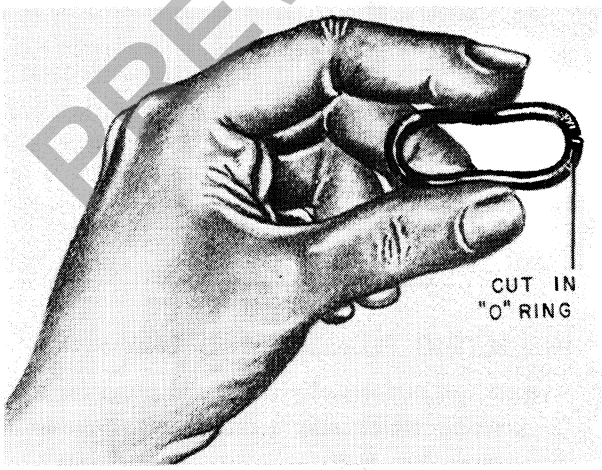

Fig. H-41 Inspecting "O" Ring

ASSEMBLY OF INTERLOCK

1. Insert ball and spring into cap.
2. Place copper gasket on end plug.
3. Make certain gasket is centered for a proper seal and then tighten finger tight.

CAUTION: If there were two copper gaskets on the plug when it was removed, make certain two of them are replaced. (See paragraph on "Testing for Back Pressure.)

4. Install inner and outer "O" rings in position as shown in Figure H-32.
5. Attach one cap assembly using four 5/16" x 1" inch bolts.
6. Torque bolts to 18 foot pounds.
7. Insert plunger through open end of block.

CAUTION: If the plunger has one end chamfered, it must be installed as shown in Fig. H-42. This positions the chamfered end towards the port opening which is nearest to the mounting holes.

8. Later models do not include a chamfer on the plunger. These plungers can be reversed end for end. (See paragraph on "Testing for Back Pressure.")

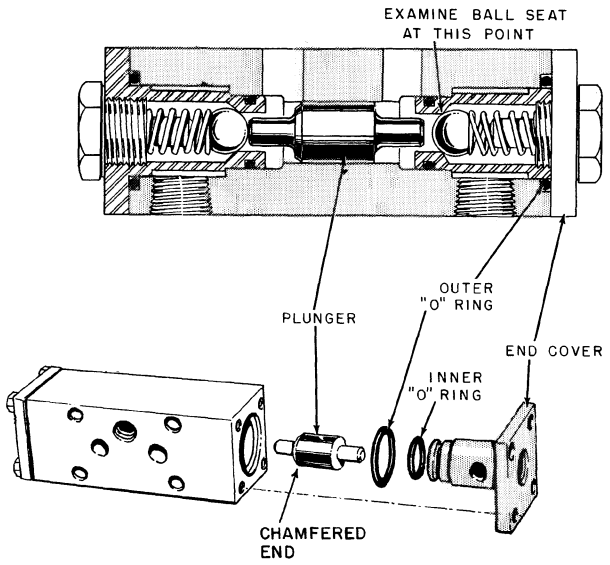

Fig. H-42 Positioning Plunger

PREVIEW - YOUFIXTHIS.COM

Download full manual at youfixthis.com

PREVIEW ONLY

You're viewing 17 of 333 pages

The full manual includes:

- All 333 pages, complete
- Searchable PDF (find any keyword)
- No watermarks
- Instant download
- Print-ready quality

GET FULL MANUAL NOW

Case 300, 300B, 400B, 310, 312, 301, 311 Service Manual

Scan or click anywhere
youfixthis.com

Click anywhere on this page to get the full manual