TORQUE SPECIFICATIONS - DECIMAL HARDWARE

Use the torques in this chart when special torques are not given. These torques apply to fasteners with both UNC and UNF threads as received from suppliers dry, or when lubricated with engine oil. Not applicable if special graphities, Molydisulfide greases, or other extreme pressure lubricants are used.

Grade 5 Bolts, Nuts, and Studs



Size	Pound-Inches	Newton metres
1/4 inch	108 to 132	12 to 15
5/16 inch	204 to 252	23 to 28
3/8 inch	420 to 504	48 to 57
Size	Pound-Feet	Newton metres
7/16 inch	54 to 64	73 to 87
1/2 inch	80 to 96	109 to 130
9/16 inch	110 to 132	149 to 179
5/8 inch	150 to 180	203 to 244
3/4 inch	270 to 324	366 to 439
7/8 inch	400 to 480	542 to 651
1.0 inch	580 to 696	787 to 944
1-1/8 inch	800 to 880	1085 to 1193
1-1/4 inch	1120 to 1240	1519 to 1681
1-3/8 inch	1460 to 1680	1980 to 2278
1-1/2 inch	1940 to 2200	2631 to 2983

Grade 8 Bolts, Nuts, and Studs



Size	Pound-Inches	Newton metres
1/4 inch	144 to 180	16 to 20
5/16 inch	288 to 348	33 to 39
3/8 inch	540 to 648	61 to 73
Size	Pound-Feet	Newton metres
7/16 inch	70 to 84	95 to 114
1/2 inch	110 to 132	149 to 179
9/16 inch	160 to 192	217 to 260
5/8 inch	220 to 264	298 to 358
3/4 inch	380 to 456	515 to 618
7/8 inch	600 to 720	814 to 976
1.0 inch	900 to 1080	1220 to 1465
1-1/8 inch	1280 to 1440	1736 to 1953
1-1/4 inch	1820 to 2000	2468 to 2712
1-3/8 inch	2380 to 2720	3227 to 3688
1-1/2 inch	3160 to 3560	4285 to 4827

NOTE: *Use thick nuts with Grade 8 bolts.*

PREVIEW - YOUFIXTHIS.COM

Download full manual at youfixthis.com

RUN-IN INSTRUCTIONS

Engine Lubrication

Fill the 4-390, 4T-390, and the 4TA-390 engine crankcase with a high quality SAE 15W-40 service classification oil.

Lower viscosity lubricating oils can aid in starting the engine and provide sufficient lubricating oil flow at temperatures below -5°C [23°F]. Please refer to the following chart.

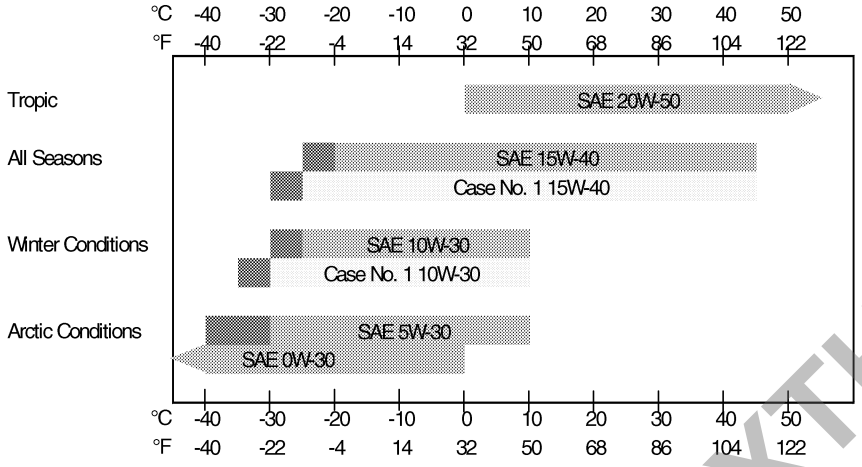

NOTE: *The continuous use of low viscosity lubricating oils can decrease engine life.*

NOTE: *When using Case No. 1 engine oil, the use of an engine oil heater or a jacket water heater is required.*

NOTE: *CC/CD or CD/SF engine oils can be used where CE oil is not available. When these oils are used, reduce the oil change interval to one-half the normal maintenance interval.*

Install new oil filters after the engine is rebuilt.

Run-In Procedure for Rebuilt Engines (with a Dynamometer)

The following procedure must be followed when using a PTO dynamometer to Run-In the engine. The dynamometer will control the engine load at each speed and will remove stress on new parts during Run-In.

During the Run-In, continue to check the oil pressure, coolant level and coolant temperature.

Step 1 Disconnect the wire to the electric shut-off on the injection pump so that the engine will not start. Crank the engine for 30 seconds until there is oil pressure, then reconnect the wire.

Step 2 Remove the air from the cooling system at the temperature sending unit or aftercooler, if equipped.

Step 3 Run the engine at 800 RPM for 3 to 5 minutes. The oil pressure should be a minimum of 1009 kPa. Check for leaks.

Step 4 Increase the engine speed to 1200 RPM and increase the test load to 25% of the rated load. The coolant temperature should be a minimum of 70°C. Run the engine for 5 minutes.

Step 5 Check the blowby. If the reading is steady, increase the engine speed to peak torque speed and increase the load to 50% of the peak torque load. Run the engine for 5 minutes.

Step 6 Check the blowby. If the reading is steady, increase the engine speed to full throttle and increase the load until the RPM falls to rated torque speed. Run the engine for 5 minutes.

Step 7 Check the gauges. If the readings are within limits, increase the load until the engine speed decreases to the peak torque RPM. Run the engine for 5 minutes.

Step 8 Completely remove the load and reduce the engine speed to 1000 RPM. Run the engine for 3 to 5 minutes.

Step 9 Shut off the engine.

PREVIEW. YOUFIXTHIS.COM

Download full manual at youfixthis.com

TORQUE SPECIFICATIONS - METRIC HARDWARE

Use the following torques when specifications are not given.

These values apply to fasteners with coarse threads as received from supplier, plated or unplated, or when lubricated with engine oil. These values do not apply if graphite or Molydisulfide grease or oil is used.

Grade 8.8 Bolts, Nuts, and Studs



Size	Pound-Inches	Newton metres
M4	24 to 36	3 to 4
M5	60 to 72	7 to 8
M6	96 to 108	11 to 12
M8	228 to 276	26 to 31
M10	456 to 540	52 to 61
Size	Pound-Feet	Newton metres
M12	66 to 79	90 to 107
M14	106 to 127	144 to 172
M16	160 to 200	217 to 271
M20	320 to 380	434 to 515
M24	500 to 600	675 to 815
M30	920 to 1100	1250 to 1500
M36	1600 to 1950	2175 to 2600

Grade 10.9 Bolts, Nuts, and Studs



Size	Pound-Inches	Newton metres
M4	36 to 48	4 to 5
M5	84 to 96	9 to 11
M6	132 to 156	15 to 18
M8	324 to 384	37 to 43
Size	Pound-Feet	Newton metres
M10	54 to 64	73 to 87
M12	93 to 112	125 to 150
M14	149 to 179	200 to 245
M16	230 to 280	310 to 380
M20	450 to 540	610 to 730
M24	780 to 940	1050 to 1275
M30	1470 to 1770	2000 to 2400
M36	2580 to 3090	3500 to 4200

Grade 12.9 Bolts, Nuts, and Studs

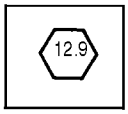

Usually the torque values specified for grade 10.9 fasteners can be used satisfactorily on grade 12.9 fasteners.

PREVIEW - YOUFIXTHIS.COM

Download full manual at youfixthis.com

REMOVING THE AFTERCOOLER

The following photographs show the engine removed from the machine. The aftercooler can be serviced with the engine installed in the machine.

STEP 1

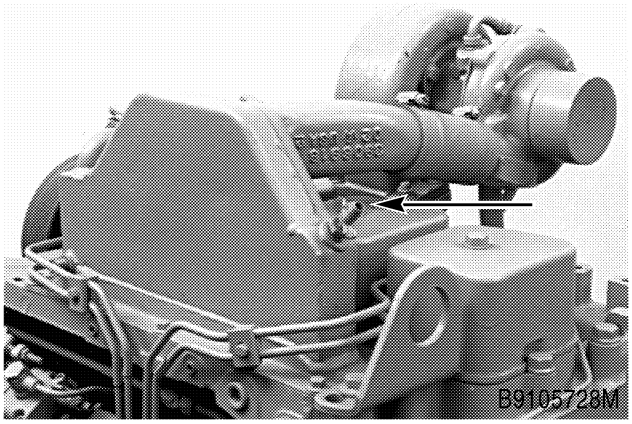

Open the air bleed valve or remove the plug and drain the coolant from the engine. Clean the aftercooler, turbocharger fuel injector lines, and the area around the aftercooler.

NOTE: *During installation, open the air bleed valve or remove the plug on the aftercooler as you fill the radiator with coolant. Close the air bleed valve or install the plug when coolant flows from the bleed valve.*

STEP 2

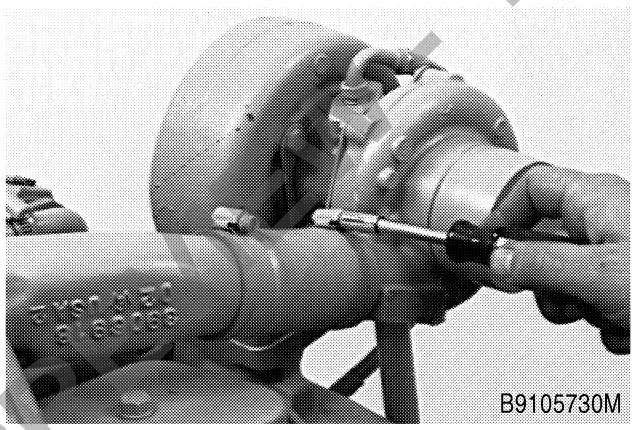

Loosen the clamp on the hose.

STEP 3

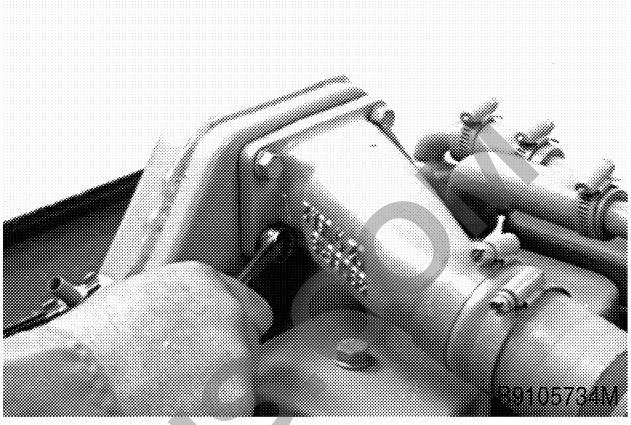

Remove the bolts from the air inlet.

NOTE: *During installation, tighten the bolts to 21 to 27 Nm.*

STEP 4



Remove the air inlet and hose.

STEP 5

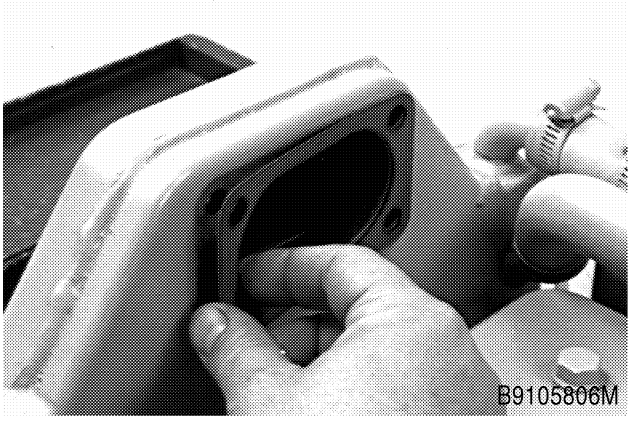

Remove the gasket.

NOTE: *During installation, apply a thin layer of Three Bond Silver RTV Sealer to both sides of a new gasket.*

PROPERTY OF YOUFIXTHIS.COM
Download full manual at youfixthis.com

TORQUE SPECIFICATIONS - STEEL HYDRAULIC FITTINGS

Tube OD Hose ID	Thread Size	Pound-Inches	Newton metres
37 Degree Flare Fitting			
1/4 inch 6.4 mm	7/16-20	72 to 144	8 to 16
5/16 inch 7.9 mm	1/2-20	96 to 192	11 to 22
3/8 inch 9.5 mm	9/16-18	120 to 300	14 to 34
1/2 inch 12.7 mm	3/4-16	180 to 504	20 to 57
5/8 inch 15.9 mm	7/8-14	300 to 696	34 to 79
Tube OD Hose ID	Thread Size	Pound-Inches	Newton metres
3/4 inch 19.0 mm	1-1/16-12	40 to 80	54 to 108
7/8 inch 22.2 mm	1-3/16-12	60 to 100	81 to 135
1.0 inch 25.4 mm	1-5/16-12	75 to 117	102 to 158
1-1/4 inch 31.8 mm	1-5/8-12	125 to 165	169 to 223
1-1/2 inch 38.1 mm	1-7/8-12	210 to 250	285 to 338

Tube OD Hose ID	Thread Size	Pound-Inches	Newton metres
Straight Threads with O-ring			
1/4 inch 6.4 mm	7/16-20	144 to 228	16 to 26
5/16 inch 7.9 mm	1/2-20	192 to 300	22 to 34
3/8 inch 9.5 mm	9/16-18	300 to 480	34 to 54
1/2 inch 12.7 mm	3/4-16	540 to 804	57 to 91
Tube OD Hose ID	Thread Size	Pound-Inches	Newton metres
5/8 inch 15.9 mm	7/8-14	58 to 92	79 to 124
3/4 inch 19.0 mm	1-1/16-12	80 to 128	108 to 174
7/8 inch 22.2 mm	1-3/16-12	100 to 160	136 to 216
1.0 inch 25.4 mm	1-5/16-12	117 to 187	159 to 253
1-1/4 inch 31.8 mm	1-5/8-12	165 to 264	224 to 357
1-1/2 inch 38.1 mm	1-7/8-12	250 to 400	339 to 542

Split Flange Mounting Bolts		
Size	Pound-Inches	Newton metres
5/16-18	180 to 240	20 to 27
3/8-16	240 to 300	27 to 34
7/16-14	420 to 540	47 to 61
Size	Pound-Feet	Newton metres
1/2-13	55 to 65	74 to 88
5/8-11	140 to 150	190 to 203

PREVIEW - YOUFIXTHIS.COM

Download full manual at youfixthis.com

CYLINDER HEAD REMOVAL

STEP 1

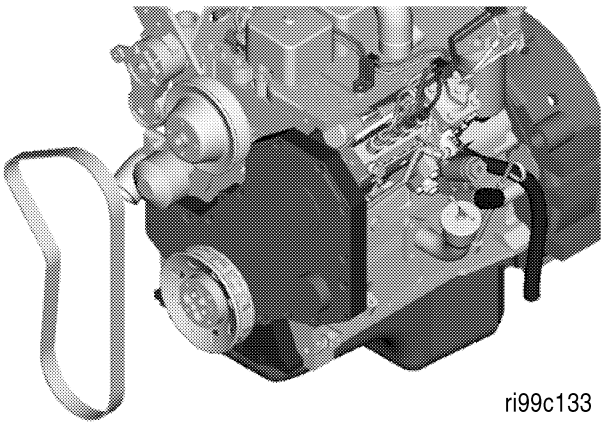

Lift the belt tensioner and remove the fan belt.

STEP 2

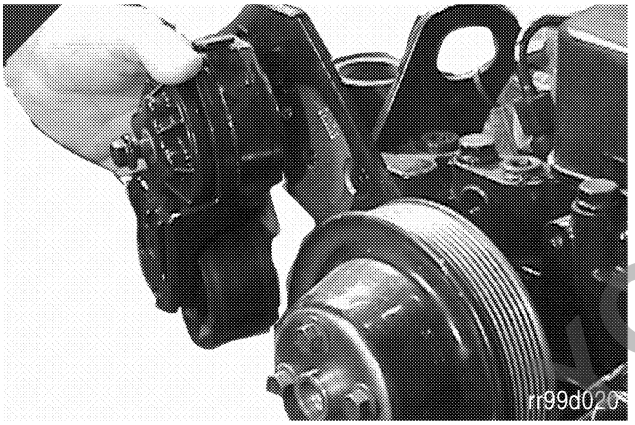

Remove the belt tensioner bolt and the belt tensioner.

STEP 3

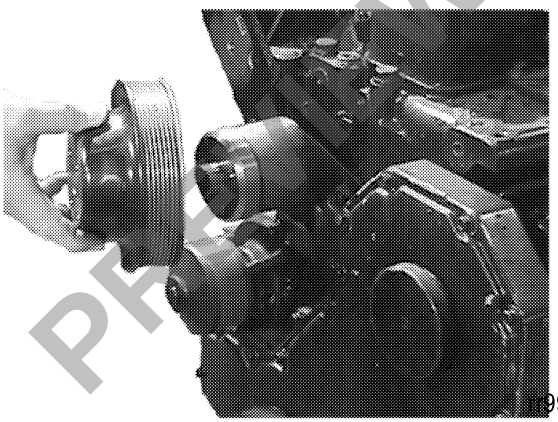

Remove the hub bolt and the fan hub.

STEP 4

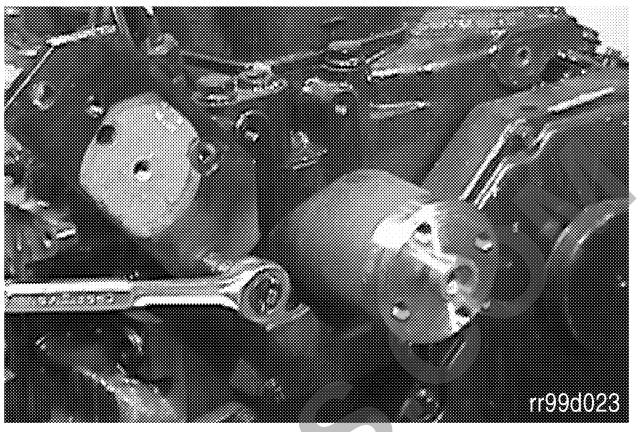

Remove the belt tensioner bolts and the bracket.

STEP 5

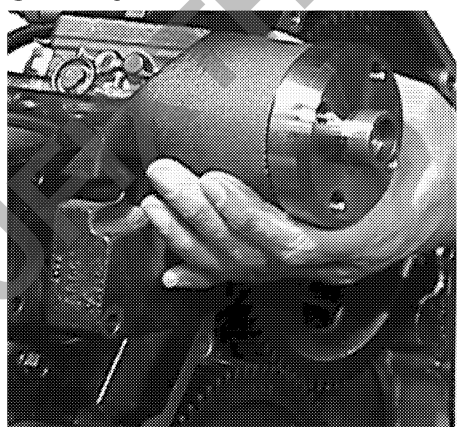

Remove the fan hub bracket bolts and the bracket.

STEP 6

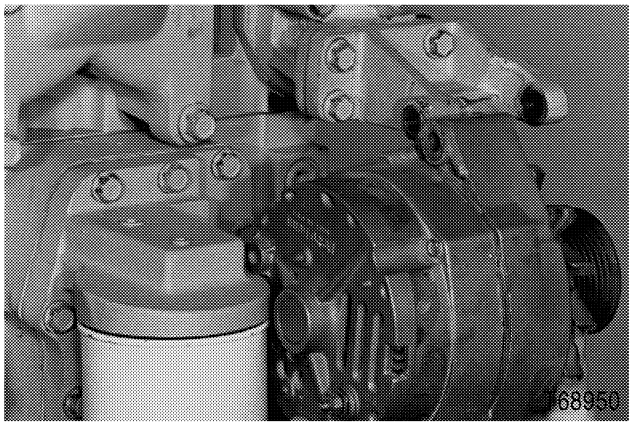

Remove the bolts that hold the alternator and remove the alternator.

PREVIEW - YOU FIX THIS

Download full manual at youfixthis.com

LOCTITE PRODUCT CHART

Product	Color	Similar Products	Gap (In Inches)	Strength (Steel/Steel)	Working Temperature Range-Farenheit	Fixture/Full Cure (Steel/Steel) Time	Primer	Description
518	Red	515	0.030	500psi	-65 to +300	1hr/24 hrs	764	Gasket Eliminator 518 for Aluminum
542	Brown	569	N/A	132/92 in lbs	-65 to +300	2 hr/24 hrs	747	Hydraulic Sealant
545	Purple		N/A	25/20 in lbs	-65 to +300	4 hr/24 hrs	747	Low Strength Pneumatic/Hydraulic Sealant
549	Orange	504	0.020	2500 psi	-65 to +300	2 hr/24 hrs	747	Instant Seal Plastic Gasket
554	Red	277	0.015	240/240 in lbs	-65 to +300	2 to 4 hrs/24 hrs	764	Refrigerant Sealant
567	White	592	N/A	500 psi	-65 to +400	4 hrs/24 hrs	764	Pipe Sealant for Stainless Steel
568	Orange	277	0.015	2500 psi	-65 to +300	12 hrs/24 hrs	764	Plastic Gasket
569	Brown	545	0.010	40/25 in lbs	-65 to +300	1 hr/24 hrs	764	Hydraulic Sealant
570	Brown	592	N/A	25/40 in lbs	-65 to +300	6 hrs/72 hrs	764	Steam Sealant
571	Brown	592	0.015	40/20 in lbs	-65 to +300	2 to 4 hrs/24 hrs	764	Pipe Sealant
572	White	578.575	N/A	80/27 in lbs	-65 to +300	24 hrs/72 hrs	None	Gasketing
592	White		0.020	500 psi	-65 to +400	4 hrs/72 hrs	736	Pipe Sealant with Teflon
593	Black		0.250	400 psi	-95 to +400	30 min/24 hrs	N/A	RTV Silicone
601	Green	609	0.005	3000 psi	-65 to +300	10 min/24 hrs	764	Current PIN #609
609	Green		0.005	3000 psi	-65 to +300	10 min/24 hrs	764	General Purpose Retaining Compound
620	Green	640	0.015	3000 psi	-65 to +450	30 min/24 hrs	747	High Temperature Retaining Compound
635	Green	680	0.010	4000 psi	-65 to +300	1 hr/24 hrs	747	High Strength Retaining Compound
638	Green	680	0.015	4100 psi	-65 to +300	10 min/24 hrs	747	High Strength Retaining Compound
640	Green	620	0.007	3000 psi	-65 to +400	1 hr/24 hrs	747	High Temperature Retaining Compound
660	Silver		0.020	3000 psi	-65 to +300	20 min/24 hrs	764	Quick Metal
675	Green	609	0.005	3000 psi	-65 to +300	20 min/24 hrs	747	General Purpose Retaining Compound
680	Green	635	0.015	4000 psi	-65 to +300	10 min/24 hrs	747	High Strength Retaining Compound
706	Clear	755	N/A	N/A	N/A	N/A	N/A	Cleaning Solvent
707	Amber		N/A	N/A	N/A	N/A	N/A	Activaltor for Structural Adhesives
736	Amber		N/A	N/A	N/A	N/A	N/A	Primer NF
738	Amber		N/A	N/A	N/A	N/A	N/A	Depend Activator
747	Yellow	N/A	N/A	N/A	N/A	N/A	N/A	Primer T
751	Clear		N/A	N/A	N/A	N/A	N/A	Activator for Structural Adhesives
755	Clear		N/A	N/A	N/A	N/A	N/A	Cleaning Solvent
764	Green		N/A	N/A	N/A	N/A	N/A	Primer N
767	Silver		N/A	N/A	-65 to +1600	N/A	N/A	Anti-Seize Lubricant

Printed in U.S.A.

PREVIEW - YOUFIXTHIS.COM

Download full manual at youfixthis.com

STEP 11

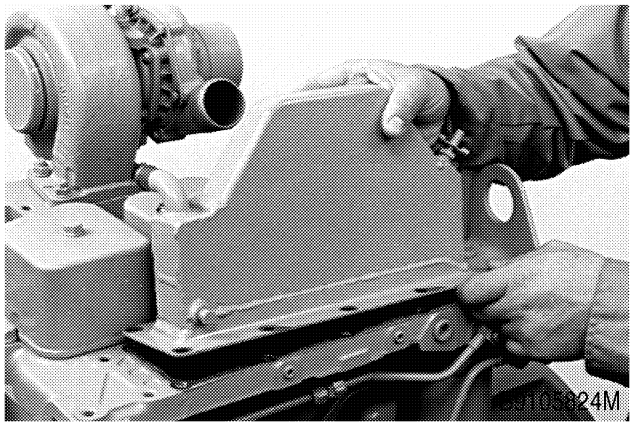

Remove the aftercooler.

STEP 12

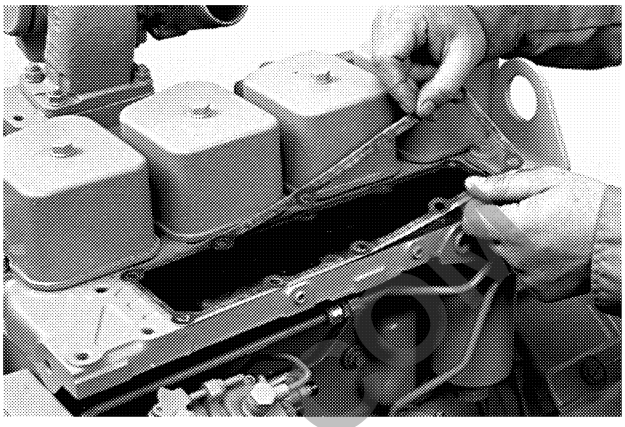

Remove the gasket and clean the mounting surface on the aftercooler and cylinder head of all foreign material.

NOTE: *During installation, apply a thin layer of Three Bond RTV Silver Sealer to both sides of a new gasket. Install the new gasket on the cylinder head.*

INSPECTING THE AFTERCOOLER

STEP 13

Inspect the aftercooler housing and core for damage. If there is any damage, the aftercooler must be replaced.

STEP 14



Check the core for leaks by closing off the bottom inlet tube. Attach regulated air pressure to the upper tube and pressurize the core to 483 kPa (70 PSI). Submerge the cooler in water and watch for air leakage. If leakage is noted, replace the aftercooler.

PREVIEW - YOUFIXTHIS.COM

Download full manual at youfixthis.com

45 Degree Exhaust Valve

THIS IS THE CORRECT SEAT CONTACT AREA ON THE VALVE.

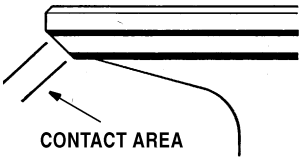

377L94D

THE CORRECT EXHAUST VALVE CONTACT AREA ON THE SEAT WILL GIVE A SEAT WIDTH OF 1.47 TO 2.07 mm.

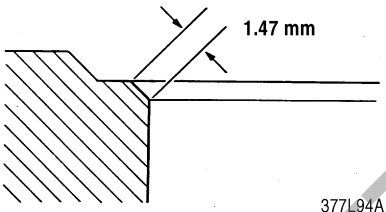

377L94A

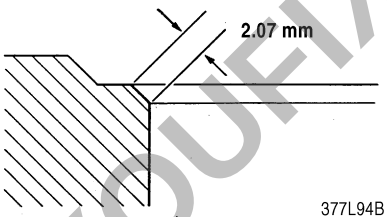

377L94B

1 DEGREE INTERFERENCE ANGLE

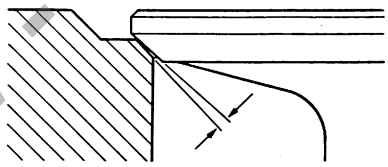

377L94C

CORRECT REFACING OF EXHAUST VALVES AND VALVE SEATS WILL GIVE A 1 DEGREE INTERFERENCE ANGLE. THIS ANGLE IS IMPORTANT BECAUSE THE ANGLE GIVES ASSISTANCE IN CUTTING CARBON AND TO SEAT THE VALVES.

IF THE VALVE HEAD IS RECESSED MORE THAN 1.5 mm, REPLACE THE VALVE AND INSTALL A VALVE SEAT.

PREVIEW - YOUFIXTHIS.COM

Download full manual at youfixthis.com

CAMSHAFT

ID of Bushing Installed	54.107 to 54.133 mm
Maximum Service Limit	54.146 mm
ID of Camshaft Bore	54.089 to 54.139 mm
Maximum Service Limit	54.164
OD of Each Camshaft Bearing Surface	53.987 to 54.013
Minimum Service Limit	53.962 mm
Camshaft Thrust Clearance	0.130 to 0.340 mm
Minimum Service Limit	0.470mm
Cam Lobe Minimum Diameter At Peak	
Intake	47.265 mm
Exhaust	46.994 mm
Total Lift with Push Rod - Intake	
New	6.447 mm
Worn	6.146 mm
Total Lift with Push Rod - Exhaust	
New	6.735 mm
Worn	6.434 mm

GEAR TRAIN BACKLASH

Crankshaft Gear to Camshaft Gear	0.08 to 0.33 mm
Maximum Service Limit (All Gears)	0.45 mm

PREVIEW - YOUFIXTHIS.COM

Download full manual at youfixthis.com

STEP 103

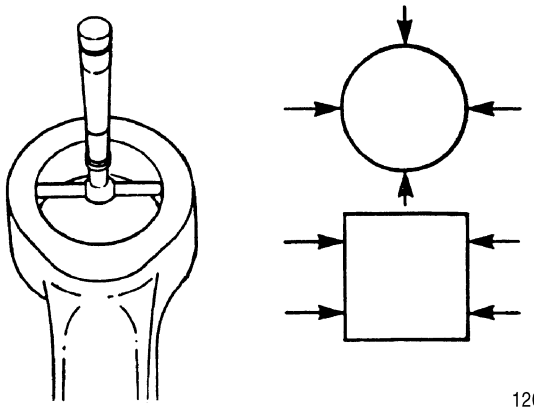

120L96B

Measure the connecting rod bushing pin bore with the bushing removed. The bore diameter must be 48.988 to 49.012 mm. If the rod pin bore is not within specifications, the connecting rod and cap must be replaced.

STEP 104

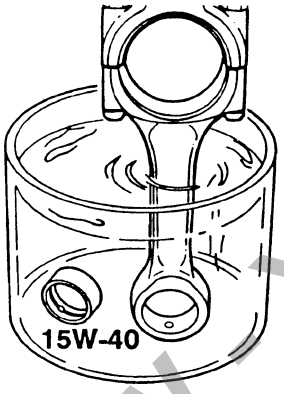

120L96C

Put the connecting rod pin end and new bushing in clean 15W-40 engine oil.

STEP 105



121L96A

Place the connecting rod bushing on the mandrel.

STEP 106

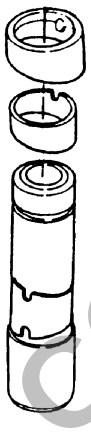

121L96B

Place the knock out ring (thin) inside the driver ring. Match the angles and place the angle side down. Align the notch of the knock out ring (thin) to the pin in the driver ring and slide onto the mandrel.

STEP 107

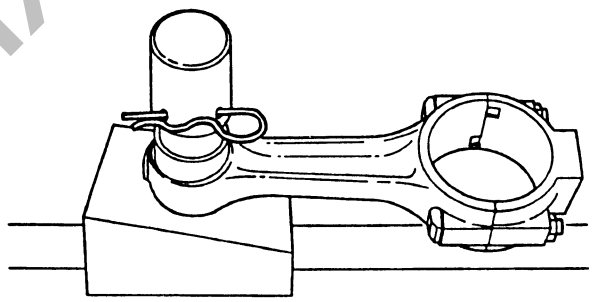

121L96C

Install the cap and secure with the hair pin.

STEP 108

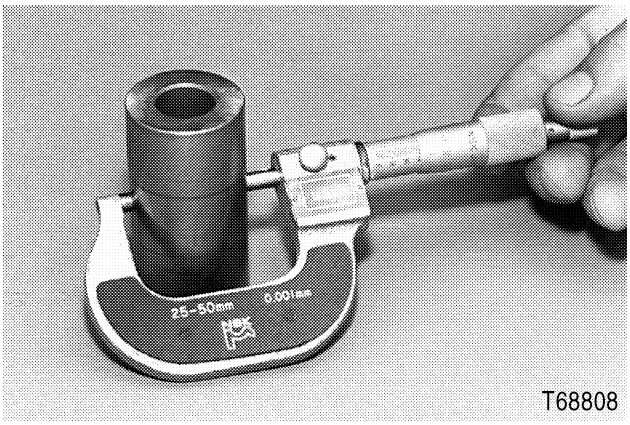

Measure the diameter of the piston pin. If the diameter is less than 39.990 mm the piston pin must be replaced.

PREVIEW - YOUFIXTHIS.COM
Download full manual at youfixthis.com

CAMSHAFT
Removal

STEP 236

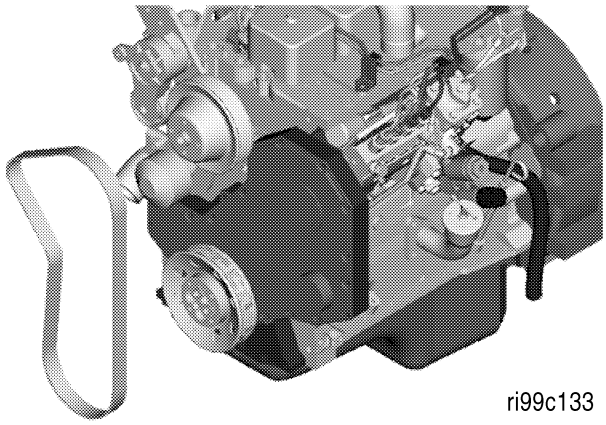

Lift the belt tensioner and remove the fan belt.

STEP 237

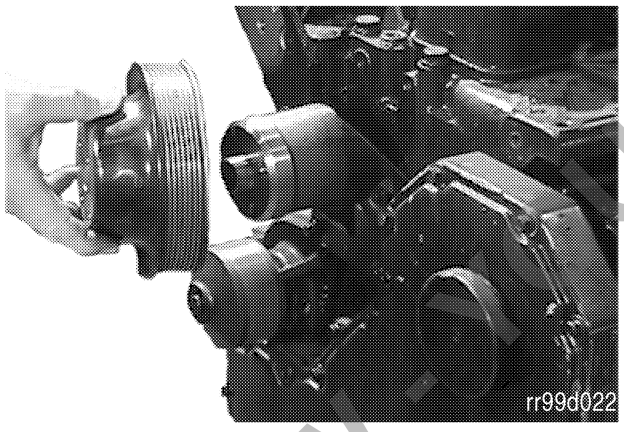

Remove the fan pulley bolts and the fan pulley.

STEP 238

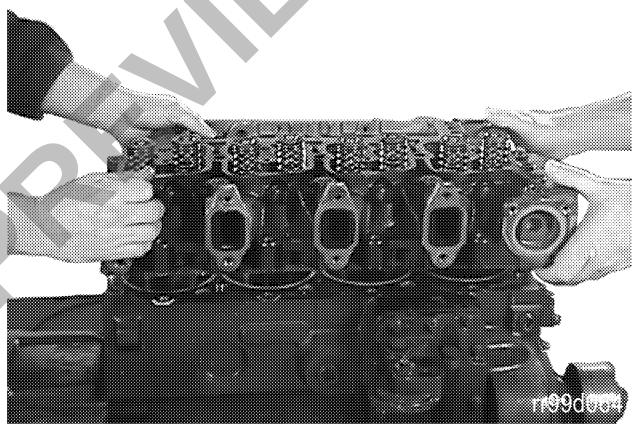

Remove the cylinder head. See Section 2415 for cylinder head removal.

STEP 239

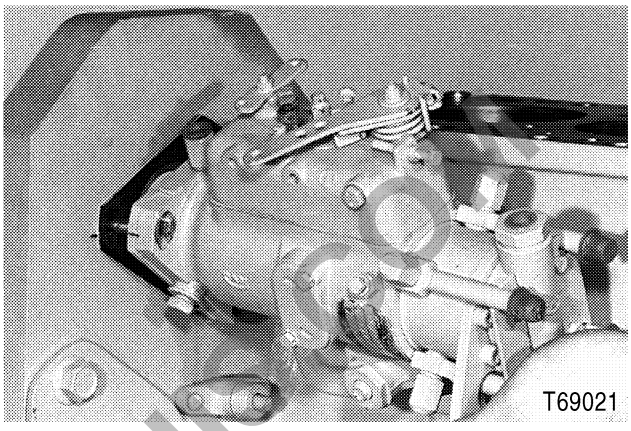

Disconnect the fuel lines and remove the injection pump. See Section 3414 for CAV injection pumps, Section 3416 for Bosch 'A' injection pumps, and Section 3415 for Bosch 'VE' injection pumps in the service manual.

STEP 240

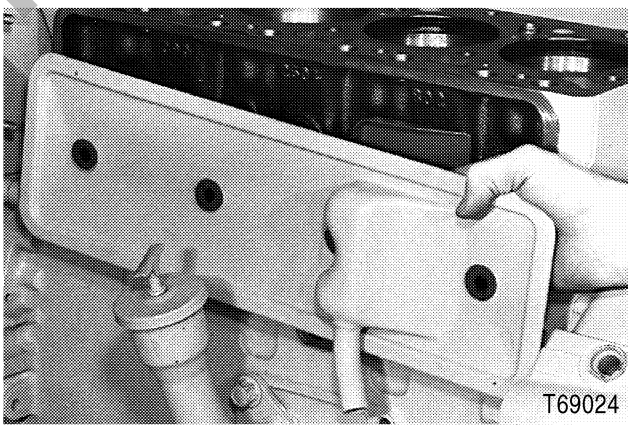

Remove the bolts, lifter cover and breather cover.

STEP 241

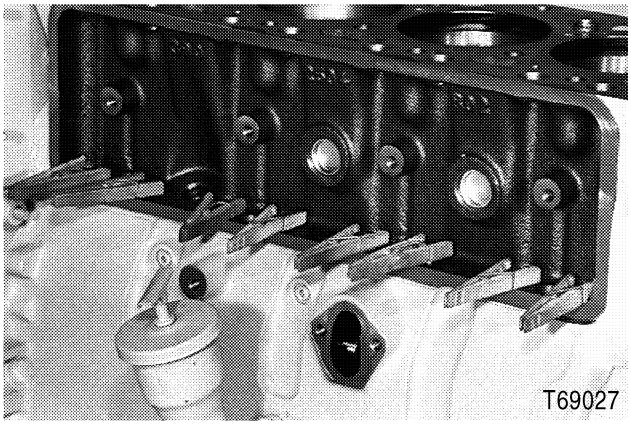

Raise the lifters and install pins to hold up the lifters.

PREVIEW - YOUFIXTHIS.COM
Download full manual at youfixthis.com

SPECIAL TORQUES

Oil Pump Retaining Bolts	21 to 27 Nm
Front Cover Retaining Bolts	21 to 27 Nm
Crankshaft Pulley Retaining Bolts	120 to 130 Nm
Fan Pulley Bracket Retaining Bolts	23 to 25 Nm
Fan Pulley Bolts	
Grade 8.8 Size M8	25 to 31 Nm
Grade 10.9 Size M8	37 to 43 Nm
Grade 8.8 Size M10	51 to 62 Nm
Grade 10.9 Size M10	51 to 62 Nm
Filter Housing Retaining Bolts	21 to 27 Nm
Oil Inlet Tube Retaining Bolts	18 to 30 Nm
Oil Pan Drain Plug	68 to 82 Nm

LUBE FLOW CHART

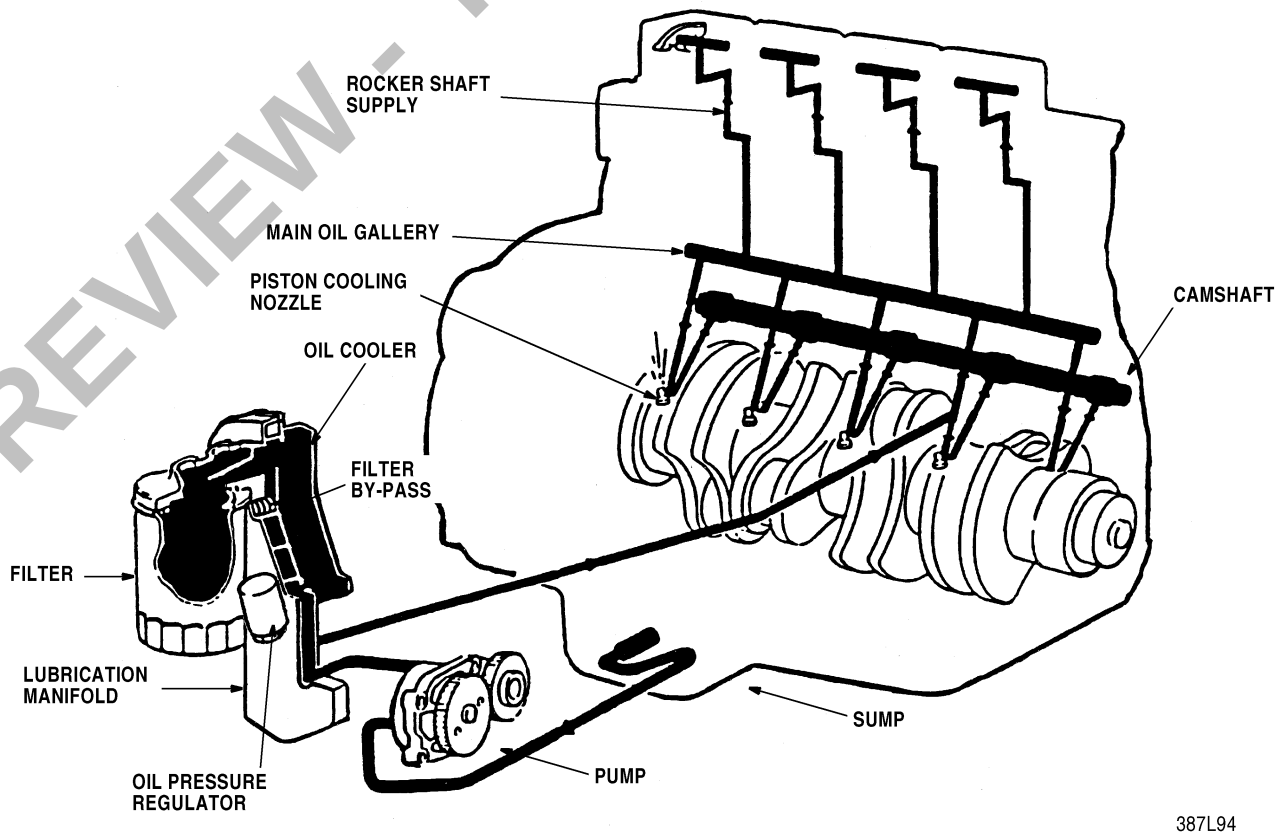

387L94

PREVIEW - YOUFIXTHIS.COM
Download full manual at youfixthis.com

SAFETY RULES

WARNING: *THIS SAFETY ALERT SYMBOL INDICATES IMPORTANT SAFETY MESSAGES IN THIS MANUAL. WHEN YOU SEE THIS SYMBOL, CAREFULLY READ THE MESSAGE THAT FOLLOWS AND BE ALERT TO THE POSSIBILITY OF PERSONAL INJURY OR DEATH.* M171B

WARNING: *Add coolant to the radiator only when the engine is stopped or slowly idling. To avoid being scaled when the pressure-type filler cap is being removed, turn the cap slowly to the first stop position to relieve pressure before removing the cap.* M346

To remove the system pressure, slowly turn the radiator cap counterclockwise to the FIRST stop. This will permit a gradual release of pressure with little coolant loss.

Never put coolant in a hot engine. The engine block or cylinder head can get cracks because of the difference in temperature between the metal and coolant.

HOW TO CLEAN THE COOLING SYSTEM

Clean the cooling system a minimum of once each year. In areas where the water has minerals, clean the system more frequently.

1. When the coolant is hot, open the radiator and engine block drain valves. Close the valves after the system is empty.
2. Add a radiator cleaner and fill the system with clean water. Use a good type of radiator cleaner. Follow the instructions given with the radiator cleaner.
3. Drain the radiator cleaner solution and flush the system with clean water. Fill the system with antifreeze and water and check the hoses, radiator and water pump for leaks.

NOTE: *After the cooling system is completely filled, run the engine for approximately 20 minutes to remove air from the cooling system. Check coolant level and add coolant if necessary.*

NOTE: *If the engine is equipped with an aftercooler, open the air bleed to remove trapped air.*

SPECIAL TORQUES

Water Pump Housing Bolt	21 to 27 Nm
Thermostat Housing Bolts	21 to 27 Nm
Inlet Manifold Bolts	39 to 47 Nm
Fan Pulley Bracket Bolts	23 to 25 Nm
Fan Pulley Bolts	
Grade 8.8 Size M8	26 to 31 Nm
Grade 10.9 Size M8	37 to 43 Nm
Grade 8.8 Size M10	51 to 62 Nm
Grade 10.9 Size M10	51 to 62 Nm
Belt Tensioner Bracket Bolts	21 to 27 Nm
Belt Tensioner Bolt	39 to 47 Nm

SPECIFICATIONS

Belt Tension	
Spring Tension at 35 Degree Angle (Minimum)	24 Nm

PREVIEW - YOUFIXTHIS.COM
Download full manual at youfixthis.com

STEP 55

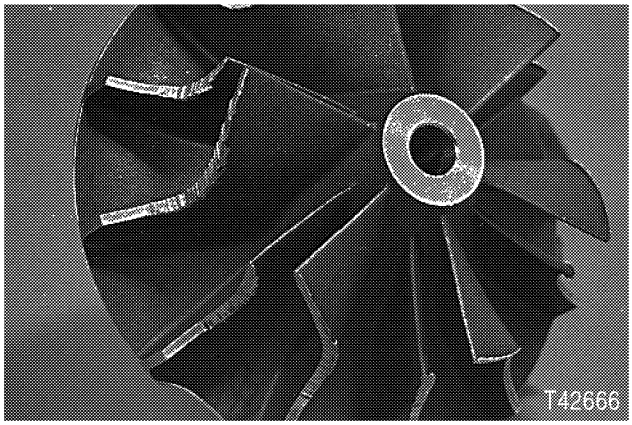

Inspect the compressor wheel for bent blades and scratches. Replace the turbocharger if the wheel shows damage.

STEP 56

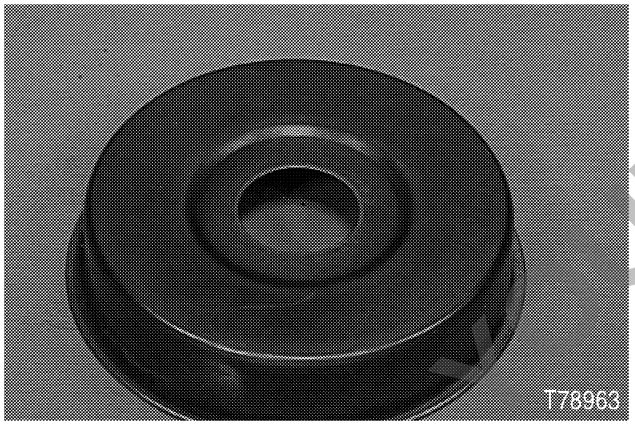

Replace the turbocharger if the heat shield shows damage.

STEP 57

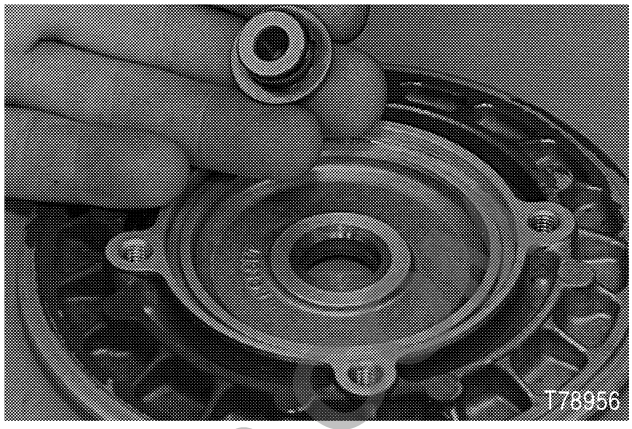

Replace the turbocharger if the oil slinger shows damage.

STEP 58

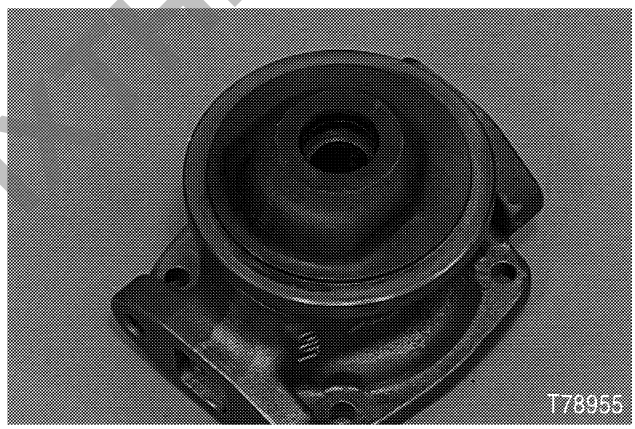

Inspect the center housing bearing surfaces for scoring or scratches. Replace the turbocharger if there is damage.

PREVIEW - YOUFIXTHIS.COM

Download full manual at youfixthis.com

Assembly

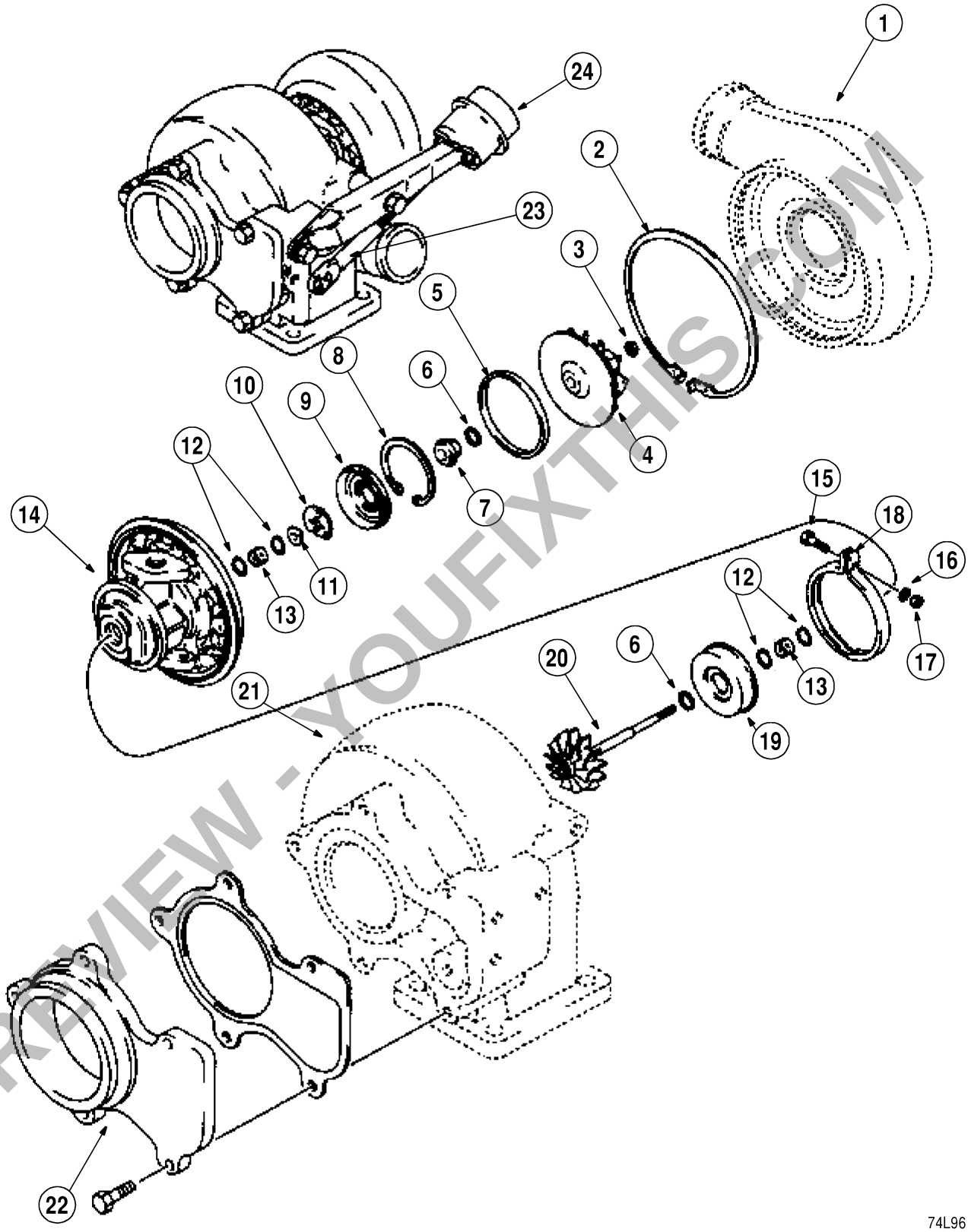

74L96

1. COMPRESSOR HOUSING
2. RETAINING RING
3. LOCK NUT
4. COMPRESSOR IMPELLER
5. O-RING SEAL
6. SPLIT RING SEAL
7. OIL SLINGER
8. RETAINING RING
9. OIL SEAL PLATE
10. THRUST BEARING
11. THRUST COLLAR
12. RETAINING RING
13. BEARING
14. BEARING HOUSING
15. HEX BOLT
16. FLAT WASHER
17. HEX NUT
18. V-BAND CLAMP
19. HEAT SHIELD
20. WHEEL AND SHAFT
21. TURBINE HOUSING
22. ADAPTOR
23. ADJUSTING LINK
24. ACTUATOR CANISTER

PREVIEW - YOUFIXTHIS.COM
Download full manual at youfixthis.com

Nozzle Gaskets

	Description	Notes
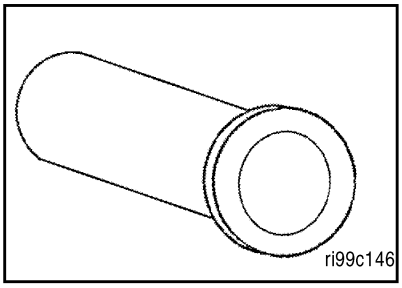	Injector Sleeve/Seal	Use on pre-1991 engines with pre-1991 cylinder heads. Use sleeve/seal with 7 mm tip injectors in 9 mm bore cylinder head.
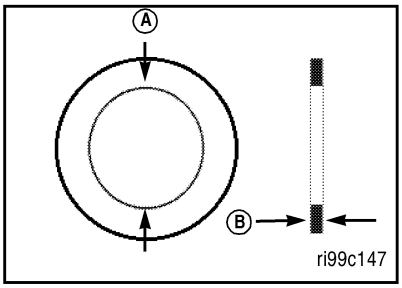	0.50 mm Gasket	**Dim. A: 7.2 to 7.3 mm** **Dim. B: 0.50 mm**
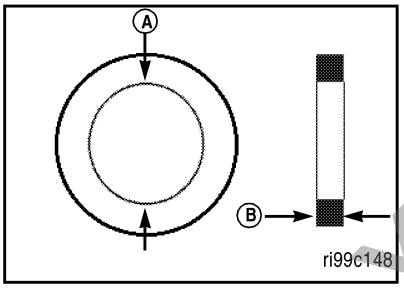	1.50 mm Gasket	**Dim. A: 7.2 to 7.3 mm** **Dim. B: 1.50 mm**
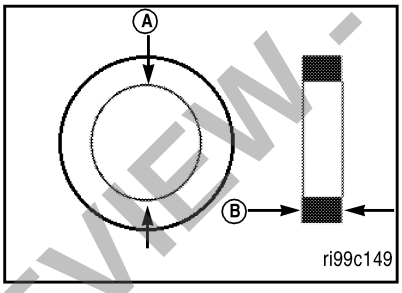	2.50 mm Gasket	**Dim. A: 7.2 to 7.3 mm** **Dim. B: 2.50 mm**

PREVIEW - YOUFIXTHIS.COM

Download full manual at youfixthis.com

STEP 44

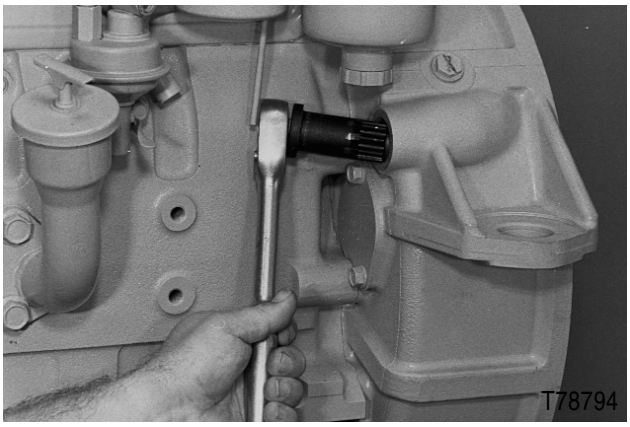

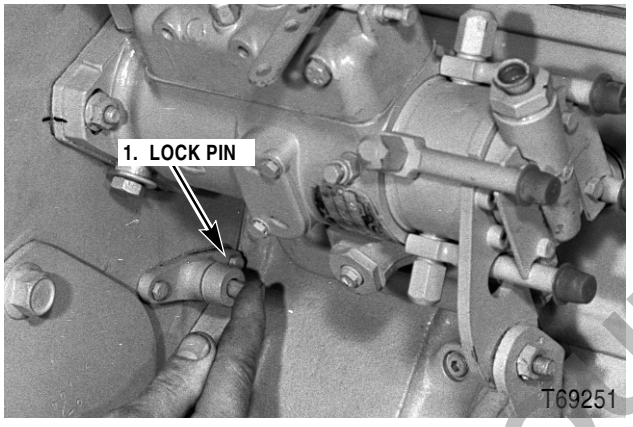

Install the engine turn over tool, CAS 1691, push in on the lock pin and turn the engine over until the lock pin engages in the camshaft gear.

STEP 45

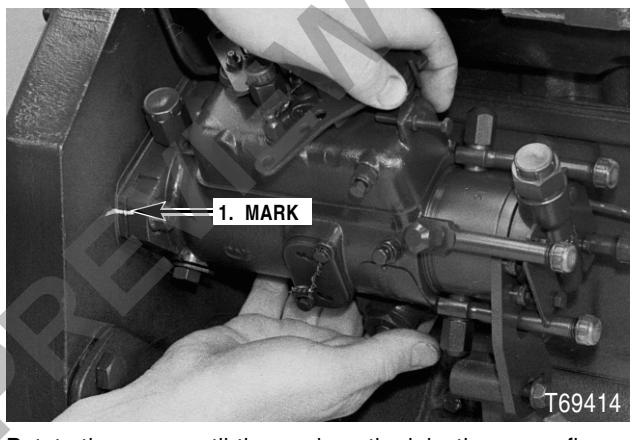

Rotate the pump until the mark on the injection pump flange and the mark on the front cover are aligned.

STEP 46

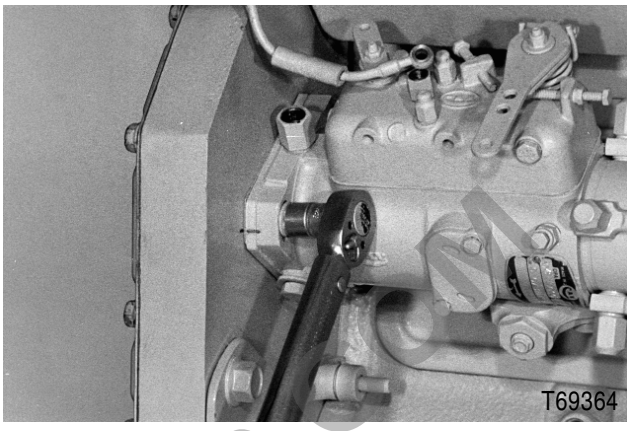

Tighten the injection pump mounting bolts and bracket bolts to a torque of 21 to 27 Nm.

STEP 47

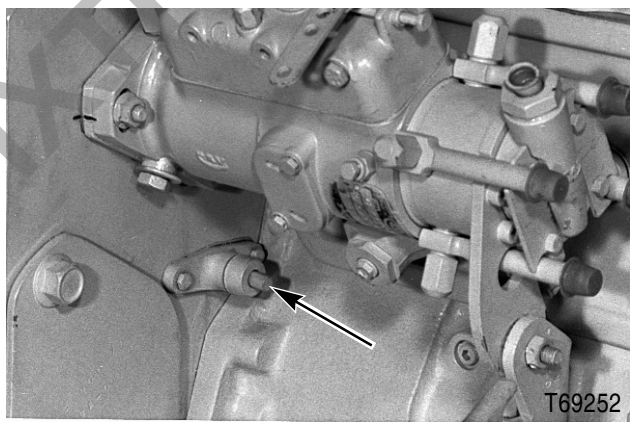

Pull out the lock pin from the camshaft gear.

STEP 48

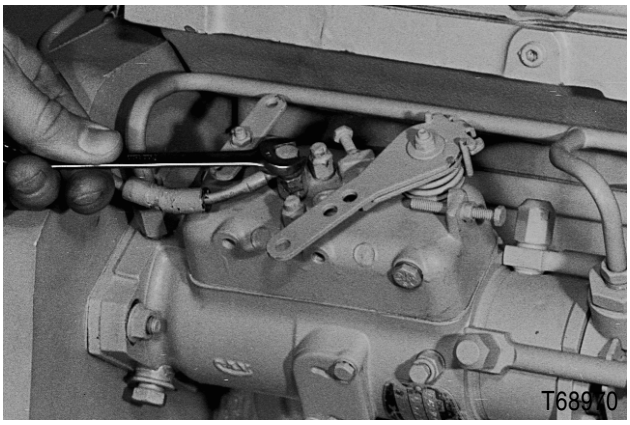

Connect and tighten the fuel leak off tube.

PREVIEW - YOUFIXTHIS.COM

Download full manual at youfixthis.com

PREVIEW ONLY

You're viewing 18 of 342 pages

The full manual includes:

- All 342 pages, complete
- Searchable PDF (find any keyword)
- No watermarks
- Instant download
- Print-ready quality

GET FULL MANUAL NOW

Case 4-390, 4T-390, 4TA-390 Service Manual

Scan or click anywhere
youfixthis.com

Click anywhere on this page to get the full manual