SHOP MANUAL
CASE/INTERNATIONAL

MODELS 5120, 5130 & 5140

IDENTIFICATION

Tractor model number and identification serial number are located on a plate on lower left side of instrument panel cover on tractors equipped with a cab or lower left front side of operator's platform on tractors equipped with a ROPS frame. Engine serial number is located on a plate on left side of timing gear housing. Transmission serial number is located on a plate on right side of transmission housing. On models equipped with mechanical front-wheel-drive axle, the axle serial number is located on a plate on right rear side of front axle housing.

INDEX (By Starting Paragraph)

	Models 5120	5130	5140
AFTERCOOLER	75	....	....
AIR CLEANER	76	76	76
AXLE, FRONT (TWO-WHEEL DRIVE)			
Axle Main Member	4	4	4
Steering Knuckles	2	2	2
Tie Rod & Toe-In	3	3	3
Wheel Bearings	1	1	1
AXLE, FRONT (FOUR-WHEEL DRIVE)			
Axle Assembly, R&R	5	5	5
Differential & Bevel Gears	8	8	8
Drive Shaft	9	9	9
Front Drive Clutch	11	11	11
Pivot Housing & Axle Shaft	7	7	7
Tie Rods & Toe-In	10	10	10
Wheel Hub & Planetary	6	6	6
BRAKE (PARKING)	133	133	133
BRAKES (WHEEL)			
Adjustment	126	126	126
Bleed Brakes	130	130	130
Brake Assemblies	131	131	131
Master Cylinders	132	132	132
CAB AND SEAT	170	170	170
COOLING SYSTEM			
Belt Tensioner	81	81	81

PREVIEW - YOUFIXTHIS.COM

Download full manual at youfixthis.com

INDEX (CONT.)

	Models 5120	5130	5140
RANGE TRANSMISSION & FORWARD-REVERSE SHUTTLE TRANSMISSION			
Inching Pedal & Transmission Linkage Adjustment	115	115	115
Forward-Reverse Shuttle Valve	113	113	113
Operation	111	111	111
R&R and Overhaul	112	112	112
SYNCHROMESH TRANSMISSION			
Operation	109	109	109
R&R and Overhaul	110	110	110
TORQUE LIMITER CLUTCH			
R&R and Overhaul	103	103	103
TURBOCHARGER	72	....	72

CONDENSED SERVICE DATA

	Models 5120	5130	5140
GENERAL			
Engine Make	Own		
Number of Cylinders	4	6	6
Bore	102 mm (4.02 in.)	102 mm (4.02 in.)	102 mm (4.02 in.)
Stroke	120 mm (4.72 in.)	120 mm (4.72 in.)	120 mm (4.72 in.)
Displacement	3.92 L (239 cu. in.)	5.88 L (359 cu. in.)	5.88 L (359 cu. in.)
Compression Ratio	16.5:1	17:1	17.5:1
Electrical System	12 volts, negative ground		
Speed Selection	16 forward, 12 reverse		
TUNE-UP			
Firing Order	1-3-4-2	1-5-3-6-2-4	1-5-3-6-2-4
Rocker Arm-to-Valve Clearance (Cold)—			
Intake	0.25 mm (0.010 in.)		
Exhaust	0.50 mm (0.020 in.)		
Injection Timing	Paragraph 61	Paragraph 60	Paragraph 61
Injector Opening Pressure	24,500-25,305 kPa (3553-3670 psi)		
Engine Low Idle	900 rpm		
Engine High Idle (No-Load)	2400 rpm		

PREVIEW - YOUFIXTHIS.COM

Download full manual at youfixthis.com

CONDENSED SERVICE DATA (CONT.)

	Models 5120	5130	5140
TUNE-UP (Cont.)			
Engine Rated Speed (Loaded)		2200 rpm	
SIZES AND CLEARANCES			
Crankshaft Main Journal Diameter		82.987-83.013 mm (3.2672-3.2682 in.)	
Main Bearing Diametral Clearance		0.041-0.119 mm (0.0016-0.0046 in.)	
Crankshaft End Play		0.137-0.264 mm (0.005-0.010 in.)	
Crankshaft Crankpin Diameter		68.987-69.013 mm (2.706-2.717 in.)	
Rod Bearing Diametral Clearance		0.038-0.116 mm (0.0015-0.0045 in.)	
Connecting Rod Side Clearance		0.1-0.3 mm (0.004-0.012 in.)	
Camshaft Journal Diameter		53.987-54.013 mm (2.125-2.126 in.)	
Camshaft Diametral Clearance		0.076-0.15 mm (0.003-0.006 in.)	
Camshaft End Play		0.13-0.47 mm (0.005-0.018 in.)	
Cylinder Bore		102.00-102.04 mm (4.016-4.017 in.)	
Piston Skirt Diameter		101.873-101.887 mm (4.010-4.011 in.)	
Piston Pin Diameter		39.997-40.003 mm (1.5747-1.5749 in.)	
Piston Pin Clearance in Piston		0.003-0.015 mm (0.0001-0.0006 in.)	
Piston Pin Clearance in Rod		0.051-076 mm (0.002-0.003 in.)	
Valve Stem Diameter— Intake and Exhaust		7.960-7.980 mm (0.313-0.314 in.)	
Valve Face Angle— Intake		29°	
Exhaust		44°	
Valve Seat Angle— Intake		30°	
Exhaust		45°	
CAPACITIES			
Cooling System—			
With Cab	17.6 L (18.6 U.S. Qt.)	20.8 L (22 U.S. Qt.)	20.8 L (22 U.S. Qt.)
Without Cab	15.7 L (16.6 U.S. Qt.)	18.9 L (20 U.S. Qt.)	18.9 L (20 U.S. Qt.)
Crankcase—			
With Filter	10.4 L (10.9 U.S. Qt.)	15 L (15.8 U.S. Qt.)	15 L (15.8 U.S. Qt.)

PREVIEW - YOUFIXTHIS.COM

Download full manual at youfixthis.com

distance "B" from rim to rim at hub height. Distance "A" at front of wheel rim should be equal to or up to 5.0 mm (0.197 in.) less than distance "B" at rear of wheel rim.

If toe-in is incorrect, loosen adjustment clamps, then rotate steering cylinder piston rod as required to increase or decrease toe-in. Retighten tie rod clamps.

FRONT DRIVE AXLE CLUTCH

All Models So Equipped

11. CLUTCH TORQUE TEST. To check the front drive clutch slip torque, remove front drive shaft and shield as outlined in paragraph 9. Install special adapter (CAS-2131) to rear yoke (2—Fig. 13) using "U" joint bolts. Tighten bolts to 29-32 ft.-lbs. (39-44 N•m). Have an assistant apply the service brakes and, using a torque multiplier (OEM-6107) and torque meter (OEM-6481), check torque required to turn the output shaft. Torque should be as follows:

New clutch	2100 N•m (1550 ft.-lbs.)
Used clutch	1260-1540 N•m (930-1135 ft.-lbs.)
Clutch with worn plates	1000 N•m or less (738 ft.-lbs. or less)

If clutch slips at a torque of 1000 N•m (738 ft.-lbs.) or less, remove and overhaul clutch as outlined in paragraph 12.

12. R&R AND OVERHAUL. To remove the clutch, tractor must be split between the speed and range transmissions as follows: Block front wheels securely. Install wood wedges between front axle housing and front support. Disconnect battery cables and drain transmission oil. Unbolt and remove seat assembly. Identify electrical connections and disconnect shuttle valve solenoids, pressure switches and ground leads. Disconnect and cap hydraulic lines as required. Disconnect the inching clutch cable and the park brake cable. Unbolt and remove left step assembly. Drain fuel tank and disconnect breather hose, return hose and fuel supply hose. Unbolt and remove fuel tank. Remove the bottom three bolts from transmission. Install transmission splitting rail (CAS-10853) under range transmission and install a suitable safety stand under speed transmission. Remove the right rear wheel. Install cab stands (CAS-3389) under cab frame. Disconnect pto cable, then remove cable and switch from the bracket. Unbolt and remove trailer electrical socket. Disconnect ground speed sensor connector and disconnect remote valve control rods. Disconnect and cap brake hoses. Unbolt and remove the shield, then disconnect the steering pressure switch connector, draft control solenoid connector and range switch connectors. Disconnect range selector rods and disconnect front-wheel drive solenoid connector. If so equipped, disconnect creeper transmission cable. Disconnect and cap hydraulic tubes from front-wheel drive valve and compensator valve. Raise the hood, remove exhaust extension and rear hood panel. Disconnect ground cables on both sides of cab. Remove rear cab mounting nuts and loosen front cab mounting bolts. Using the three cab support stands, raise cab. Remove speed to range transmission mounting bolts and carefully separate range transmission from speed transmission.

Remove clutch assembly from front of range transmission as follows: Remove cap screws (22—Fig. 15) and front shield (23). Remove snap ring (1), shims (2)

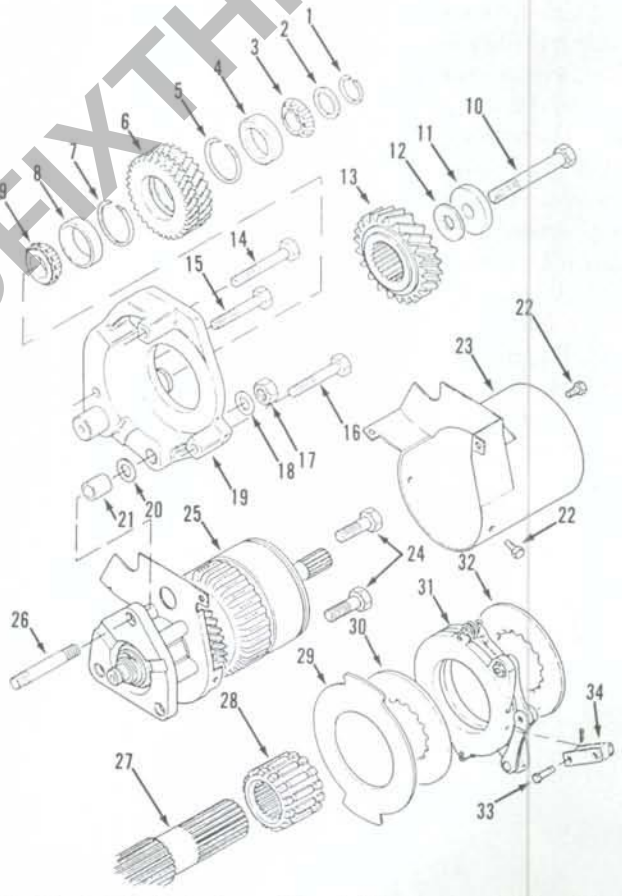

Fig. 15—Exploded view of front drive axle clutch, drive gears and components.

1. Snap ring
2. Shim
3. Bearing cone
4. Bearing cup
5. Snap ring
6. Idler gear
7. Snap ring
8. Bearing cup
9. Bearing cone
10. Cap screw
11. Spacer
12. Shim
13. Drive gear
14. Cap screw
15. Cap screw
16. Cap screw
17. Nut
18. Washer
19. Park brake housing
20. Shim
21. Dowel
22. Cap screws
23. Front shield
24. Cap screws
25. Clutch assy.
26. Stud
27. Bevel pinion shaft
28. Brake hub
29. Backing plate
30. Brake disc
31. Actuator assy.
32. Brake disc
33. Pin
34. Links

PREVIEW - YOUFIXTHIS.COM

Download full manual at youfixthis.com

FRONT DRIVE AXLE

All models are available with a front-wheel drive axle. Front drive axle can be engaged or disengaged with tractor on the go. Front drive axle is spring-clutch engaged and hydraulically disengaged. Tractor must be split between speed transmission and range transmission for access to the front-wheel drive clutch. Front drive axle differential unit is equipped with a limited slip differential.

DRIVE AXLE ASSEMBLY

All Models So Equipped

5. REMOVE AND REINSTALL. To remove the front drive axle assembly (7—Fig. 4), apply park brake and block rear wheels securely. If so equipped, remove front weights and weight bracket. Loosen front wheel lug nuts. Unbolt and remove front drive shaft and shield as outlined in paragraph 9. Disconnect steering hoses at cylinder. Cap or plug all openings immediately to prevent entrance of dirt into system. Place a floor jack under front axle and raise front of tractor. Support front of tractor with jack stands under side rails. Remove front wheel and tire assemblies. Remove locknut (4) and Allen set screw (3). Remove protective plug (1), then using a slide hammer and adapter (CAS-2014), pull pivot pin (2) from axle and front support. Remove shims (5) as pin is removed. Lower axle assembly and remove from under tractor.

Bushings (6) can now be removed using a suitable drift punch. Drive new bushings into bore of axle main member until flush to 1.6 mm (1/16 in.) below outer surface.

When reassembling, install axle assembly without shims (5). With axle main member pushed rearward against front support, measure distance between front of axle and front support. Subtract 0.1-0.3 mm (0.004-0.012 in.) from this measurement for total shim pack to be installed. Divide this shim pack and install half in front and half at rear of axle main member.

The balance of installation is the reverse order of removal, keeping the following points in mind. Tighten the Allen set screw and locknut (3 and 4) to a torque of 150 N·m (110 ft.-lbs.). Tighten wheel lug nuts to a torque of 185-220 N·m (137-162 ft.-lbs.). Tighten front weight bracket bolts to a torque of 610-730 N·m (450-540 ft.-lbs.).

Refer to paragraph 9 for installation of front drive shaft and shield.

WHEEL HUB AND PLANETARY

All Models So Equipped

6. R&R AND OVERHAUL. To remove either front wheel hub and planetary, loosen wheel lug nuts, then raise and support axle housing. Remove front wheel assembly. Rotate hub until oil plug (25—Fig. 5) is at bottom position. Remove plug and drain oil. Remove two screws (26) and locate the two special wheel studs (with collar). Install two nuts on each stud and lock them together. Unscrew and remove the special studs. Using large screwdrivers or pry bars, separate planetary carrier (20) from wheel hub (3). Remove three screws (29) and lift off cover (28). Number the carrier, planetary gears (16) and shafts (22) for aid in correct reassembly. Drive out roll pins (21) as shown in Fig. 6. Place outer edge of planetary carrier on blocks, then drive out shafts (22—Fig. 5). Remove and discard "O" rings (24). Remove planetary gears (16), washers (15 and 18) and bearing rollers (17).

Remove snap ring (14), sun gear (13), spacer (12) and thrust washer (11). Remove the eight cap screws (8) from ring gear carrier (6). Use four of the cap screws as jack screws in threaded holes in ring gear carrier and remove ring gear and carrier assembly. Remove retaining rings (5 and 9), then separate ring gear (10) from carrier (6). Remove outer bearing cone (4), wheel hub (3) and inner bearing cone (2). Remove oil seal (1) from hub, then drive bearing cups (2 and 4) from hub if necessary.

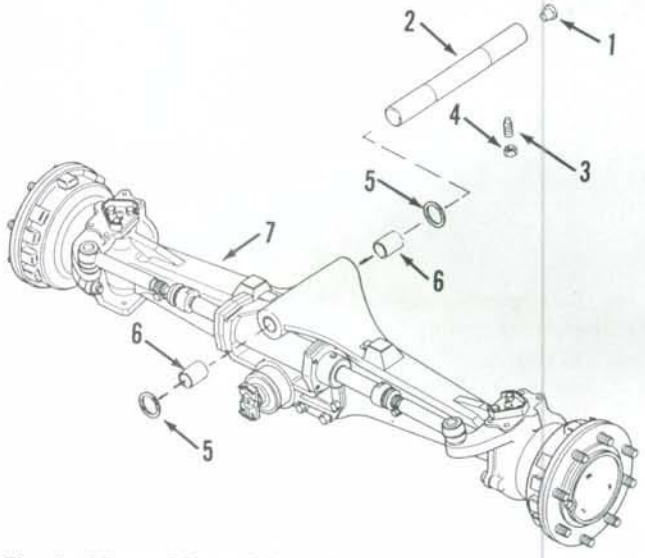

Fig. 4—View of front drive axle assembly removed from tractor.

1. Protective plug
2. Pivot pin
3. Allen set screw
4. Locknut
5. Shims
6. Pivot bushings
7. Axle assy.

PREVIEW - YOUFIXTHIS.COM

Download full manual at youfixthis.com

POWER STEERING SYSTEM

All models are equipped with hydrostatic power steering using a Danfoss steering unit. The variable displacement piston-type pump furnishes pressurized oil to the compensator valve where a portion of the oil is diverted to the steering unit at a pressure of 16,893-17,582 kPa (2450-2550 psi). One double-acting steering cylinder is used on all models.

FLUID, FILTER AND BLEEDING

All Models

13. The transmission and hydraulic system fluid is used in the power steering system. A dipstick, located at the right rear of the tractor rear housing, indicates fluid level. Use Hy-Tran Plus fluid in all models. Refer to CONDENSED SERVICE DATA for reservoir capacity and to HYDRAULIC SYSTEM SECTION for additional hydraulic system information. An externally mounted, screw-on-type pressure filter is located on the right side of speed transmission housing.

The manufacturer recommends that transmission and hydraulic fluid be drained and new Hy-Tran Plus fluid be installed after each 1000 hours of operation. Filter element (14—Fig. 19) should be changed whenever service monitor on instrument cluster indicates a clogged filter or at least once each 1000 hours of operation.

To change the filter element (14), use a strap wrench and rotate element counterclockwise to remove. Lubricate gasket (13) on new element with clean oil and install element on adapter (12) until gasket contacts filter manifold. Then, hand tighten element an additional one-third turn.

Start engine and check for leaks. To bleed the steering system, operate engine at low idle speed and rotate steering wheel from lock to lock several times until steering action is firm. Check transmission oil level and add Hy-Tran Plus oil as necessary.

TROUBLESHOOTING

All Models

14. Some troubles that may occur in the operation of the power steering system and their possible causes are as follows:

1. No power steering or steers slowly.
a. Binding mechanical linkage.
b. Excessive load on front wheels and/or air pressure low in front tires.
c. Steering cylinder piston seal faulty or cylinder damaged.
d. Faulty hand pump.
e. Faulty hydraulic supply pump.
f. Faulty priority valve in compensator valve assembly.

2. Will not steer manually.
a. Binding mechanical linkage.
b. Excessive load on front wheels and/or air pressure low in front tires.
c. Pumping element in hand pump faulty.
d. Faulty seal in steering cylinder or cylinder damaged.

3. Hard steering through complete cycle.
a. Low pressure from supply pump.
b. Internal or external leakage.
c. Faulty steering cylinder.

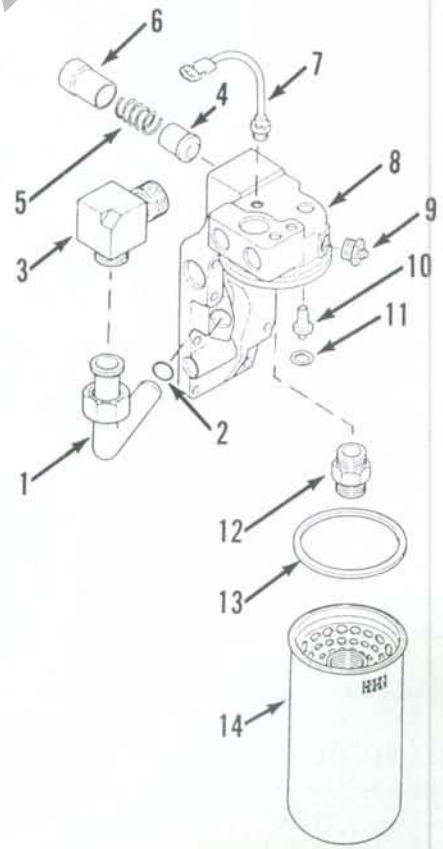

Fig. 19—Exploded view of hydraulic pressure filter and relative components.

1. By-pass tube
2. "O" ring
3. Elbow
4. Lube priority piston
5. Spring
6. Sleeve
7. Temperature switch
8. Filter manifold
9. Pressure switch
10. By-pass valve
11. Retaining ring
12. Adapter
13. Gasket
14. Filter element

PREVIEW - YOUFIXTHIS.COM

Download full manual at youfixthis.com

TROUBLESHOOTING

All Models So Equipped

105. If the Powershift transmission fails to shift properly, problems may be either hydraulic or electrical. If the amber Powershift indicator light (10—Fig. 86) comes ON during tractor operation, fully depress inching pedal for two seconds. The indicator light will flash. Count the number of flashes and check for electrical problems as follows:

ONE FLASH—The Powershift control module is receiving either no electrical signals or multiple electrical signals from Powershift shifter (Fig. 94). Could be caused by:
1. Wires shorted or faulty connections between control module and shifter assembly
2. Faulty shifter assembly

TWO FLASHES—Off-going pressure at the Powershift manifold not detected. Could be caused by:
1. Open in pressure switch circuit
2. Faulty pressure switch (stuck open)
3. Solenoid stuck in ON position

THREE FLASHES—The hydraulic oil temperature sensor circuit is open or shorted to ground. Could be caused by:
1. Faulty wiring or connections between temperature sensor and control module
2. Faulty temperature sensor
3. Faulty control module

FOUR FLASHES—Solenoid circuit is shorted to ground. Could be caused by:
1. Faulty wiring or connections between solenoid and control module
2. Faulty solenoid

FIVE FLASHES—On-coming pressure at the Powershift manifold not detected. Could be caused by:
1. Faulty pressure switch (stuck closed)
2. Pressure switch circuit shorted to ground
3. Open in solenoid circuit
4. Solenoid stuck in OFF position

SIX FLASHES—No clutch pressure or multiple clutch pressures. Could be caused by:
1. Pressure switch circuit shorted to ground
2. Faulty pressure switch (stuck closed)
3. Open circuit in one or more pressure switch circuits
4. One or more solenoids stuck in ON position
5. Faulty control module

Before testing for hydraulic faults, check the regulated pressure as follows: Remove the plug from test port on top of hydraulic pump compensator. Install fitting (CAS-2009-4) and a 4000 kPa (600 psi) test gauge. Operate engine until the hydraulic oil is heated to a temperature of 49° C (120° F). With engine speed at 1500 rpm, fully cycle the inching pedal. At this time, the regulated pressure must be 1800-2070 kPa (260-300 psi). Record the pressure reading and proceed as follows: Remove the plugs from the four test points on Powershift manifold (Fig. 95). Install four 4000 kPa (600 psi) pressure gauges, using extension tubes (CAS-2009-8). With hydraulic oil heated to 49° C (120° F) and engine operating at 1500 rpm, fully cycle inching pedal. Shift to each of the four gears and record gauge pressures. The pressure readings must be within 69 kPa (10 psi) of the previously recorded regulated pressure. Also, the differences between pressure readings for each gear must not vary more then 69 kPa (10 psi).

If pressure readings are not correct, check for the following possible causes:
1. Faulty clutch pack
2. Powershift spool damaged
3. Internal leakage in tubes, seals or shafts
4. Powershift manifold inlet screen plugged

POWERSHIFT MANIFOLD (CONTROL VALVE)

All Models So Equipped

106. R&R AND OVERHAUL. To remove the Powershift control valve (manifold), first disconnect battery cables, then remove batteries and battery box. Disconnect Powershift supply tube. Place identification tags on all electrical connectors to aid in correct reassembly. Disconnect the connectors and remove the ground wire. Remove the Powershift valve retaining bolts and lift off the control valve and gasket.

To disassemble the unit, remove nut (11—Fig. 97) and first "O" ring. Remove solenoid coil (10) and second "O" ring. Unscrew and remove valve spool (9) with "O" rings (8). Remove the other three solenoid valves in the same manner. Unscrew and remove the four pressure switches (5). Remove test port plugs (4) and inlet elbow (7) with "O" rings (3 and 6).

Clean and inspect all parts for damage. Using an ohmmeter, check resistance of solenoid coil. Reading should be 8 ohms. Check for continuity between pressure switch leads. The normally closed switch should show continuity. Solenoid coils (10), valve spools (9) and pressure switches (5) are not serviceable; renew faulty or damaged parts.

Using all new "O" rings and gasket (1), reassemble and reinstall by reversing the disassembly and removal procedures.

PREVIEW - YOUFIXTHIS.COM
Download full manual at youfixthis.com

stant, 109.75 mm (4.32 in.). Then, subtract the measurement etched on pinion shaft in millimeters from the previous sum to obtain the correct thickness of shims (8—Fig. 10) to be installed. Remove the special tool (CAS-1839) and bearing cones. Shims are available in ten thicknesses from 2.5-3.4 mm (0.098 to 0.134 in.).

Install the previously determined shim pack (8) on pinion shaft (7). Heat bearing (9) to a temperature of 80-90° C (175-195° F) and install on pinion shaft. Install collapsible spacer (12) on shaft, then install pinion shaft assembly in housing (11). Heat and install bearing cone (14) and install tab washer (15) and a new nut (16). Tighten nut only until shaft end play is removed. Use a cord wrapped around splined end of pinion shaft and a spring scale to measure the force required to rotate the pinion shaft. Bearing preload is correct when a spring scale reading of 92-137 N (20.7-30.8 lbs.) is obtained. Tighten pinion shaft nut until desired spring scale reading (bearing preload) is obtained. When preload is correct, use a hammer and small punch to stake edge of nut into slot on pinion shaft.

NOTE: If the pinion shaft nut is overtightened and the bearing preload exceeds 137 N (30.8 lbs.), disassemble the pinion shaft and install a new collapsible spacer (12). Then, repeat the bearing preload adjustment procedure.

Using Fig. 11 as a guide, reassemble ring gear and differential assembly. Soak all plates (4, 5 and 6) in clean SAE 85W-140 gear oil for 30 minutes prior to installing. Friction side of thrust plate (6) must face separator plate. Align match marks (applied during disassembly) on differential halves (3 and 12) and ring gear (13). Apply Loctite 270 to the cap screws (14), install and tighten cap screws to a torque of 78 N•m (57 ft.-lbs.). Heat bearing cones (2) to a temperature of 80-90° C (175-195° F), then install them on differential housing. Place bearing cups (1) on bearing cones (2) and install ring gear and differential assembly (5—Fig. 10) on pinion housing (11). Make sure bearing cups are seated and that ring gear is on drain plug side of housing. Install adjusting rings (4 and 6), bearing caps (3) and cap screws (1). Turn adjusting ring (4) until ring gear just touches pinion gear, then tighten adjusting ring (6) until ring becomes difficult to turn with special tool (CAS-1840B). Use a dial indicator against a ring gear tooth and check backlash between ring gear and pinion. Turn adjusting rings (4 and 6) equal amounts until 0.17-0.24 mm (0.007-0.009 in.) backlash is obtained. Check backlash at four equal positions around ring gear.

With backlash correctly set, wrap a cord around pinion shaft splines and attach a spring scale. Measure the force required to rotate the pinion shaft.

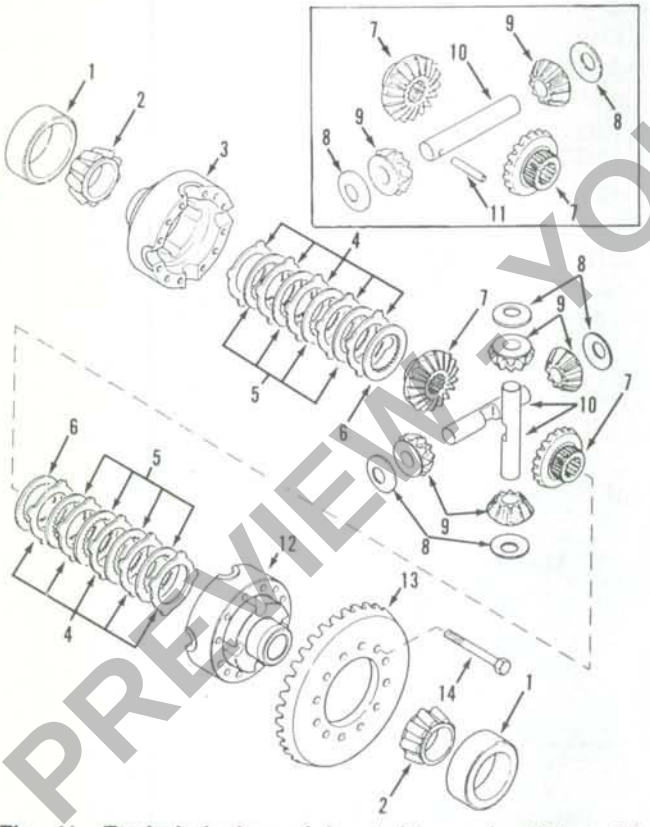

Fig. 11—Exploded view of front drive axle differential assembly. Two pinion differential (inset) is used on Model 5120.

1. Bearing cups
2. Bearing cones
3. Differential housing (left half)
4. Separator plates
5. Friction plates
6. Thrust plates
7. Side gears
8. Thrust washers
9. Differential pinions
10. Cross-pins
11. Pin
12. Differential housing (right half)
13. Ring gear
14. Cap screw

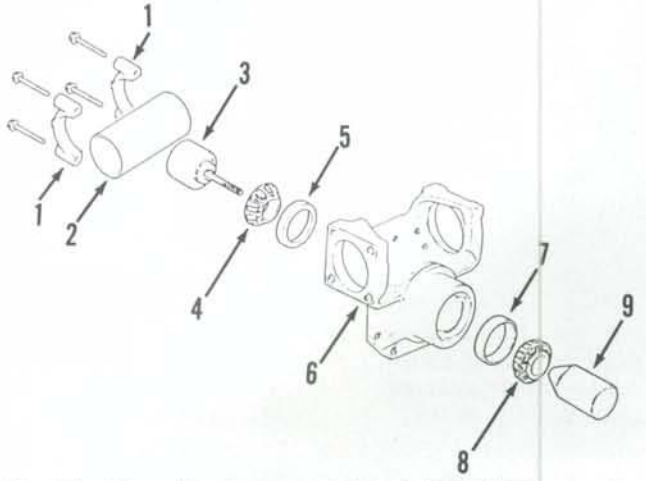

Fig. 12—View showing special tool (CAS-1839) used to determine drive pinion shaft shim thickness. Refer to text.

1. Bearing caps
2. Gauge tube
3. Gauge block
4. Bearing cone
5. Bearing cup
6. Pinion housing
7. Bearing cup
8. Bearing cone
9. Tool handle

PREVIEW - YOUFIXTHIS.COM

Download full manual at youfixthis.com

HYDRAULIC OIL TEMPERATURE SENSOR

All Models

107. The hydraulic oil temperature sensor is located in the hydraulic oil filter housing. Removal of the sensor is obvious after examination of the unit. Using an ohmmeter, check resistance of sensor against the temperatures shown in chart in Fig. 98. Renew sensor if it fails to meet the specifications.

POWERSHIFT UNIT

All Models So Equipped

108. R&R AND OVERHAUL. To remove the Powershift transmission, first split tractor between the engine and transmission housing as outlined in paragraph 103.

Disconnect lubrication lines and clutch supply lines from input shaft and drop shaft front bearing covers as shown in Fig. 99. Unbolt and remove access cover (just rearward from Powershift valve), then remove bolt, washer, any shims present and drive gear (Fig. 100) from rear of drop shaft. Unbolt and remove input shaft and drop shaft front bearing covers (1 and 2—Fig. 99) and shims. Remove the four retaining bolts, then lift out front bearing carrier plate (Fig. 101). Remove the input (top) shaft assembly and place on a clean bench. Lift out drop (lower) shaft assembly and place on bench.

To disassemble the input shaft, remove seal rings (43—Fig. 102) and bearing cone (42). Remove snap ring (13) from its groove in second gear clutch housing (3). Remove bearing cone (1), "O" ring (2) and second gear clutch housing (3). Place input shaft assembly in a press and, using special tool (CAS-1992) against piston (7), compress piston return spring (14). Remove snap ring (4), then release press. Remove piston

HYDRAULIC OIL TEMPERATURE		RESISTANCE (Ohms)
°C	°F	(±15%)
-17.8	0.0	1787
-12.2	10.0	1535
-6.7	20.0	1264
-3.9	25.0	1154
-1.1	30.0	1073
0.0	32.0	1066
4.4	40.0	905
10.0	50.0	790
15.6	60.0	677
21.1	70.0	595
26.7	80.0	521
32.2	90.0	444
37.8	100.0	390
43.3	110.0	344
48.9	120.0	298
54.4	130.0	265
65.5	150.0	209
76.7	170.0	166
87.8	190.0	135
98.9	210.0	112

Fig. 98—Chart used when checking hydraulic oil temperature sensor.

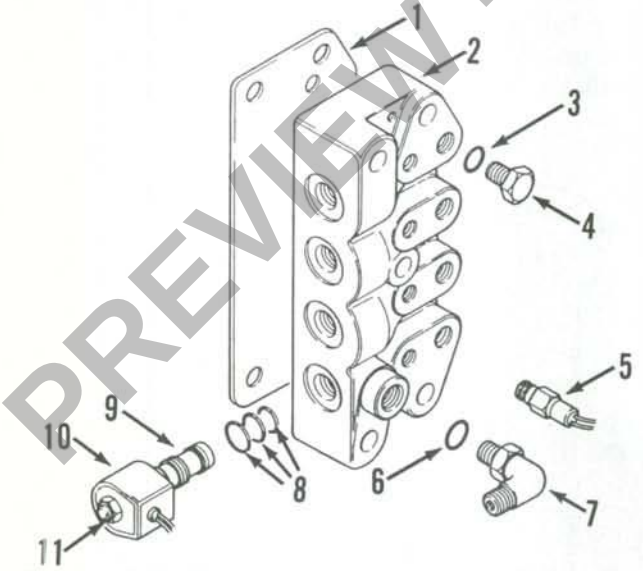

Fig. 97—Exploded view of Powershift control valve.

1. Gasket
2. Manifold
3. "O" ring
4. Test port plug (4)
5. Pressure switch (4)
6. "O" ring
7. Inlet elbow
8. "O" rings
9. Valve spool (4)
10. Solenoid coil (4)
11. Nut

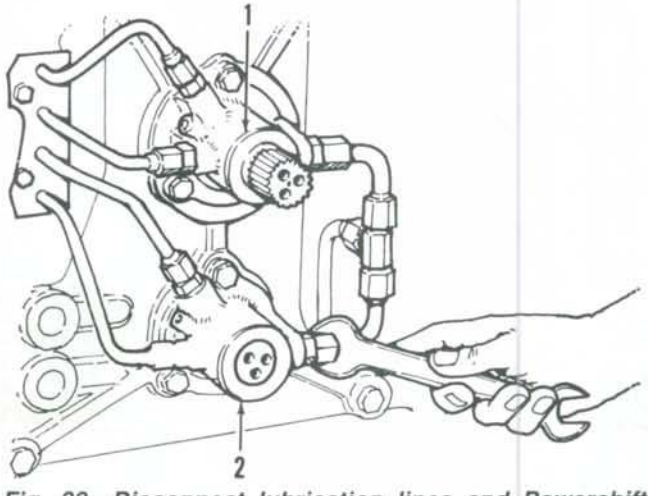

Fig. 99—Disconnect lubrication lines and Powershift clutch lines from input shaft front bearing cover (1) and drop shaft front bearing cover (2) as shown.

PREVIEW - YOUFIXTHIS.COM

Download full manual at youfixthis.com

66. REMOVE AND REINSTALL. Clean the area around the injectors. Unbolt injection lines bracket. Loosen injection line tube nut at pump, then disconnect line from injector. Unbolt leak-off line from injector. Cap or plug all openings. Using special tool (CAS-1066A) on injector nut (1—Fig. 68) and a wrench on the flat surfaces of injector body (2) to prevent injector from turning, unscrew nut and remove injector.

Make certain that injector seal (9) is removed with injector. If not, use suitable tool or wire to remove the seal from the bore. Remove the remaining injectors using the same procedure. Clean bores for injectors using special tool (CAS-1694) for 9 mm injectors or (CAS-2155) for 7 mm injectors.

Using a small amount of petroleum jelly to hold a new seal (9) in place, reinstall injector. The ball in the injector must align with the slot in the bore. Tighten injector nut (1) to a torque of 60 N•m (44 ft.-lbs.). Install leak-off line and tighten bolt to a torque of 8 N•m (6 ft.-lbs.). Install and tighten injection lines.

Start engine. If engine fails to start, loosen injection line nuts at injectors. Turn ignition switch on and crank engine until diesel fuel leaks at loosened connections. Tighten line nuts and start engine.

67. TESTING. A complete job of testing and adjusting an injector nozzle requires use of special test equipment, such as test stand (CAS-10091) shown in Fig. 69. Only clean diesel fuel or approved testing oil should be used in tester tank. The nozzle should be tested for opening pressure, seat leakage and spray pattern. When tested, nozzle should open with a sharp popping or buzzing sound and cut off quickly at end of injection with a minimum of seat leakage and a controlled amount of back leakage. Check as outlined in the following paragraphs.

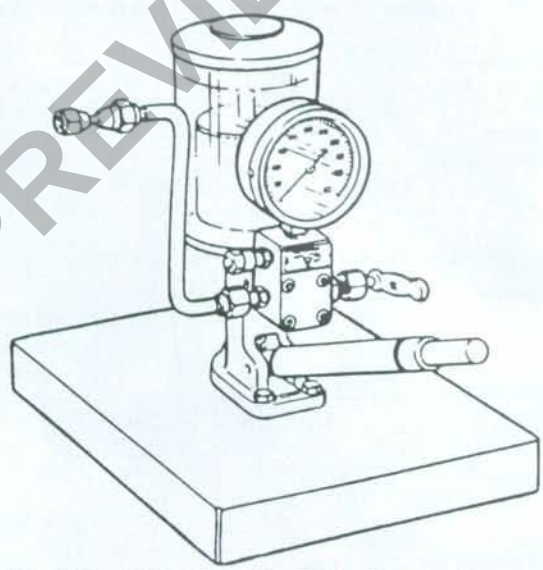

Fig. 69—CAS-10091 diesel fuel injection nozzle tester.

WARNING: Fuel leaves nozzle tip with sufficient force to penetrate the skin. Keep hands away from nozzle tip when testing.

68. OPENING PRESSURE. Before conducting test, operate tester until fuel flows, then attach injector to tester using correct adapter. Close valve to tester gauge and pump tester lever a few quick strokes to be sure that nozzle is not plugged and that all four spray holes are open.

Open valve to tester gauge and operate tester until fuel flows, then observe gauge reading. Opening pressure should be 24,500-25,305 kPa (3553-3670 psi). If opening pressure is not a specified, disassemble injector as outlined in paragraph 71 and vary shims (3—Fig. 68) as required. Shims are available in thirty thicknesses ranging from 1.0 mm (0.039 in.) to 1.98 mm (0.078 in.). The opening pressure is changed about 380 kPa (55 psi) for each 0.025 mm (0.001 in.) of shim thickness that is added or removed.

NOTE: When testing all the injectors in an engine, there must not be more than 1035 kPa (150 psi) difference between any of the injectors.

69. SPRAY PATTERN. Close the valve to tester gauge and operate tester handle at approximately 60 strokes per minute. Four finely atomized conical sprays should be emitted from injector tip. If spray is solid, streaked or irregular, disassemble and overhaul injector as outlined in paragraph 71.

70. SEAT LEAKAGE. Point injector tip downward and operate tester rapidly to be sure nozzle valve is seated. Dry injector tip, then operate tester slowly to raise gauge pressure to within 690 kPa (100 psi) under the opening pressure and maintain this pressure for five seconds. Observe the injector tip and if nozzle is in good condition, there should be no fuel accumulation in the five second period, although a slight dampness is permissible. If fuel drips or a visible drop forms, renew injector or overhaul as outlined in paragraph 71.

71. OVERHAUL. Soak injector in a carbon removing solvent and clean outside of injector thoroughly. Clamp flats of injector body (2—Fig. 68) in a soft-jawed vise so injector tip is pointing upward. Use a box wrench to remove cap nut (8) and be sure nozzle valve (7) does not turn with cap nut. If nozzle valve does turn with cap nut, dowels and/or valve stop (6) will be damaged. Return injector assembly to solvent if nozzle valve is stuck to cap nut.

With cap nut removed, nozzle valve (7), valve stop (6), spring seat (5), spring (4) and shims (3) can be removed from body (2). Note number and thickness of shims (3) removed for aid in reassembly. Shims are available in thirty thicknesses ranging from 1.0 mm (0.039 in.) to 1.98 mm (0.078 in.).

PREVIEW - YOUFIXTHIS.COM
Download full manual at youfixthis.com

into the ports. Heat hydraulic oil to a temperature of 50° C (120° F) and operate engine at 1500 rpm. With range transmission in NEUTRAL and speed transmission in first speed position, fully cycle inching pedal. Move forward-reverse control lever to forward, then reverse positions and note pressure readings. Pressure readings should be 1800-2000 kPa (260-290 psi). If not, remove, clean and repair forward-reverse control valve assembly as outlined in paragraph 114.

114. R&R AND OVERHAUL. To remove the forward-reverse control valve, apply park brake or block rear wheels securely. Disconnect battery cables.

NOTE: Although not entirely necessary, some mechanics prefer to remove seat assembly to provide easier access for cleaning and removal of the valve.

Thoroughly clean control valve and surrounding area. Identify and tag pressure switch and solenoid electrical connectors, then disconnect the connectors. Disconnect the inching cable. Unbolt the chassis ground wire. Disconnect inching spool return spring. Remove the inching spool link. Refer to Fig. 138 and remove valve mounting bolts (6 and 12). Remove the shuttle valve and place on a clean bench.

To disassemble the forward-reverse shuttle valve, remove breather (15). Mark solenoids and valve body (1) for aid in reassembly. Identify and mark pressure switches, then remove the pressure switches (4 and 5). Remove the reverse solenoid (10) retaining nut and coil block, then unscrew and remove the solenoid valve. Repeat the operation for the forward solenoid (3), modulation solenoid (17) and the differential lock solenoid (18). Remove the temperature compensating valve (31), orifice spool (28) and filter (27).

NOTE: The temperature compensating valve is not serviceable and should be disassembled only for cleaning. Renew the valve if any fault is found.

Remove the front modulation valve plug, then the rear modulation valve plug (21) and remove the modulation piston (23), inner spring (24), outer spring (25) and spool (26). Remove front sequencing valve plug and rear sequencing valve plug (39), then remove spring (41), spacer (42) and sequencing spool (43). Remove the four Allen screws and remove cap (32), secondary spring (34), washer (35), return spring (36) and poppet (37). Withdraw the inching spool (38). Use a seal puller such as (CAS-10580) and remove oil seal (11).

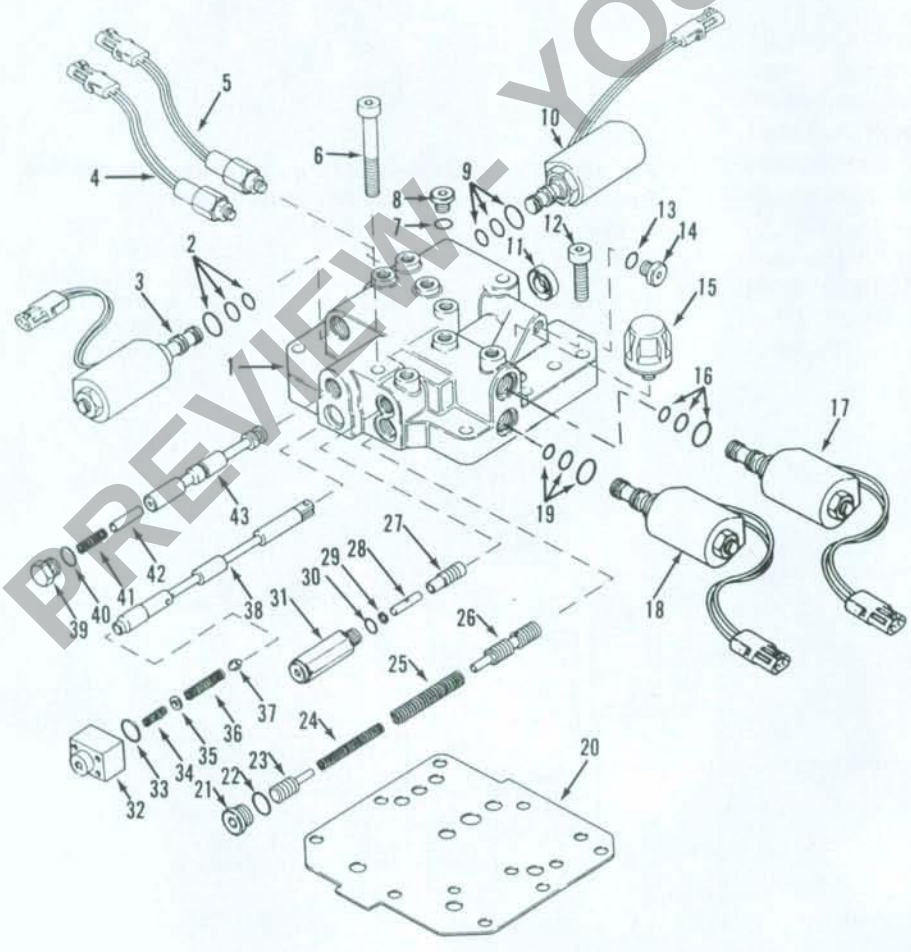

Fig. 138—Exploded view of the forward-reverse control valve assembly used on all models.

1. Valve body
2. "O" rings
3. Forward solenoid
4. Forward pressure switch
5. Reverse pressure switch
6. Retaining bolt (2)
7. "O" ring
8. Plug
9. "O" rings
10. Reverse solenoid
11. Oil seal
12. Retaining bolt (6)
13. "O" ring
14. Plug
15. Breather
16. "O" rings
17. Modulation solenoid
18. Differential lock solenoid
19. "O" rings
20. Gasket
21. Plug
22. "O" ring
23. Modulation piston
24. Modulation spring (inner)
25. Modulation spring (outer)
26. Modulation spool
27. Filter
28. Orifice spool
29. Snap ring
30. "O" ring
31. Temperature compensator valve
32. Cap
33. "O" ring
34. Secondary spring
35. Washer
36. Return spring
37. Poppet
38. Inching (clutch) spool
39. Plug
40. "O" ring
41. Sequencing spring
42. Spacer
43. Sequencing spool

PREVIEW - YOUFIXTHIS.COM

Download full manual at youfixthis.com

PREVIEW ONLY

You're viewing 11 of 134 pages

The full manual includes:

- All 134 pages, complete
- Searchable PDF (find any keyword)
- No watermarks
- Instant download
- Print-ready quality

GET FULL MANUAL NOW

Case/international 5120, 5130, 5140 Shop Manual

Scan or click anywhere
youfixthis.com

Click anywhere on this page to get the full manual