

PREVIEW - WWW.300FIXTHIS.COM

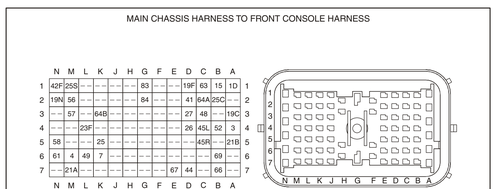

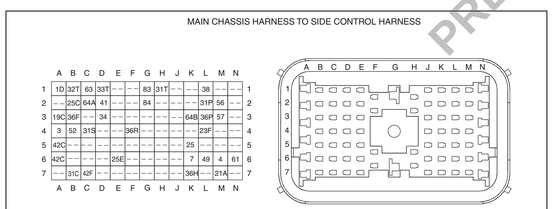

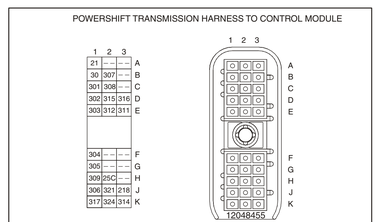

FUSE LOCATION

SPARE	NOT USED	NOT USED	NOT USED
SPARE	POWER OUTLET	SPARE	PILOT CONTROLS SH AUX (OPTION)
FRONT WORK LIGHTS	POWER OUTLET	AIR SUSP SEAT AIR COMP (OPTION)	RETURN TO DIG
REAR WORK LIGHTS	SPARE	SPARE	DRIVING LIGHTS
FUEL SHUTOFF	BLOWER (OPTION)	DOME LIGHT	ROTATING BEACON (OPTION)
INSTRUMENTS ALARM SYS.	SIGNAL LIGHTS	HORN	4WD (OPTION)
STARTING TRANSMISSION CONTROL	RADIO, RIDE CNTRL, QUICK COUPLER (OPTION)	RADIO (BATT) (OPTION)	WIPERS (OPTION)

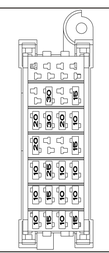

RELAY LOCATION

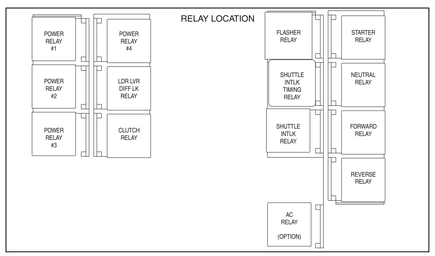

COMPONENTS

1. BATTERY
2. ALTERNATOR
3. CHASSIS GROUND
4. STARTER AND STARTER SOLENOID
5. POWER JUNCTION
6. POWER RELAYS
7. FUEL SHUTOFF SOLENOID
8. KEY SWITCH
9. FRONT CONSOLE GROUND
10. STARTER RELAY
11. NEUTRAL START RELAY
12. CLUTCH CUTOUT RELAY
13. FNR SWITCH
14. DIODE
15. DIODE
16. FUSE BLOCK
17. SIDE CONSOLE GROUND
18. INSTRUMENT CLUSTER
19. WARNING ALARM
20. HYDRAULIC FILTER RESTRICTION SWITCH
21. FUEL LEVEL SENDER
22. ENGINE OIL PRESSURE SWITCH
23. REAR AXLE TEMPERATURE SENDER
24. AIR FILTER RESTRICTION SWITCH
25. TRANSMISSION TEMPERATURE SENDER
26. ENGINE TEMPERATURE SENDER
27. PARKING BRAKE SWITCH #1
28. PARKING BRAKE SWITCH #2
29. SEAT POSITION SWITCH
30. SHUTTLE INTERLOCK RELAY
31. SHUTTLE INTERLOCK TIMING RELAY
32. DIODE
33. DIODE
34. FORWARD RELAY
35. REVERSE RELAY
36. DIODE
37. DIODE
38. FORWARD SOLENOID
39. REVERSE SOLENOID
40. BACKUP ALARM
41. CLUTCH CUTOUT SWITCH (SHIFT HANDLE)
42. CLUTCH CUTOUT SWITCH LOADER HANDLE STANDARD TRANSMISSION
43. CLUTCH CUTOUT SWITCH LOADER HANDLE POWERSHIFT TRANSMISSION
44. RETURN-TO-DIG LIMIT SWITCH
45. LOADER VALVE SOLENOID
46. FRONT WIPER SWITCH
47. REAR WIPER SWITCH
48. FRONT WINDSHIELD WASHER SWITCH (CAB/ROPS WINDSCREEN)
49. REAR WINDSHIELD WASHER SWITCH (CAB/ROPS WINDSCREEN)
50. FRONT WIPER MOTOR (CAB)
51. REAR WIPER MOTOR (CAB)
52. REAR WIPER CUT OFF SWITCH
53. WINDSHIELD WASHER MOTOR
54. BLOWER SWITCH
55. AIR CONDITIONING PRESSURE RELAY
56. BLOWER MOTOR RESISTOR BOARD AND THERMAL FUSE
57. BLOWER MOTOR
58. AIR CONDITIONER COMPRESSOR CLUTCH
59. AIR CONDITIONER TEMPERATURE SWITCH
60. AIR CONDITIONER LOW PRESSURE SWITCH
61. AIR CONDITIONER HIGH PRESSURE SWITCH
62. DOME LAMP SWITCH (DOOR SWITCH)
63. DOME LAMP WITH SWITCH
64. REAR HORN BUTTON
65. TURN SIGNAL, DRIVING LAMP, AND HORN SWITCH
66. DRIVING LAMPS
67. REAR STOP AND TAIL LAMPS
68. HORN
69. HAZARD FLASHER SWITCH
70. BRAKE LAMP SWITCH
71. FLASHER RELAY
72. FRONT TURN SIGNAL LAMPS
73. REAR TURN SIGNAL LAMPS
74. TURN SIGNAL INDICATOR LAMPS
75. POWER PLUG #1
76. POWER PLUG #2
77. AIR SUSPENSION SEAT - AIR COMPRESSOR SWITCH AND MOTOR
78. ROTATION BEACON SWITCH
79. ROTATING BEACON
80. FRONT WORK LAMP SWITCH
81. FRONT WORK LAMPS
82. REAR WORK LAMP SWITCH
83. REAR WORK LAMPS
84. 4WD SWITCH POWER SHIFT TRANSMISSION
85. 4WD SWITCH STANDARD TRANSMISSION
86. DIODE
87. DIODE
88. 4WD SOLENOID
89. THUMB OPERATED REAR AUXILIARY HYDRAULIC SWITCH (PILOT CONTROL)
90. FOOT OPERATED REAR AUXILIARY HYDRAULIC SWITCH (MANUAL CONTROL)
91. DIODE
92. AUXILIARY BACKHOE HYDRAULIC SOLENOID
93. RADIO
94. LEFT SPEAKER
95. RIGHT SPEAKER
96. RIDE CONTROL ENGAGE SWITCH
97. RIDE CONTROL SOLENOID (ACCUMULATOR)
98. RIDE CONTROL SOLENOID (TANK)
99. BOOM LOCK SWITCH
100. BOOM LOCK SOLENOID
101. LOADER QUICK COUPLER SWITCH
102. LOADER QUICK COUPLER SOLENOID
103. LOAD SENSING SOLENOID
104. DIODE
105. DIODE
106. DIODE
107. BACKHOE QUICK COUPLER SWITCH #A
108. BACKHOE QUICK COUPLER SWITCH #B
109. DIODE
110. BACKHOE QUICK COUPLER SOLENOID
111. DIODE
112. LOADER LEVER DIFFERENTIAL LOCK ENGAGE SWITCH - POWER SHIFT TRANSMISSION
113. LOADER LEVER DIFFERENTIAL LOCK ENGAGE SWITCH - STANDARD TRANSMISSION
114. DIFFERENTIAL LOCK ENABLE RELAY
115. DIFFERENTIAL LOCK SOLENOID
116. GRID HEATER
117. COLD START RELAY
118. FUSE 300 AMP
119. COLD START CONTROLLER
120. COLD START TEMPERATURE SENDER
121. E'HOE EXTEND PUSH BUTTON
122. E'HOE RETRACT BUTTON
123. HORN SWITCH
124. LH STABILIZER SWITCH
125. RH STABILIZER SWITCH
126. LH STABILIZER PRESSURE SWITCH
127. RH STABILIZER PRESSURE SWITCH
128. ELECTRONIC PILOT CONTROLLER
129. RH STABILIZER DOWN SOLENOID
130. RH STABILIZER UP SOLENOID
131. LH STABILIZER DOWN SOLENOID
132. LH STABILIZER UP SOLENOID
133. AUX REVERSE SOLENOID
134. AUX FORWARD SOLENOID
135. E'HOE RETRACT SOLENOID
136. E'HOE EXTEND SOLENOID
137. PILOT ON/OFF SWITCH
138. PILOT CONTROL RELAY
139. AUX FORWARD PUSH BUTTON
140. AUX REVERSE PUSH BUTTON
141. PATTERN CHANGE SWITCH
142. PRESSURE REDUCING VALVE SOLENOID
143. DIODE
144. PATTERN CHANGE SOLENOIDS
145. DIODE
146. FNR LEVER SWITCH - POWER SHIFT TRANSMISSION
147. LOADER LEVER KICKDOWN SWITCH - POWER SHIFT TRANSMISSION
148. POWER SHIFT TRANSMISSION CONTROL MODULE CONNECTION
149. POWER SHIFT TRANSMISSION CONNECTOR
150. LEFT-HAND BRAKE PRESSURE SWITCH
151. RIGHT-HAND BRAKE PRESSURE SWITCH
152. COLD START TIMING SOLENOID
153. COLD START TIMING TEMPERATURE SWITCH

CIRCUIT DIAGRAM LEGEND

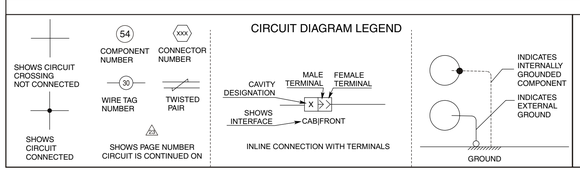

WIRE IDENTIFICATION

Y (35R) 1.0
WIRE COLOR
WIRE NUMBER
WIRE SIZE

ABBREV	WIRE COLOR
B	BLACK
BR	BROWN
DB	DARK BLUE
DG	DARK GREEN
G	GRAY
LB	LIGHT BLUE
LG	LIGHT GREEN
O	ORANGE
P	PINK
R	RED
T	TAN
V	VIOLET (PURPLE)
W	WHITE
Y	YELLOW

ACTUATORS

LEVER RELEASED, LEVER ACTUATED, LIQUID LEVEL FLOAT, PRESSURE, HAND, DIODE, VARIABLE RESISTOR, RESISTOR, COIL, LIGHT EMITTING DIODE, TEMP., ▲ MOMENTARY, ● MAINTAINED CONTACTS

HOUSINGS

VACUUM SWITCH, PRESSURE SWITCH, TEMPERATURE SWITCH, MOTOR, LAMP

CONTACT CONFIGURATIONS

S.P.S.T., S.P.D.T., D.P.S.T., D.P.D.T.

MISCELLANEOUS SYMBOLS

FUSE, AUTO. RESET CIRCUIT BREAKER, MANUAL RESET CIRCUIT BREAKER

NOTES

1. DIAGRAM SHOWN WITH VEHICLE PARKED, POWER OFF AND CONTROLS IN OFF OR NEUTRAL POSITION.
2. SHEET NUMBERS REFER TO THE NUMBER AT THE BOTTOM CENTER OF EACH BLOCK.

LEGEND

- INDICATES CONSTANT POWER
- INDICATES POWER WHEN KEY SWITCH IS IN ON POSITION
- INDICATES MOMENTARY POWER WHEN KEY SWITCH IS IN START POSITION

ELECTRICAL SCHEMATIC
580M, 580SM, 580SM+
and 590SM LOADER BACKHOE

Additional copies of this Hydraulic and Electrical Schematic can be ordered through Technical Publications Distribution System. The Part Number is 6-75122.

BCDSE103

Download full manual at youfixthis.com

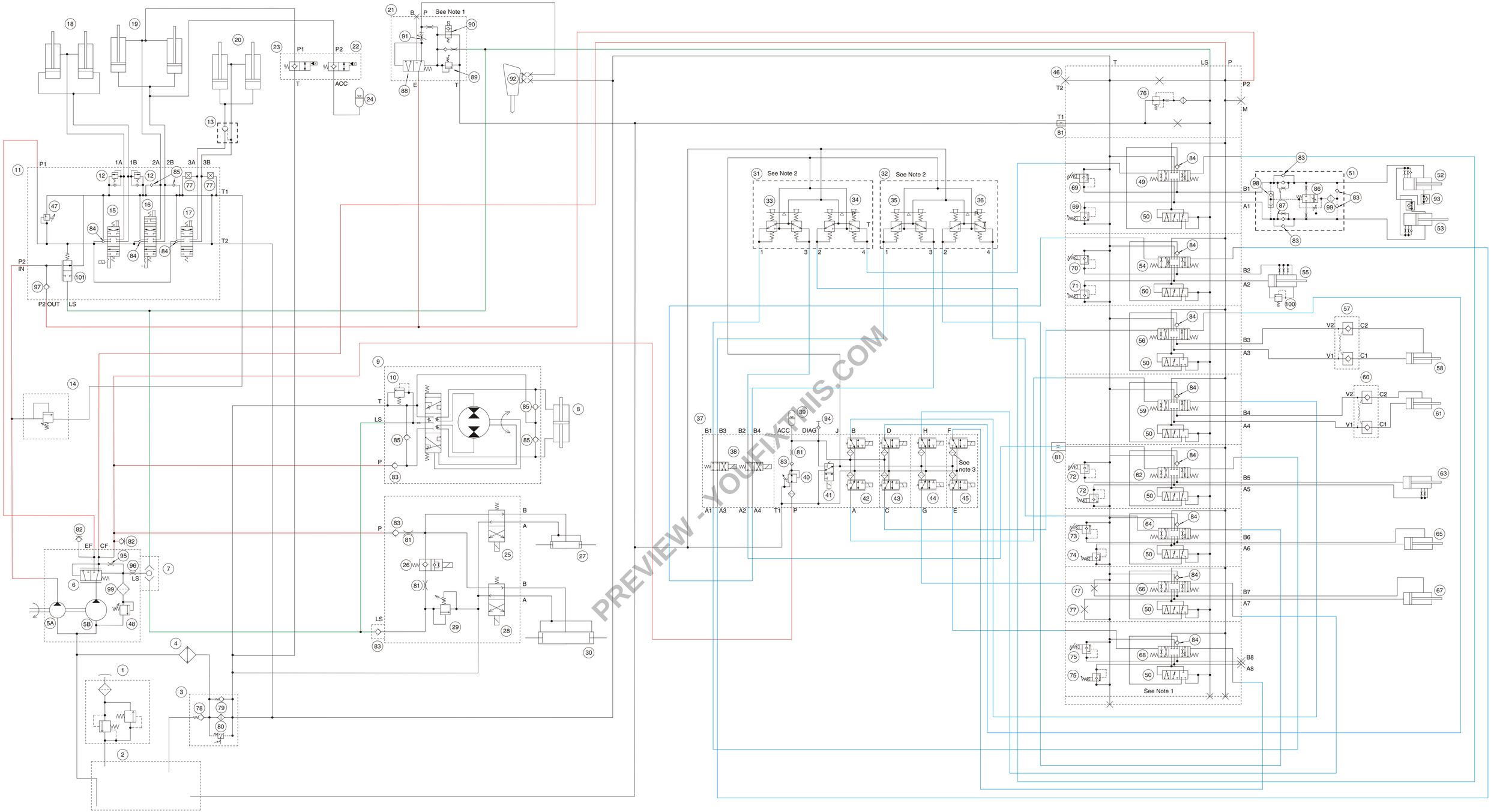

PREVIEW - YOUFIXTHIS.COM

COMPONENTS

1. HYDRAULIC RESERVOIR BREATHER
2. HYDRAULIC RESERVOIR
3. HYDRAULIC FILTER
4. OIL COOLER
5A. SMALL PUMP SECTION
42 L/min @ 207 BAR
11 GPM @ 3000 PSI
5B. LARGE PUMP SECTION
119 L/min @ 207 BAR
31.5 GPM @ 3000 PSI
6. PRIORITY VALVE
7. LOAD SENSE SHUTTLE VALVE
8. STEERING CYLINDER
9. STEERING CONTROL VALVE
10. STEERING RELIEF VALVE
162 +10 -0 BAR
2350 +150 -0 PSI
11. LOADER CONTROL VALVE
12. LOADER BUCKET CIRCUIT RELIEF VALVE WITH ANTI-CAVITATION CHECK VALVE
210 ± 3 BAR
3050 ± 50 PSI
13. 4-IN-1 BUCKET LOCK VALVE
14. SMALL PUMP RELIEF VALVE
2925-2975 PSI (202-205 BAR)
15. BUCKET SPOOL
16. LIFT SPOOL
17. CLAM SPOOL
18. BUCKET CYLINDERS
19. LIFT CYLINDERS
20. CLAM CYLINDERS
21. UNI-DIRECTIONAL AUXILIARY HYDRAULICS
22. RIDE CONTROL SOLENOID VALVE (ACCUMULATOR)
23. RIDE CONTROL SOLENOID VALVE (TANK)
24. ACCUMULATOR FOR RIDE CONTROL
25. BACKHOE QUICK COUPLER SOLENOID VALVE
26. QUICK COUPLER SOLENOID
27. BACKHOE QUICK COUPLER CYLINDER
28. LOADER QUICK COUPLER SOLENOID VALVE
29. QUICK COUPLER RELIEF VALVE
189.5 ± 3 BAR
2750 ± 50 PSI
30. LOADER QUICK COUPLER CYLINDER
31. LEFT-HAND JOYSTICK CONTROL
32. RIGHT-HAND JOYSTICK CONTROL
33. BOOM CONTROL
34. SWING CONTROL
35. DIPPER CONTROL
36. BUCKET CONTROL
37. REGULATED MANIFOLD
38. PATTERN CHANGE VALVE
39. ACCUMULATOR
40. PILOT PRESSURE REDUCING VALVE
24 to 34.5 BAR
350 to 500 PSI
41. PILOT CONTROL ON OFF SOLENOID
42. RIGHT-HAND STABILIZER CONTROL
43. LEFT-HAND STABILIZER CONTROL
44. EXTEND-A-HOE CONTROL
45. BI-DIRECTIONAL AUXILIARY CONTROL
46. BACKHOE CONTROL VALVE
47. LOADER RELIEF VALVE
210 ± 3 BAR
3050 ± 50 PSI
48. LOAD SENSING RELIEF VALVE
210 ± 3 BAR
3050 ± 50 PSI
49. SWING SPOOL
50. COMPENSATOR
51. SWING DAMPENING VALVE
52. LEFT-HAND SWING CYLINDER
53. RIGHT-HAND SWING CYLINDER
54. BOOM SPOOL
55. BOOM CYLINDER
56. LEFT STABILIZER SPOOL
57. LEFT STABILIZER LOAD CHECK VALVE
58. LEFT-HAND STABILIZER CYLINDER
59. RIGHT STABILIZER SPOOL
60. RIGHT STABILIZER LOAD CHECK VALVE
61. RIGHT-HAND STABILIZER CYLINDER
62. DIPPER SPOOL
63. DIPPER CYLINDER
64. BUCKET SPOOL
65. BUCKET CYLINDER
66. EXTEND-A-HOE SPOOL
67. EXTEND-A-HOE CYLINDER
68. BI-DIRECTIONAL SPOOL
69. SWING CIRCUIT RELIEFS WITH ANTI-CAVITATION CHECK VALVE
207 ± 3 BAR
3000 ± 50 PSI
70. BOOM B PORT CIRCUIT RELIEF WITH ANTI-CAVITATION CHECK VALVE
331 ± 3 BAR
4800 ± 50 PSI
71. BOOM A PORT CIRCUIT RELIEF WITH ANTI-CAVITATION CHECK VALVE
221 ± 3 BAR
3205 ± 50 PSI
72. DIPPER CIRCUIT RELIEFS WITH ANTI-CAVITATION CHECK VALVE
238 ± 3 BAR
3450 ± 50 PSI
73. BUCKET B PORT CIRCUIT RELIEF WITH ANTI-CAVITATION CHECK VALVE
221 ± 3 BAR
3205 ± 50 PSI
74. BUCKET A PORT CIRCUIT RELIEF WITH ANTI-CAVITATION CHECK VALVE
262 ± 3 BAR
3800 ± 50 PSI
75. AUXILIARY CIRCUIT RELIEFS WITH ANTI-CAVITATION CHECK VALVE
220 +5 -1 BAR
3191 +72.5 -14.5 PSI
76. LOAD SENSE DRAIN ORIFICE
77. PLUG
78. COOLER BYPASS
79. FILTER BYPASS
80. FILTER CONDITION SWITCH
81. ORIFICE
82. PUMP TEST PORT
83. CHECK VALVE
84. LOAD CHECK VALVE
85. ANTI CAVITATION VALVE
86. SWING CUSHION SPOOL
87. BACK PRESSURE VALVE
88. PRIORITY SPOOL
89. UNI-DIRECTIONAL AUXILIARY RELIEF VALVE
90. UNI-DIRECTIONAL AUXILIARY ON/OFF SOLENOID
91. FLOW CONTROL ADJUSTMENT
92. HAMMER ATTACHMENT EXAMPLE
93. FLOATING ORIFICE
94. PILOT MANIFOLD TEST PORT
95. DYNAMIC SENSING ORIFICE
96. LS SIGNAL ORIFICE
97. P2 PORT CHECK VALVE
98. SHUTTLE CHECK VALVE
99. SCREEN
100. BOOM PISTON RELIEF
101. RELOADER VALVE

NOTES

1. Machines will not be equipped with bi-directional and uni-directional auxiliary hydraulics on the same machine. Valves are shown for reference only.
2. Pilot controls are listed with pattern change valves not activated.
3. Early production machines were not equipped with a screen on items 42, 43, 44, and 45.

HYDRAULIC SYMBOLS

PRESSURE
COMPONENT
RETURN
LOAD SENSE
PILOT PRESSURE

CROSSING LINES
CHECK VALVE
FILTER OR SCREEN
LINE CONNECTION
RESTRICTOR
OIL COOLER

HYDRAULIC SCHEMATIC FOR 590SM SERIES 2 WITH PILOT CONTROLS

Additional copies of this Hydraulic and Electrical Schematic can be ordered through Technical Publications Distribution System. The Part Number is 6-75122

BO59E108

Download full manual at youfixthis.com

SPECIFICATIONS

Special Torques

Mounting bolts for the rear axle	434 to 515 Nm (320 to 380 pound-feet)
Cap screws for the rear drive shaft	33 to 39 Nm (24 to 29 pound-feet)
Cap screws for the front drive shaft	33 to 39 Nm (24 to 29 pound-feet)
Wheel nuts for the rear wheels	See Section 6003
Transmission insulator mounts	90 to 100 Nm (67 to 73 pound-feet)
Cap screws for mounting transmission to the engine flywheel housing	52 to 57 Nm (38 to 42 pound-feet)
Cap screws for mounting the torque converter to the flywheel	52 to 57 Nm (38 to 42 pound-feet)
Mounting bolts for the drive shaft guard	90 to 107 Nm (66 to 79 pound-feet)
Mounting bolt for the gear shift lever	125 to 150 Nm (93 to 112 pound-feet)

Fluid Capacities

Transmission

Standard Transmission

2 Wheel Drive

Total system capacity	18.5 litres (19.5 U.S. quarts)
Refill capacity with or without filter change	11.9 litres (12.6 U.S. quarts)
Type of Fluid	Case AKCELA MS-1209, Hy-Tran® Ultra

4 Wheel Drive

Total system capacity	20.8 litres (22 U.S. quarts)
Refill capacity with or without filter change	14.4 litres (15.2 U.S. quarts)
Type of Fluid	Case AKCELA MS-1209, Hy-Tran® Ultra

Powershift Transmission

4 Wheel Drive

Total system capacity	21.0 litres (22.2 U.S. quarts)
Refill capacity with filter change	14.4 litres (15.2 U.S. quarts)
Refill capacity without filter change	13.4 litres (14.2 U.S. quarts)
Type of Fluid	Case AKCELA Trans-XHD

Rear Axle

580M, 580 Super M and 580 Super M +

Capacity - center bowl	14.2 litres (15 U.S. quarts)
Capacity - each wheel end	1.5 litres (1.6 U.S. quarts)
Type of Fluid	Case AKCELA MS-1209, Hy-Tran® Ultra
Center Bowl Oil Additive	Case AKCELA Axle Oil Additive

590 Super M

Capacity - center bowl	14.2 litres (15 U.S. quarts)
Capacity - each wheel end	2 litres (2.1 U.S. quarts)
Type of Fluid	Case AKCELA MS-1209, Hy-Tran® Ultra
Center Bowl Oil Additive	Case AKCELA Axle Oil Additive

PREVIEW - YOUFIXTHIS.COM

Download full manual at youfixthis.com

CAPACITIES AND LUBRICANTS

Engine Crankcase
- All Machines ..... 13.6 litres (14.4 U.S. quarts)
- Specifications ..... Case AKCELA No. 1 15W-40 API CH-4

Fuel Tank
- Capacity, usable (580M and 580SM) ..... 119 litres (31.4 U.S. gallons)
- Capacity, usable (580SM+ and 590SM) ..... 159 litres (42 U.S. gallons)
- Optional tank (580M and 580SM only) ..... 151 litres (40 U.S. gallons) usable
- Specifications ..... See page 6

Cooling System
- Capacity with heater (580M) ..... 16.8 litres (17.8 U.S. quarts)
- Capacity without heater (580M) ..... 16.1 litres (17 U.S. quarts)
- Capacity with heater (580SM, 580SM+ and 590SM) ..... 18 litres (19 U.S. quarts)
- Capacity without heater (580SM, 580SM+ and 590SM) ..... 17.3 litres (18.3 U.S. quarts)
- Specifications ..... 50% water and 50% ethylene glycol

Hydraulic System
- Total System
  - 580M ..... 106 litres (28 U.S. gallons) add 5.7 litres (6 U.S. qts) for extendahoe
  - 580SM and 580SM+ ..... 119 litres (31.5 U.S. gallons) add 5.7 litres (6 U.S. qts) for extendahoe
  - 590SM ..... 130 litres (34.3 U.S. gallons) add 5.7 litres (6 U.S. qts) for extendahoe
- Capacity with filter change ..... 54.9 litres (14.5 U.S. gallons)
- Capacity without filter change ..... 53 litres (14 U.S. gallons)
- Specifications ..... Case AKCELA Hy-Tran® Ultra

Transmission
- Standard Transmission
  - 2 Wheel Drive
    - Total system capacity ..... 18.5 litres (19.5 U.S. quarts)
    - Refill capacity with or without filter change ..... 11.9 litres (12.6 U.S. quarts)
    - Type of Fluid ..... Case AKCELA Hy-Tran® Ultra
  - 4 Wheel Drive
    - Total system capacity ..... 20.8 litres (22 U.S. quarts)
    - Refill capacity with or without filter change ..... 14.4 litres (15.2 U.S. quarts)
    - Type of Fluid ..... Case AKCELA Hy-Tran® Ultra
- Powershift Transmission
  - 4 Wheel Drive
    - Total system capacity ..... 21.0 litres (22.2 U.S. quarts)
    - Refill capacity with filter change ..... 14.4 litres (15.2 U.S. quarts)
    - Refill capacity without filter change ..... 13.4 litres (14.2 U.S. quarts)
    - Type of Fluid ..... Case AKCELA Trans-XHD

Front Drive Axle - 4 Wheel Drive
- 580M and 580SM
  - Capacity - center bowl ..... 5.5 litres (5.8 U.S. quarts)
  - Capacity - each wheel end ..... 0.66 litres (0.7 U.S. quarts)
  - Type of Fluid ..... Case AKCELA Hy-Tran® Ultra
- 580SM+
  - Capacity - center bowl ..... 7.6 litres (8 U.S. quarts)
  - Type of Fluid ..... Case AKCELA Transaxle Fluid MS1317
  - Capacity - each wheel end ..... 0.7 litres (0.74 U.S. quarts)
  - Type of Fluid ..... Case AKCELA Hy-Tran® Ultra
- 590SM
  - Capacity - center bowl ..... 6.5 litres (6.9 U.S. quarts)
  - Capacity - each wheel end ..... 1 liter (1.1 U.S. quarts)
  - Type of Fluid ..... Case AKCELA Hy-Tran® Ultra

PREVIEW - YOUFIXTHIS.COM
Download full manual at youfixthis.com

TROUBLESHOOTING PROCEDURE

NOTE: *All troubleshooting procedures must be done with oil at operating temperature.*

Machine Will Not Move

Is oil level correct? Add oil as required. Is there still a problem. See Page 3.

No → Troubleshooting complete. Find cause for loss of oil.

Yes ↓

Check for broken universal joint or drive shaft and repair as required. Is there still a problem?

No → Troubleshooting complete.

Yes ↓

Check to see if drive shaft turns with transmission directional control lever (FNR) in forward or reverse and rear wheels off the ground. Does the drive shaft turn?

No → Check electrical connections at transmission. Is there power to the clutch solenoids?

No ↓ Check the fuse panel. See Section 4001.

Yes →

Check pressure and pump flow. See page 19. Is flow in specified range?

No → Possible causes include:

1. Cold oil by-pass valve might be stuck or damaged.
2. Pressure regulator could be bad.
3. Pump could be bad. See Section 6007 to repair or replace as required.

Yes ↓

There can be a problem in the transmission control valve. See page 14. Is the converter In pressure in the specified range?

No → Check the transmission control valve. See Section 6007. Repair or replace as required.

Yes ↓

There can be a problem in the forward/reverse solenoid valve. See page 15. Are the regulated clutch pressures for foward and reverse in the specified range?

No → Check the transmission. See Section 6007. Repair or replace as required.

Yes ↓

Continued on next page.

PREVIEW - YOUFIXTHIS.COM

Download full manual at youfixthis.com

SPECIFICATIONS

NOTE: *The following specifications are for an engine with more than 50 hours of operation.*

580M Series 2 Natural Aspirated

Full throttle - no load	2320 to 2450 rpm
Idle speed	850 to 950 rpm
Loader hydraulic stall	2225 to 2350 rpm
Backhoe hydraulic stall	2225 to 2350 rpm
Torque converter stall	2135 to 2310 rpm
Combined stall	1405 to 1800 rpm

580M Turbo Series 2

Full throttle - no load	2320 to 2450 rpm
Idle speed	850 to 950 rpm
Loader hydraulic stall	2225 to 2375 rpm
Backhoe hydraulic stall	2225 to 2375 rpm
Torque converter stall	2215 to 2315 rpm
Combined stall	1650 to 1930 rpm

580SM Series 2

Full throttle - no load	2320 to 2450 rpm
Idle speed	850 to 950 rpm
Loader hydraulic stall	2225 to 2350 rpm
Backhoe hydraulic stall	2190 to 2300 rpm
Torque converter stall	2040 to 2250 rpm
Combined stall	1595 to 1840 rpm

580SM+ Series 2

Full throttle - no load	2320 to 2450 rpm
Idle speed	850 to 950 rpm
Loader hydraulic stall	2225 to 2350 rpm
Backhoe hydraulic stall	2190 to 2300 rpm
Torque converter stall	2040 to 2250 rpm
Combined stall	1595 to 1840 rpm

590SM Series 2

Full throttle - no load	2320 to 2450 rpm
Idle speed	850 to 950 rpm
Loader hydraulic stall	2225 to 2350 rpm
Backhoe hydraulic stall	2025 to 2250 rpm
Torque converter stall	2035 to 2245 rpm
Combined stall	1495 to 1760 rpm

PREVIEW - YOUFIXTHIS.COM

Download full manual at youfixthis.com

M SERIES 2 LOADER/BACKHOE
Service Manual
Bur 6-74432

Table of Contents (Continued)

Description	Section Number	Publication Form Number
Hydraulics (Cont)	**Tab 8**	
Hydraulic Pump 590SM With Pilot Controls	8004	6-80010
Loader Control Valve 580M, 580SM 580SM+ (all versrions), and 590SM With Mechanical Controls	8005	6-74912
Loader Control Valve 590SM With Pilot Controls	8005	6-79930
Cylinders	8006	6-74920
Backhoe Control Valve With Mechanical Controls	8007	6-74931
Backhoe Control Valve With Pilot Controls 580M, 580SM and 580SM+	8007	6-74941
Backhoe Control Valve With Pilot Controls 590SM	8007	6-79940
Accumulator for Machines With Ride Control and Pilot Control Accumulator	8009	6-74960
Solenoid Valve for Machines with Optional Ride Control	8010	6-74970
Boom Lock Solenoid Valve	8011	6-74980
Quick Coupler	8012	6-74990
Swing Dampening Valve	8013	6-75000
Pilot Control Unit	8014	6-79950
Proportional Pilot Pressure Control	8015	6-79960
Mounted Equipment	**Tab 9**	
Section Index - Mounted Equipment		6-75011
Pedals and Levers	9001	6-75020
Air Conditioning Troubleshooting	9002	6-75031
Air Conditioning System Service	9004	6-75051
Air Conditioning Components Service	9005	6-75061
Loader	9006	6-75070
ROPS Cab and Canopy	9007	6-75080
Backhoe	9008	6-75090
Standard and Mechanical Suspension Seat	9009	6-75100
Sears Mechanical and Standard Suspension Seat	9009	6-80000
Air Suspension Seat	9010	6-75111
Rear Window Replacement	9012	6-75040
Schematic Set		
Hydraulic and Electrical Schematics	In Rear Pocket	6-75122

NOTE: CNH Corporation reserves the right to make improvements in design or changes in specifications at any time without incurring any obligation to install them on units previously sold.

PREVIEW - YOUFIXTHIS.COM

Download full manual at youfixthis.com

Figure 5

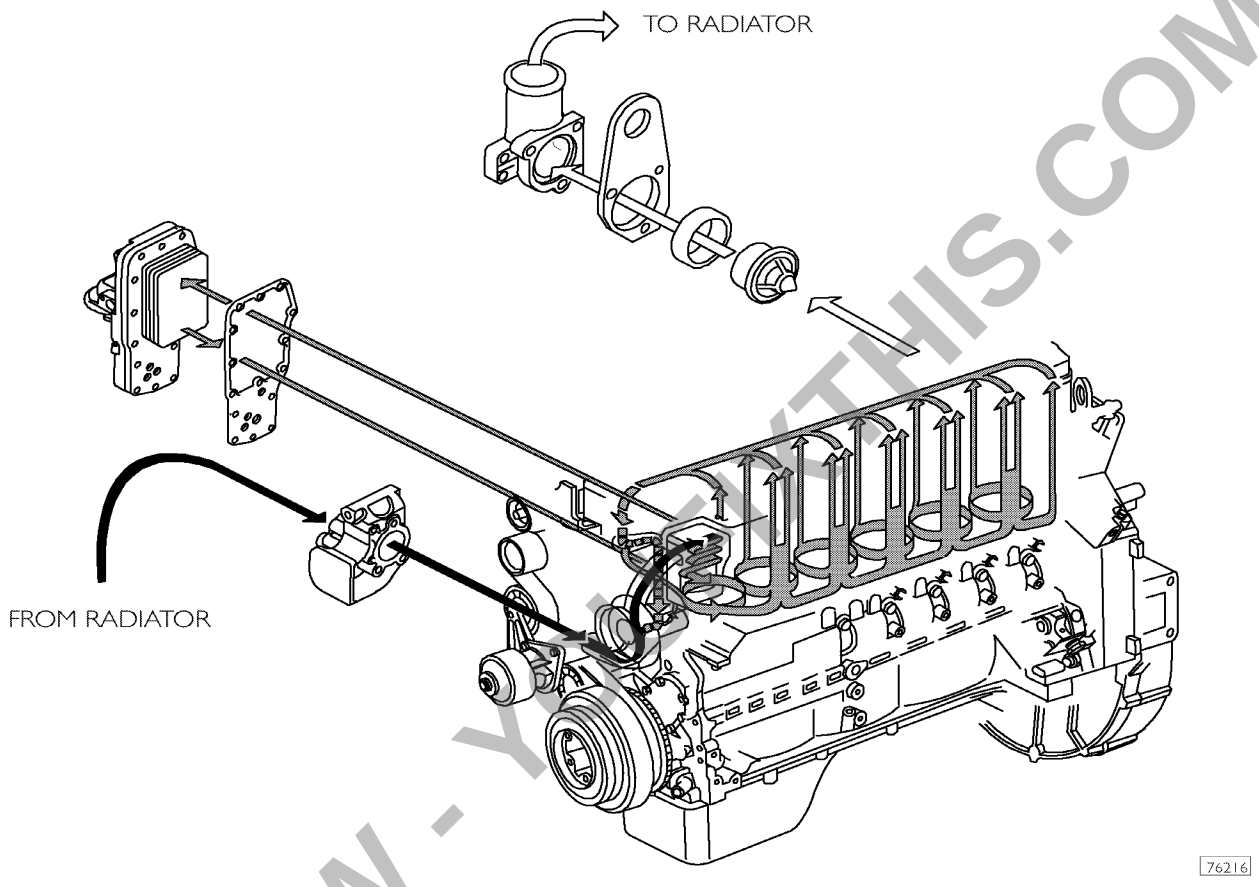

Water coming out from thermostat

Water recirculating in engine

Water coming into pump

COOLING SYSTEM LAYOUT (6 cyl. engines)

PREVIEW - YOUFIXTHIS.COM

Download full manual at youfixthis.com

Cooling liquid temperature sensor

Figure 216

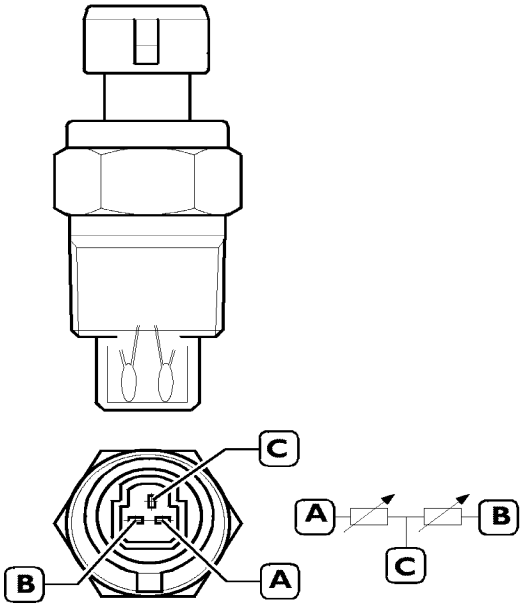

It is a component integrating a temperature sensor.

It is assembled to the engine head close to the thermostat unit and its duty is to detect engine cooling liquid temperature.

Specifications:

Range of working temperatures:

Connection side	–40 ÷ +150 °C for < 10 min.
Bulb side on engine:	–40 ÷ +140 °C
Working tensions:	6 ÷ 28 V

Settings:

80 °C	0.304 ÷ 0.342 kΩ
20 °C	2.262 ÷ 2.760 kΩ
–10 °C	8.244 ÷ 10.661 kΩ

Starter

Figure 217

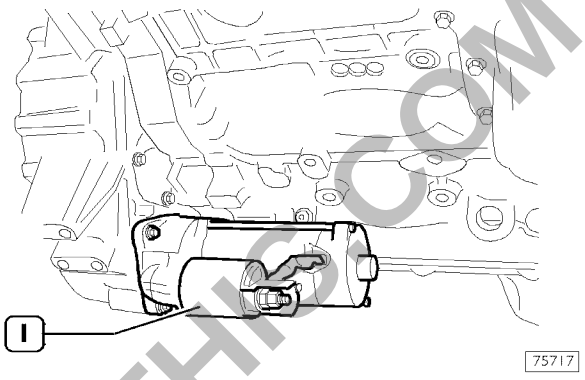

Starter is usually driven by starting unit placed on the vehicle dashboard and provides positive tension to the tele–switch assembled to the starter itself.

Specifications:

BOSCH 3 kW – 12V

KSB Water temperature sensor

Figure 218

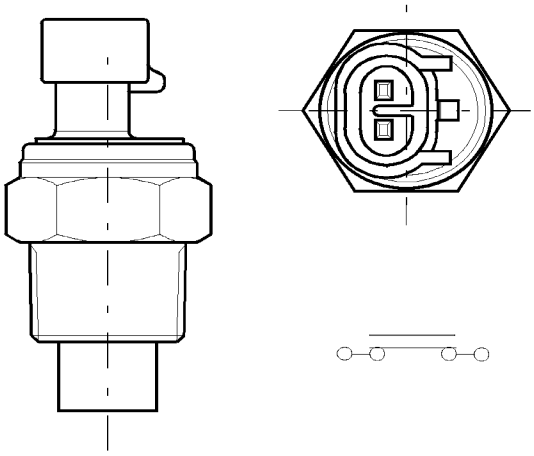

It is assembled to the cylinder head on the engine left hand side.

Specifications:

Working tensions:	12 ÷ 24 V
Electrical Power load:	2.5 A (induction) 5.0 A (resistance)
Setting:	32±2 °C Contact opening upon increasing temperature 22±2 °C Contact closure upon decreasing temperature

PREVIEW - YOUFIXTHIS.COM

Download full manual at youfixthis.com

TROUBLESHOOTING

Use a multimeter for the following tests.

1 – Battery

NOTE: *The battery must be at full charge and all connections clean and tight before any testing of the electrical system.*

2 – Alternator

The alternator is located on the front right-hand side of the engine.

Check Points	Reading	Possible Cause of Bad Reading
Check the 10 ampere fuse at location 5 in the fuse block.	Good	Bad fuse.
Terminal for wire 1A to ground	12 volts	Check wire 1A between the starter terminal and the alternator.
NOTE: *Turn the key switch to ON.*		
Terminal for wire 34 to ground	Approximately 10 volts	Check the wire between the alternator and the instrument cluster (18). Check the instrument cluster (18).
NOTE: *Make sure all electrical switches except the key switch are in the OFF position. Have another person start and run the engine at low idle.*		
Check for voltage at terminal for wire 1A.	Approximately 14 volts	Bad alternator. See Section 4007 of the Service Manual and repair the alternator.
NOTE: *Turn the work lamp switch to the ON position. (Continue to run the engine at low idle.)*		
Check for voltage at terminal for wire 1A.	More than 13 volts	Bad alternator. See Section 4007 of the Service Manual and repair the alternator.

3 – Chassis Ground

NOTE: *Make sure the connection is good for the chassis ground.*

4 – Starter and Starter Solenoid

The starter is located on the right rear side of the engine.

Check Points	Reading	Possible Cause of Bad Reading
Battery terminal of starter solenoid to ground	12 volts	Check the battery cable to the positive post of the battery.
NOTE: *Put the transmission control lever in Neutral. Have another person hold the key switch in the START position.*		
Terminal for wire 21B to ground	12 volts	Check the starter relay (10), neutral start relay (11) and the key switch (8).
NOTE: *If the readings are good, see Section 4004 and check the starter.*		

5 – Power Junction

Check Points	Reading	Possible Cause of Bad Reading
Terminal for wire 1B to ground	12 volts	Check the wire between the power junction and the battery.
NOTE: *Make sure the connection is good for the power junction.*		

PREVIEW - YOUFIXTHIS.COM

Download full manual at youfixthis.com

MAINTENANCE

Electrolyte Level

If the battery is a maintenance free battery, check the level of the electrolyte every 1000 hours of operation or six months, whichever occurs first. For all other batteries, check the level of the electrolyte every 250 hours of operation.

NOTE: *A maintenance free battery will have the words Maintenance Free on the decal on the top of the battery. If the center part of the decal has been removed for access to the battery caps, it is possible that the words Maintenance Free have been removed from the decal.*

Check the level of the electrolyte more often during hot weather. The use of a large amount of water by the battery can be caused by high battery temperature or a voltage regulator setting that is too high. Keep the electrolyte level above the top of the plates in the battery at all times to prevent damage to the battery.

NOTE: *On maintenance free batteries it is necessary to remove the center part of the decal for access to the battery caps. Do not discard the center part of the decal. Install the center part of the decal after the battery caps have been installed.*

If the level of the electrolyte is low, add distilled water or other clean water until the electrolyte is 5 mm (¼ inch) below the level of the ring. Do not add more water than is needed. Too much water can cause bad performance, a short service life, and corrosion around the battery.

NOTE: *Add water only. DO NOT add electrolyte.*

Inspecting and Cleaning a Battery

If damage causes an electrolyte leak, replace the battery.

Inspect the battery at regular intervals for dirt, corrosion, and damage. Electrolyte and dirt on the top of the battery can cause the battery to discharge by making a passage for the current to flow.

If the battery must be cleaned, remove the battery from the battery carrier and clean the battery, cable terminals, and the battery carrier. When available, use Case Battery Saver and Cleaner according to the instructions on the container. Case Battery Saver and Cleaner also helps prevent corrosion. If Case Battery Saver and Cleaner is not available, use baking soda and water as a cleaner. DO NOT permit any type of cleaner to enter the cells of the battery.

Install the battery in the machine and make sure the fasteners are tight. Apply Case Battery Saver and Cleaner or Urethane Seal Coat to the cable terminals to prevent corrosion. See the Parts Counter Catalog. DO NOT apply grease.

PREVIEW - YOUFIXTHIS.COM

Download full manual at youfixthis.com

SPECIFICATIONS

Bolts for steering cylinder	335 Nm (247 pound-feet)
Tie rod ball joint to steering cylinder	300 Nm (221 pound-feet)
Tie rod to steering knuckle	165 Nm (122 pound-feet)
Jam nut for tie rod	120 Nm (89 pound-feet)
Bolts for king pin	120 Nm (89 pound-feet)
Bolts for bearing caps	120 Nm (89 pound-feet)
Bearing cap plug	15 Nm (11 pound-feet)

PREVIEW - YOUFIXTHIS.COM

Download full manual at youfixthis.com

STEP 84

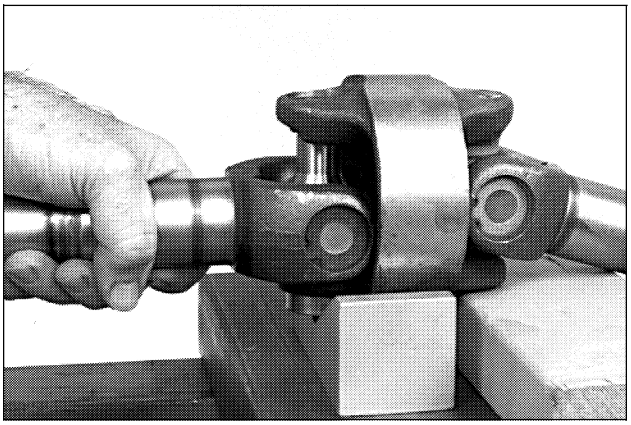

B9561088M

Carefully install the cross in the bearing cap.

STEP 85

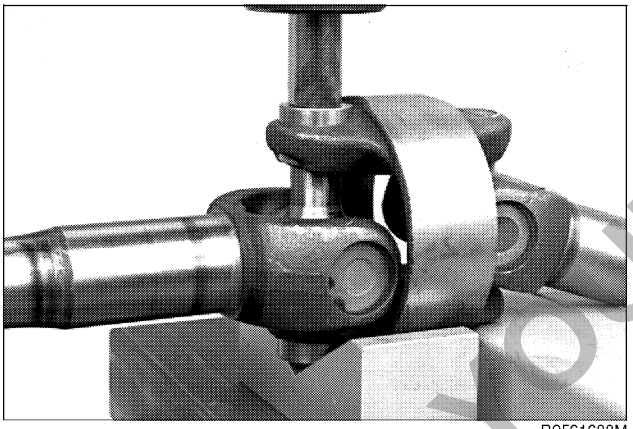

B9561688M

Use an acceptable driver and press the other bearing cap into the coupling 6 mm (1/4 inch) from the top of the coupling.

STEP 86

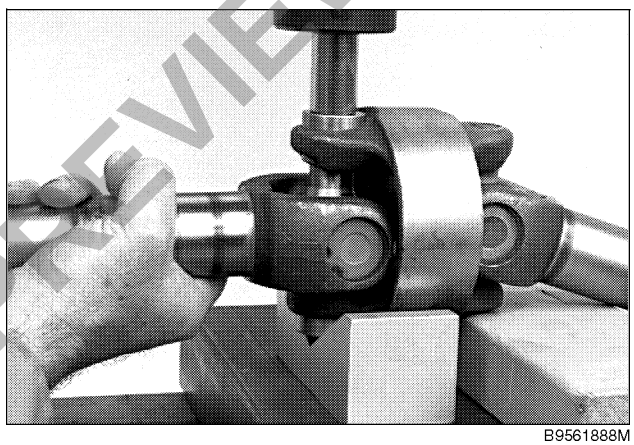

B9561888M

Carefully raise the cross into the top bearing cap so that the cross is in both bearing caps.

STEP 87

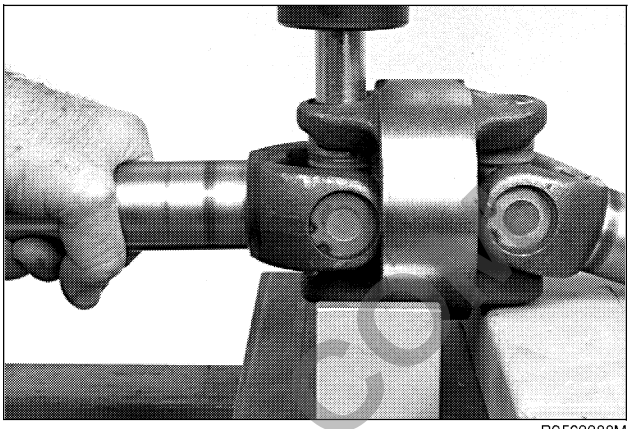

B9562288M

Hold the cross and press the bearing cap into the coupling so that a snap ring can be installed.

STEP 88

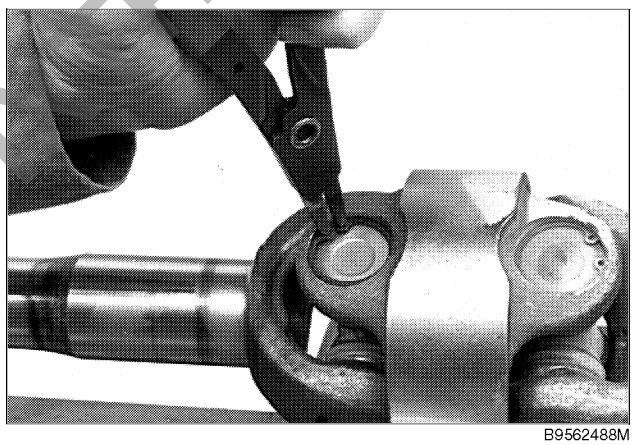

B9562488M

Install a snap ring.

STEP 89

Repeat steps 87 and 88 for the other bearing cap.

PREVIEW - YOUFIXTHIS.COM
Download full manual at youfixthis.com

SPECIAL TOOLS

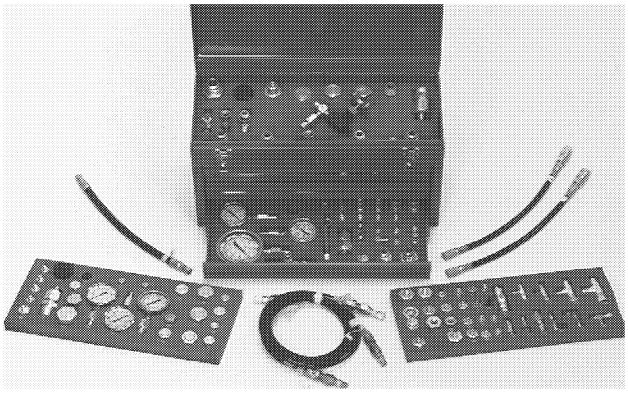

B877558U

CAS-1804 PRESSURE FITTING KIT

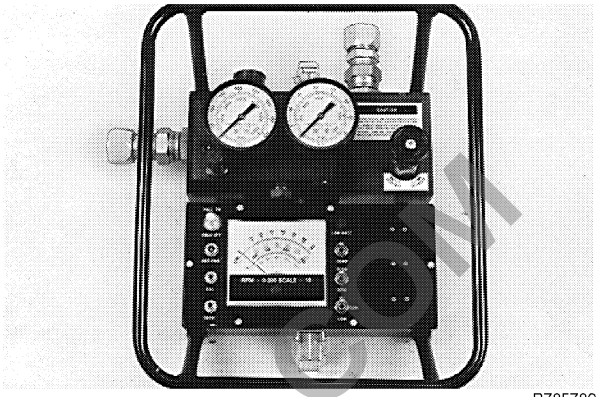

B785789M

CAS-10280 FLOWMETER

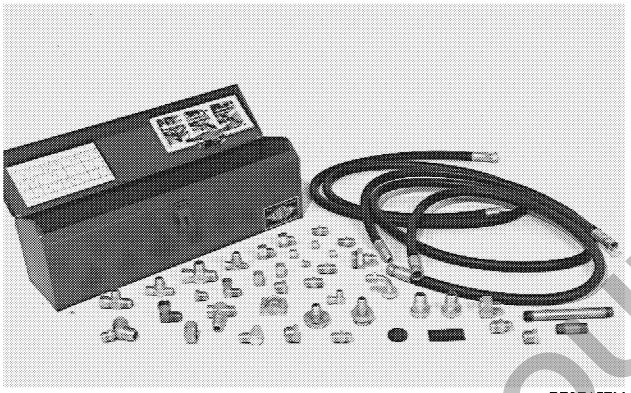

B797157M

CAS-1808 FLOWMETER FITTING KIT

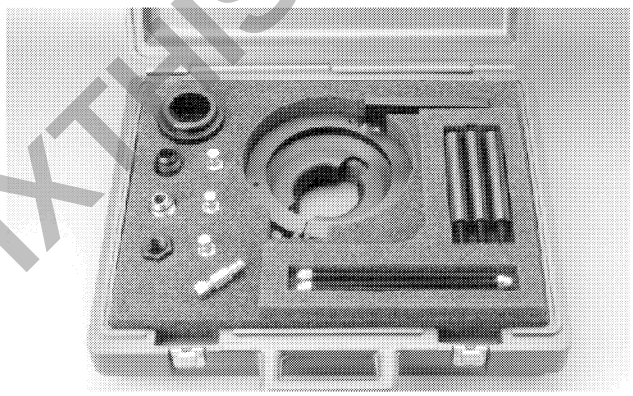

BP95G002

CAS-40033 TRANSMISSION TOOL KIT

PREVIEW - YOUFIXTHIS.COM

POWERSHIFT FUNCTION

The TCT16 (Transmission controller for T16000) takes care of all transmission related functions.

Download full manual at youfixthis.com

STEP 119

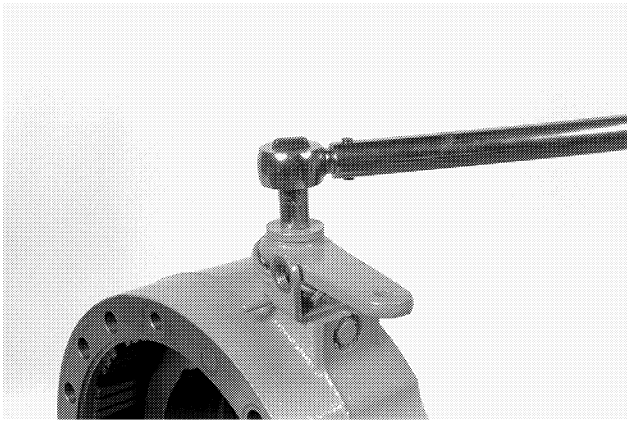

BK00C471

Install the washer and bolt. Tighten the bolt to a torque of 35 Nm (204 pound-inches).

NOTE: *Parking brake adjustment will be made after axle is assembled. Refer to page 76 in this section.*

STEP 120

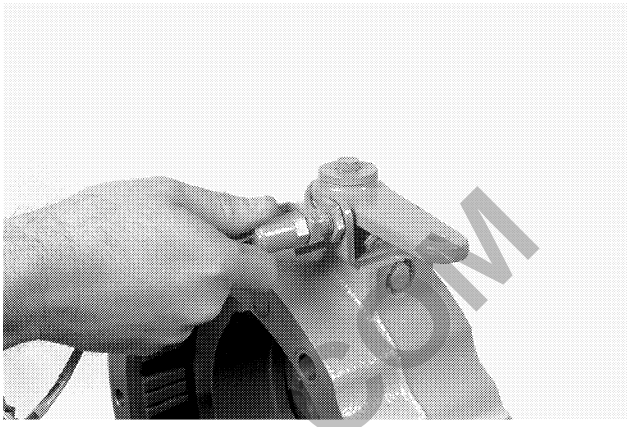

BK00C469

Install the brake light switch into the stop bracket.

STEP 121

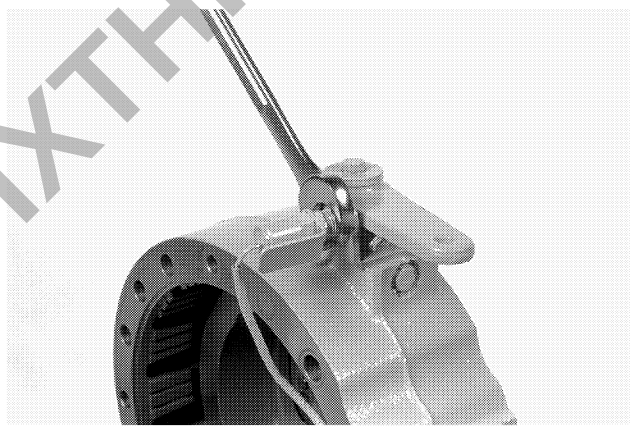

BK00C468

Tighten the jam nut on the brake light switch to hold the switch in place.

PREVIEW - YOUFIXTHIS.COM

Download full manual at youfixthis.com

STEP 171

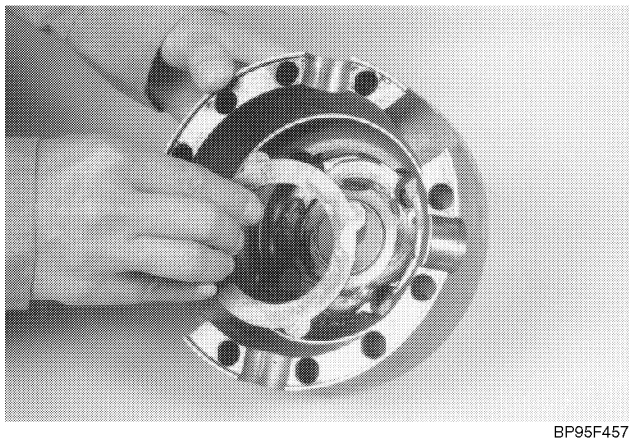

BP95F457

Put the differential case half without the dimples on the bench. Put grease in the bottom of the differential case half to hold the thrust washer in place when the thrust washer is installed. Install the thrust washer.

STEP 172C

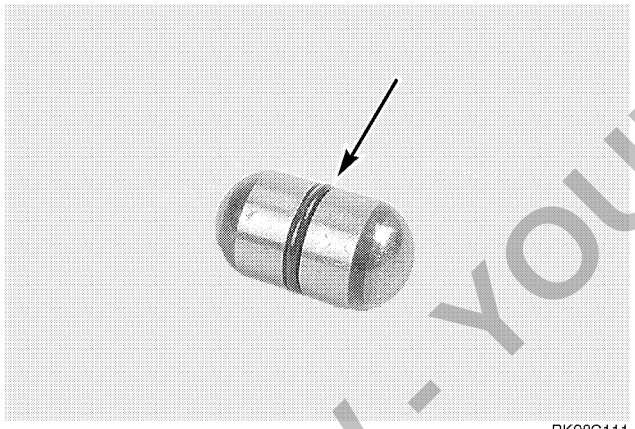

BK98C111

Install new O-rings on the pins. Lubricate the O-rings with MS1207.

STEP 173

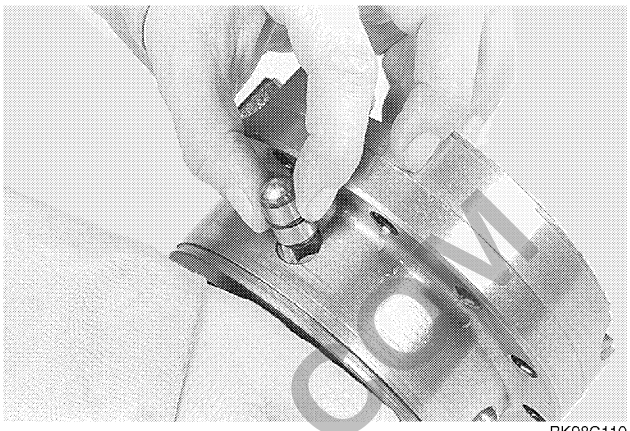

BK98C110

Install the pins in the differential case half.

NOTE: *The difference between the side pinion gears is the differential lock end side pinion gear has dimples in the side where the locking pins engage. The other gear does not.*

STEP 174

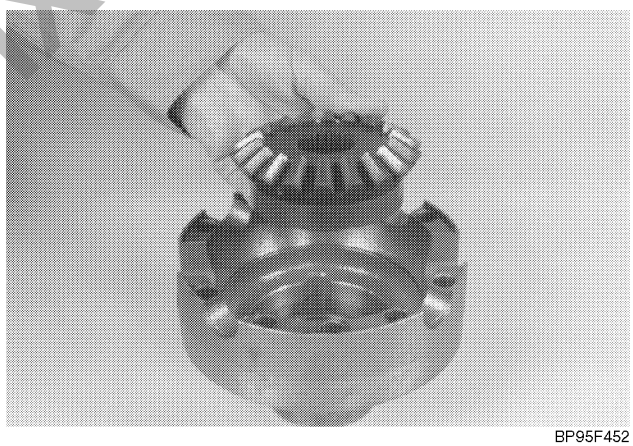

BP95F452

Lubricate the side pinion gears with MS1207. Install the bottom side pinion gear (without dimples).

STEP 175



BP95F450

Install the shafts and spider gears.

PREVIEW - YOUFIXTHIS.COM

Download full manual at youfixthis.com

STEP 254

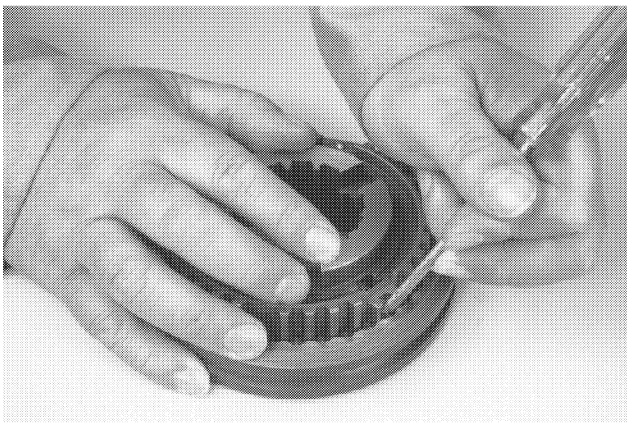

BP95F173

Use a punch or screwdriver to push the balls into the blocks and to push the blocks down so that the balls are on the flat faces of the teeth, but not into the detent grooves. When all the balls are in position, push the hub and the blocks down until the balls move into the detent groove.

STEP 255

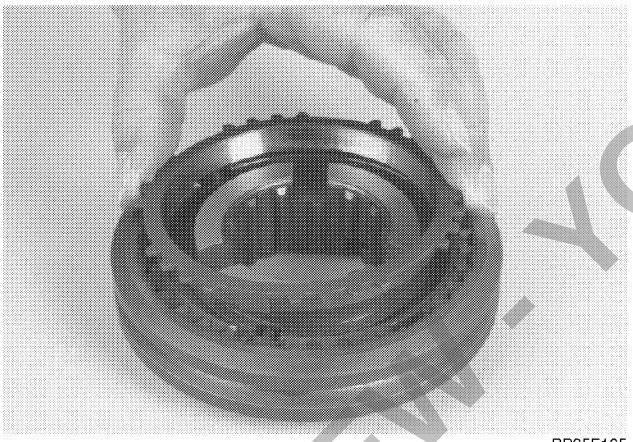

BP95F165

Install the tapered friction ring on the synchronizer assembly.

STEP 256

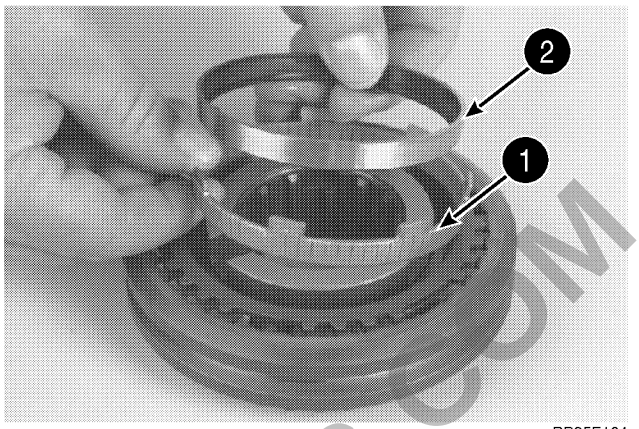

BP95F164

Use clean transmission oil to lubricate the bronze ring (1) and the steel ring (2). Install the bronze ring (1) and the steel ring (2) as shown.

STEP 257

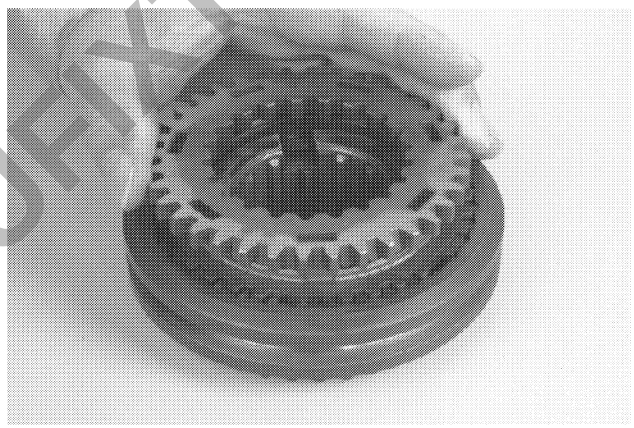

BP95F163

Install the synchronizer ring as shown. The flat sides of the teeth must be up.

PREVIEW - YOUFIXTHIS.COM

Download full manual at youfixthis.com

STEP 85

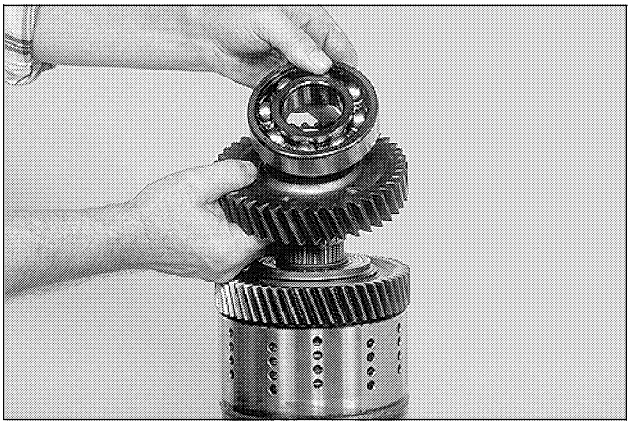

CK97D078

Remove the front bearing and gear.

STEP 86

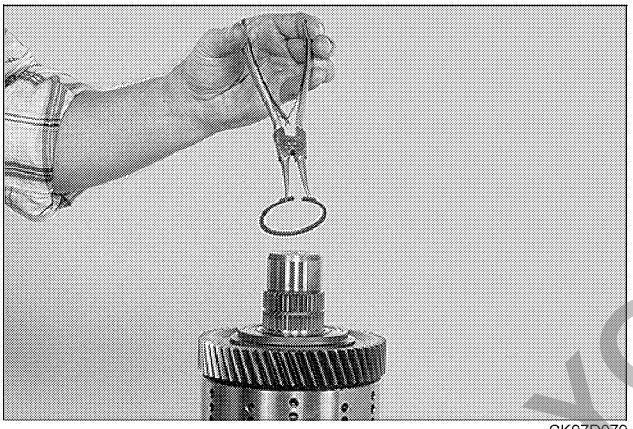

CK97D079

Remove the gear retainer ring.

STEP 87



CK97D080

Use a bearing puller to remove the clutch gear and outer bearing.

STEP 88



CK97D081

Clutch gear and outer bearing removed.

STEP 89



CK97D082

Remove the spacer snap ring.

STEP 90

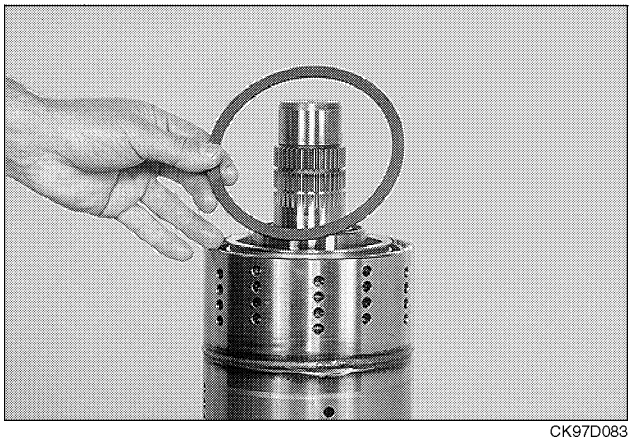

CK97D083

Remove the spacer.

PREVIEW - YOUFIXTHIS.COM

Download full manual at youfixthis.com

TABLE OF CONTENTS

REMOTE CONTROL VALVES 4
Removal 4
Installation 6
LOADER CONTROL VALVE 8
Removal 8
Installation 11
HYDRAULIC PUMP 15
Removal 15
Installation 17
PILOT COLTROLS BACKHOE VALVE 19
Removal 19
Installation 20
MECHANICAL CONTROLS BACKHOE VALVE 21
Removal 21
Installation 23

PREVIEW - YOUFIXTHIS.COM

Download full manual at youfixthis.com

Test 7o

- If equipped with bi-directional auxiliary hydraulics, unhook hydraulic quick disconnects or cap lines, hold the button in the out position. Record gpm (l/min) on line 7o on the check sheet.

Test 7p

- Reverse directions on the bi-directional valve. Record gpm (l/min) on line 7p on the check sheet.

NOTE: *If flow reading between test 6b and tests 7a through 7p varies more that 1 gpm (3.8 l/min) there is a problem in that circuit.*

Steering and Bucket Lock Valve Flow

- Open the flowmeter and stop the engine. Remove the caps and plugs and reconnect the auxiliary hydraulics.

NOTE: *Reconnecting hoses is only required for SM and SM+ machines. Refer to illustration on page 16.*

- Disconnect flowmeter inlet from port EF and place test adapter (2) on fitting.
- Disconnect hose from "T" fitting (10). Place a cap (7) onto the "T" fitting and connect the "CF" pressure hose (9) to the flowmeter inlet hose (8).

Test 8a

- Start and run engine at high idle close the load valve on the flowmeter. Record the pressure reading on line 8a on the check sheet.

NOTE: *A pressure reading of 200 to 250 psi (13.8 to 17.2 bar) should be obtained.*

Test 8b

- Turn the steering wheel full right and hold against the stop.
- Open the load restrictor on the flowmeter to a reading of 1000 psi (69 bar).
- Holding the steering wheel against the stop, slowly close the load valve observing the flowmeter.
- When the flow drops dramatically by several gpm (L/min) record the pressure on line 8b of the check sheet.

Test 8c

- Continue to close the load valve on the flowmeter observing the flow.
- When flow reaches 0 gpm (l/min), record the pressure on line 8c on the check sheet.
- Turn the steering wheel to the neutral position.

NOTE: *A pressure reading of 2050 to 2200 psi (141 to 152 bar) should be obtained.*

Test 8d

- Fully open the load valve on the flowmeter.

ATTENTION: *When performing the loader bucket or backhoe bucket coupler test, keep all personnel clear of the area.*

- Extend the backhoe bucket all the way to the dump position. Place the loader and the backhoe bucket on the ground.
- If equipped, engage the front or rear hydraulic coupler, slowly close the load valve on the flowmeter observing the flow.
- When the flow drops dramatically by several gpm (L/min) record the pressure on line 8d on the check sheet.

Test 8e

- Continue to close the load valve on the flowmeter observing the flow.
- When flow reaches 0 gpm (l/min), record the pressure on line 8e on the check sheet.

NOTE: *A pressure reading of 2700 to 2800 psi (186 to 193 bar) should be obtained. If pressure is not as specified adjust quick coupler relief valve.*

Steering and Bucket Lock Valve Leakage

- Holding the steering wheel against the left stop, close the load valve on the flowmeter to a reading of 1800 psi (124 bar), adjust engine rpm to 2000.

Test 9a

- Turn the steering wheel to full right. Record gpm (l/min) on line 9a on the check sheet.

Test 9b

- Turn the steering wheel to full left. Record gpm (l/min) on line 9b on the check sheet.

ATTENTION: *When performing the loader bucket or backhoe bucket coupler test, keep all personnel clear of the area.*

- Extend the backhoe bucket all the way to the dump position. Place the loader and the backhoe bucket on the ground.

Test 9c

- Retract the loader lock pins. Record gpm (l/min) on line 9c on the check sheet.

Test 9d

- Extend the loader lock pins. Record gpm (l/min) on line 9d on the check sheet.

Test 9e

- Retract the backhoe bucket lock pins. Record gpm (l/min) on line 9e on the check sheet.

PREVIEW - YOUFIXTHIS.COM
Download full manual at youfixthis.com

STEP 35

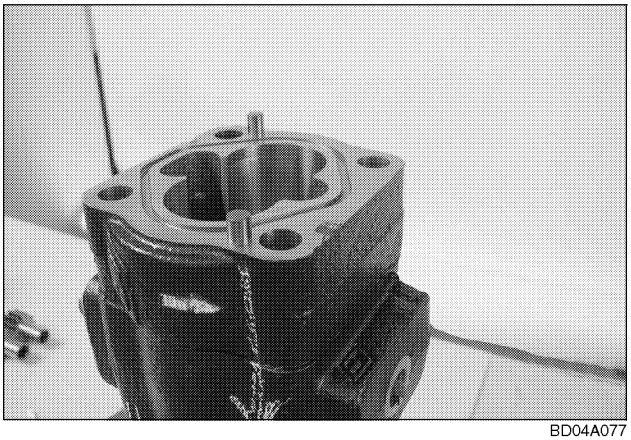

BD04A077

Install the closed end gear housing.

STEP 36

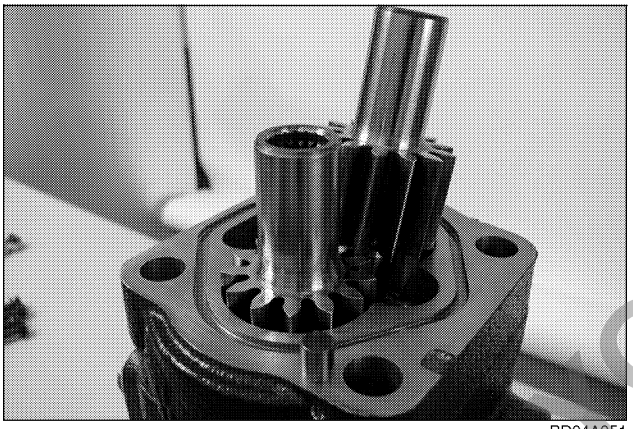

BD04A051

Install the drive and the driven gear.

STEP 37



BD04A050

Install the thrust plate so that the seal is up. The seal must be toward the outlet side of the hydraulic pump.

STEP 38

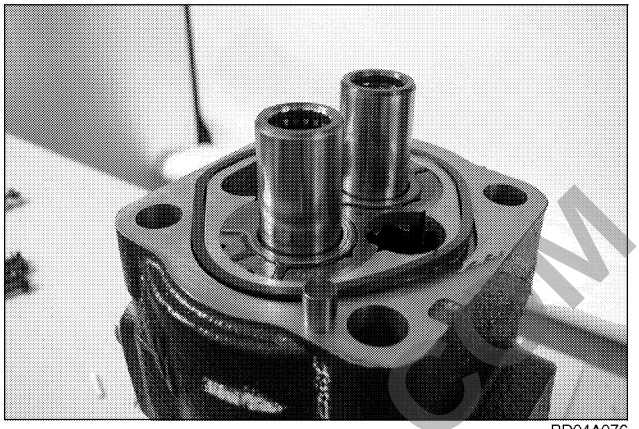

BD04A076

Install the quad ring.

STEP 39

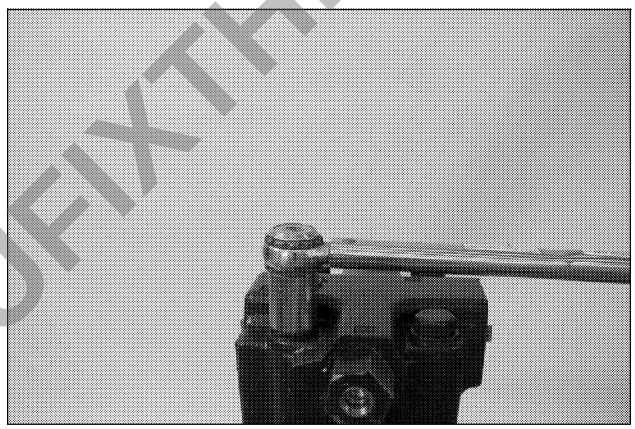

BD04A047

Install the closed end cover. Install the bolts and the flat washers. Tighten the bolts evenly to a torque of 250 lb-ft (339 Nm).

PREVIEW - YOUFIXTHIS.COM

Download full manual at youfixthis.com

Assembly

NOTE: *Refer to illustration page 10 and 12.*

1. Install the bushing (15) in the gland (3).
2. Install the buffer seal (16) in the gland (3). The side of the buffer seal (16) with the lip must be toward the small end of the gland (3).
3. Install the wide seal (17) in the gland (3). The wide seal (17) is to be installed so that the lips of the wide seal (17) are toward the small end of the gland (3). The wide seal (17) can be difficult to install. Use the tool shown on page 4.
4. Install a new wiper (18) in the gland (3). The lips of the wiper (18) must be toward the large end of the gland (3).
5. Install a new backup ring (14) in the groove on the outside of the gland (3). If both sides of the backup ring (14) are not flat, the side that is not flat must be toward the small end of the gland (3).
6. Install the O-ring (13) next to the backup ring (14) in the groove on the outside of the gland (3). The O-ring (13) must be toward the small end of the gland (3).
7. Fasten the piston rod eye (5) in the vise.
8. Remove any marks and sharp edges on the chamfer at the end of the piston rod (6).
9. Lubricate the bore of the gland (3) and the piston rod (6) with clean oil.
10. Push the gland (3) onto the piston rod (6). If necessary, use a soft hammer to drive the gland (3) onto the piston rod (6).
11. Put a support below and near the end of the piston rod (6). Use a shop cloth between the support and the piston rod (6) to prevent damage to the piston (4).
12. Put the piston (4) on the end of the piston rod (6).
13. Clean the threads on the end of the piston rod and the threads of the bolt using Loctite cleaning solvent. Allow to dry. Apply Loctite 243 to the piston rod threads 6.35 mm (1/4 inch) from the open end of the piston rod so that there is 12.7 mm (1/2 inch) of Loctite 243 on the piston rod threads. DO NOT apply Loctite to the first 6.35 mm (1/4 inch) of the piston rod threads.
14. Install the bolt (7). Tighten the bolt (7) to the torque value on page 3 for the cylinder that is being repaired. A torque multiplier can be used to help tighten the bolt (7).
15. Install a new wear ring (11) in the groove in the center of the piston (4).
16. Install a new seal (9) in the groove on the outside end of the piston (4). The seal (9) must be in the groove at the end of the piston (4) with the large bore.
17. Install a backup ring (10) over the seal (9) on the piston (4).
18. Install the piston ring (12) in the remaining groove in the outside of the piston (4).
19. Fasten the tube (1) in a vise or other holding equipment. Be careful to prevent damage to the tube (1).
20. Lubricate the inside of the tube (1) and the piston (4) with clean oil.
21. Push the piston (4) straight into the tube (1).
22. When the piston (4) is in the smooth part of the tube (1), start the gland (3) into the tube (1).
23. Lubricate the O-ring (13) on the gland (3) with clean oil.
24. Tighten the gland (3) to 135 to 542 Nm (100 to 400 pound-feet). If the lock screw (2) holes become aligned in this torque range, install the lock screw (2). Tighten the lock screw (2) to 2.3 Nm (20 pound-inches). If the lock screw (2) holes are not aligned, do steps 26 through 28.
25. Tighten the gland (3) to 135 to 542 Nm (100 to 400 pound-feet).
26. Use a No. 26 drill and drill a hole half in the gland (3) and half in the tube (1). Drill to a depth of 11 mm (7/16 inch). Do not drill in line with a hole in the gland (3) for the gland wrench.
27. Install the lock screw (2). Tighten the lock screw (2) to 2.3 Nm (20 pound-inches).
28. If the hoses were removed with the cylinder, install new O-rings, if equipped, on the hose fittings. Lubricate the O-rings with clean oil. Install the hoses.

PREVIEW - YOUFIXTHIS.COM

Download full manual at youfixthis.com

Inspection

STEP 12

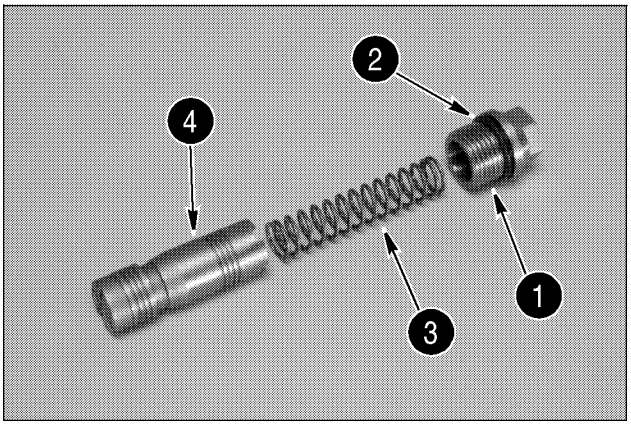

BD01B228

1. PLUG
2. O-RING
3. SPRING
4. CROSSOVER SPOOL

Inspect the parts of the crossover spool assembly. Replace the O-ring on the plug. Replace parts as required.

STEP 13

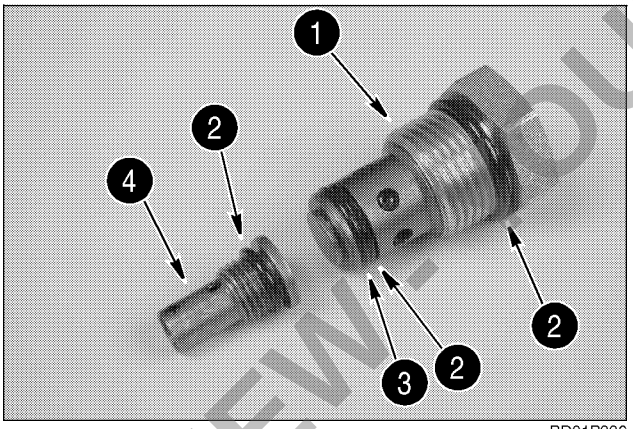

BD01B226

1. INLINE CHECK VALVE
2. O-RING
3. BACKUP RING
4. INTERNAL INLINE CHECK VALVE

Inspect the parts of the inline check valve and internal inline check valve. Replace the O-rings and backup ring. Use new parts as required.

STEP 14

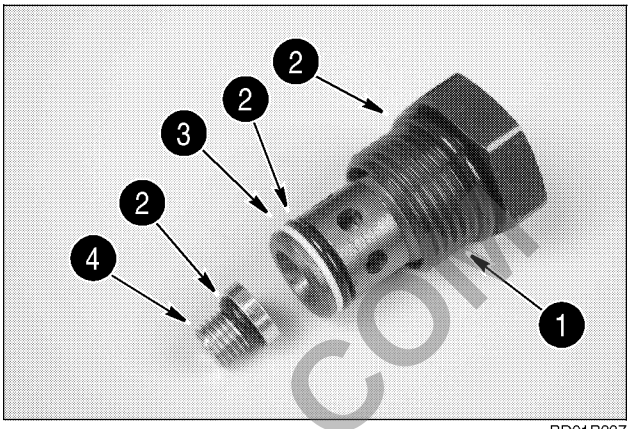

BD01B227

1. ORIFICE CHECK VALVE
2. O-RING
3. BACKUP RING
4. ORIFICE PLUG

Inspect the parts of the orifice check valve and orifice plug. Replace the O-rings and backup ring. Use new parts as required.

STEP 15

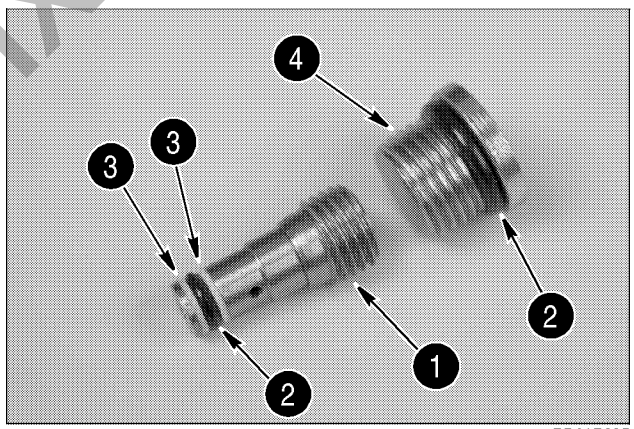

BD01B225

1. BI-DIRECTIONAL CHECK VALVE
2. O-RING
3. BACKUP RING
4. PLUG

Inspect the parts of the bi-directional check valve and plug. Replace the O-rings and backup ring. Use new parts as required.

PREVIEW - YOUFIXTHIS.COM

Download full manual at youfixthis.com

STEP 6

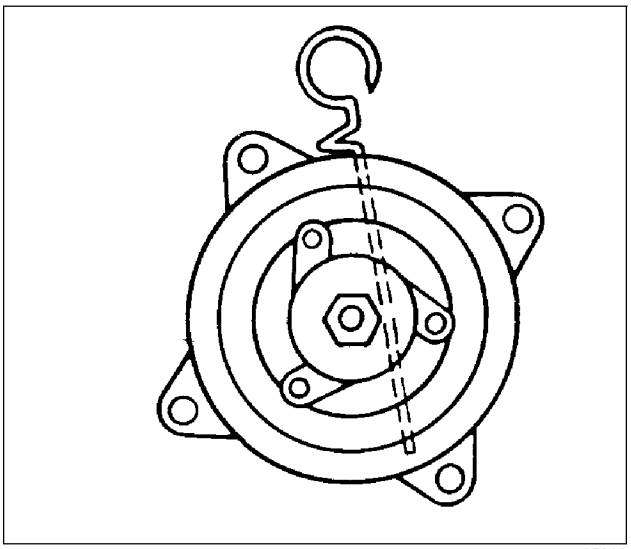

85010

Put the dipstick in the oil filler hole to the stop position. Make sure the dipstick is inserted all the way to the stop.

NOTE: *The illustration shows the front view of the compressor with the dust cover removed.*

STEP 7

Remove the dipstick. Count the oil level marks on the dipstick. Use the following table to find the correct oil level for the mounting angle of the compressor.

COMPRESSOR OIL LEVELS

MOUNTING ANGLE (DEGREES)	DIPSTICK READING
0	4 to 6
10	6 to 8
20	7 to 9
30	8 to 10
40	9 to 11
50	9 to 11
60	9 to 12
90	9 to 12

STEP 8

If the oil level is not correct, add or subtract oil to the correct level as shown in the above chart.

IMPORTANT: *Use only SP-15 PAG oil.*

STEP 9

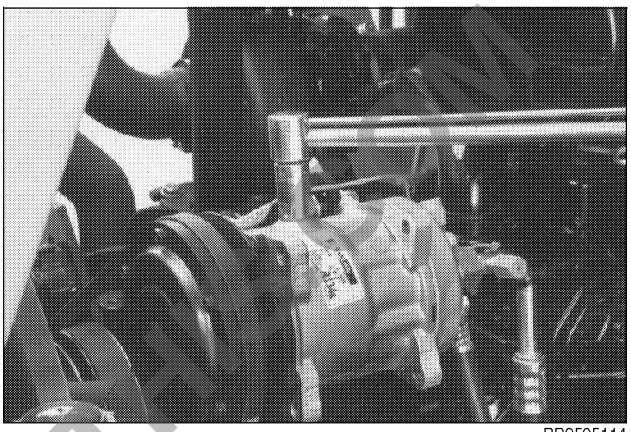

BP9505114

Install a new O-ring on the oil filler plug. Install the plug and tighten to a torque of 11 to 18 pound-feet (15 to 24 Nm).

PREVIEW - YOUFIXTHIS.COM

Download full manual at youfixthis.com

CUTTING EDGES

Universal and Heavy Duty Buckets

Replacing Bottom Cutting Edge

1. Remove the bucket teeth. Use carbon arc rod or an acetylene cutting torch to remove the welds.

IMPORTANT: *When you remove the bottom weld at the rear of the bottom cutting edge, DO NOT cut through the bottom of the bucket.*

2. Use carbon arc rod or an acetylene cutting torch to remove the welds that hold the bottom cutting edge.
3. Use a grinder to remove any welds or extra metal still on the bucket so that the new bottom cutting edge will fit the bucket.
4. Put the new bottom cutting edge in position and make several tack welds to hold it.
5. See the following illustration for the weld locations and specifications. DO NOT make any welds on the inside of the bucket except the bottom of the bucket to the bottom cutting edge. Use E7018 welding rod to weld the bottom cutting edge in position.

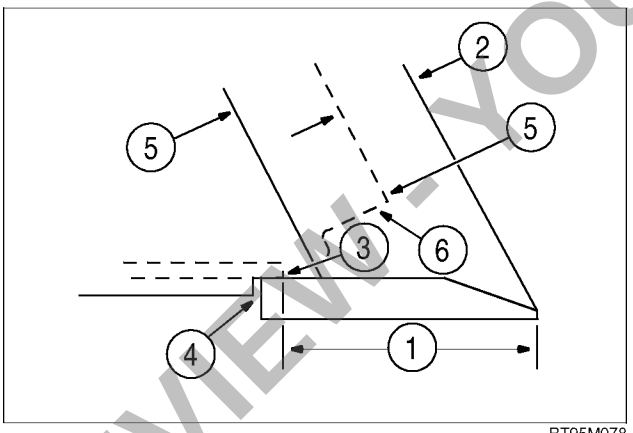

BT95M078

1. UNIVERSAL BUCKET - 147 MM (5.79 INCHES)
   HEAVY DUTY BUCKET - 151 MM (5-15/16 INCHES)
2. UNIVERSAL BUCKET - 44 MM (1.73 INCH)
   HEAVY DUTY BUCKET - 47 MM (1-7/8 INCH)
3. 10 MM (3/8 INCH) FILLET TOP AND BOTTOM
4. FILL GROOVE BETWEEN WEAR PLATES AND BOTTOM CUTTING EDGE
5. 6 MM (1/4 INCH) FILLET ALL AROUND
6. TWO PASS 6 MM (1/4 INCH) WELD TO FILL VOID

6. See the following illustration. Install the corner bucket teeth and weld the bucket teeth in position. Use E7018 welding rod.

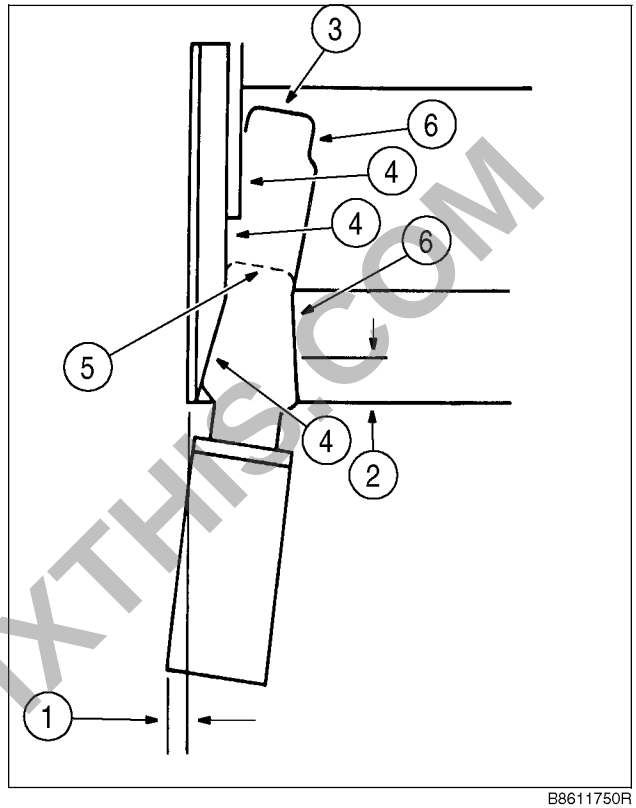

B8611750R

1. 14 MM (9/16 INCH)
2. 20 MM (3/4 INCH) NO WELD
3. NO WELD, TOP ONLY
4. FIRST WELD. 10 MM (3/8 INCH) FLARE BEVEL WELD.
   SECOND WELD. 10 MM (3/8 INCH) FILLET WELD.
5. BOTTOM ALL AROUND 8 MM (3/4 INCH) FILLET. WELD TWO TIMES.
6. 8 MM (5/16 INCH) FILLET. WELD TWO TIMES.

7. Weld the remaining bucket teeth to the bottom cutting edge according to the instructions in this section.

Replacing Side Cutting Edge

1. Use carbon arc rod or an acetylene cutting torch to remove the welds that hold the side cutting edge.
2. Use a grinder to remove any welds or extra metal still on the bucket so that the new side cutting edge will fit the bucket.
3. Use E7018 welding rod to weld the side cutting edge to the bucket with a 6 mm (1/4 inch) fillet all around the side cutting edge.

PREVIEW - YOUFIXTHIS.COM

Download full manual at youfixthis.com

PREVIEW ONLY

You're viewing 25 of 1713 pages

The full manual includes:

- All 1713 pages, complete
- Searchable PDF (find any keyword)
- No watermarks
- Instant download
- Print-ready quality

GET FULL MANUAL NOW

Case 580M, 580SM, 580SM+, 590SM Series 2 Service Manual

Scan or click anywhere
youfixthis.com

Click anywhere on this page to get the full manual