585G/586G/588G Forklift
Service Manual
7-14851

Table of Contents

Description	Section No.	Form No.
General	**Tab 1**	
Section Index - General		7-15500
Standard Torque Specifications	1001	8-71601
Fluids and Lubricants	1002	7-15160
Loctite Product Chart		8-98900
Engines	**Tab 2**	
Section Index - Engines		7-15510
Engine Removal and Installation	2000	7-15520
Stall Test	2001	7-15170
Electrical	**Tab 4**	
Section Index - Electrical		7-15530
Removal and Installation of Electrical Components	4000	7-15540
Electrical Specifications and Troubleshooting	4001	7-14860
Batteries	4003	7-49440
Starter Motor - Denso	4003	7-11450
Instrument Cluster	4005	7-49560
Alternator	4007	7-49250
Steering	**Tab 5**	
Section Index - Steering		7-15550
Removal and Installation of Steering Components	5000	7-15560
Steering Specifications, Pressure Checks and Troubleshooting	5001	7-15180
Steering Control Valve	5002	7-15570
Steering Cylinders	5003	7-11930
Steering Axle - Two Wheel Drive	5005	7-15310
Steering Axle - Four Wheel Drive	5006	7-15320

PREVIEW - YOUFIXTHIS.COM

Reprinted

CASE CORPORATION
700 State Street
Racine, WI 53404 U.S.A.

CASE CANADA CORPORATION
450 Sherman Avenue
Hamilton, ON L8N 4C4 CANADA

Bur 7-15491

© 2000 Case Corporation
Printed in U.S.A.
June, 1999 (Revised March, 2000)

Download full manual at youfixthis.com

TABLE OF CONTENTS

TORQUE SPECIFICATIONS - DECIMAL HARDWARE 2

TORQUE SPECIFICATIONS - METRIC HARDWARE 3

TORQUE SPECIFICATIONS - STEEL HYDRAULIC FITTINGS 4

TORQUE SPECIFICATIONS - STEEL HYDRAULIC FITTINGS 5

TORQUE SPECIFICATIONS - DECIMAL HARDWARE

Use the torques in this chart when special torques are not given. These torques apply to fasteners with both UNC and UNF threads as received from suppliers dry, or when lubricated with engine oil. Not applicable if special graphities, Molydisulfide greases, or other extreme pressure lubricants are used.

Grade 5 Bolts, Nuts, and Studs



Size	Pound-Inches	Newton metres
1/4 inch	108 to 132	12 to 15
5/16 inch	204 to 252	23 to 28
3/8 inch	420 to 504	48 to 57
Size	**Pound-Feet**	**Newton metres**
7/16 inch	54 to 64	73 to 87
1/2 inch	80 to 96	109 to 130
9/16 inch	110 to 132	149 to 179
5/8 inch	150 to 180	203 to 244
3/4 inch	270 to 324	366 to 439
7/8 inch	400 to 480	542 to 651
1.0 inch	580 to 696	787 to 944
1-1/8 inch	800 to 880	1085 to 1193
1-1/4 inch	1120 to 1240	1519 to 1681
1-3/8 inch	1460 to 1680	1980 to 2278
1-1/2 inch	1940 to 2200	2631 to 2983

Grade 8 Bolts, Nuts, and Studs



Size	Pound-Inches	Newton metres
1/4 inch	144 to 180	16 to 20
5/16 inch	288 to 348	33 to 39
3/8 inch	540 to 648	61 to 73
Size	**Pound-Feet**	**Newton metres**
7/16 inch	70 to 84	95 to 114
1/2 inch	110 to 132	149 to 179
9/16 inch	160 to 192	217 to 260
5/8 inch	220 to 264	298 to 358
3/4 inch	380 to 456	515 to 618
7/8 inch	600 to 720	814 to 976
1.0 inch	900 to 1080	1220 to 1465
1-1/8 inch	1280 to 1440	1736 to 1953
1-1/4 inch	1820 to 2000	2468 to 2712
1-3/8 inch	2380 to 2720	3227 to 3688
1-1/2 inch	3160 to 3560	4285 to 4827

NOTE: *Use thick nuts with Grade 8 bolts.*

PREVIEW - YOUFIXTHIS.COM

Retyped November,

Rac 8-71601 Issued 11-91 Printed in U.S.A

Download full manual at youfixthis.com

CAPACITIES AND LUBRICANTS

Engine Oil
- Capacity with Filter Change ..... 11 litres (11.6 U.S. quarts)
- Capacity without Filter Change ..... 10 litres (10.6 U.S. quarts)
- Type of oil ..... See Engine Oil Recommendations on page 4

Engine Cooling System
- Capacity ..... 15.8 litres (16.7 U.S. quarts)
- Type of coolant ..... Ethylene Glycol type antifreeze and water that is mixed 50% Ethylene Glycol and 50% water.

Fuel Tank
- Capacity ..... 117 litres (31 U.S. gallons)
- Type of fuel ..... See diesel fuel specifications on page 5

Hydraulic System
- Hydraulic reservoir refill capacity with filter change ..... 54.9 litres (58 U.S. quarts)
- Hydraulic reservoir refill capacity without filter change ..... 53 litres (56 U.S. quarts)
- Total System Capacity ..... 68.1 litres (72 U.S. quarts)
- Type of oil ..... Case TCH Fluid

Transmission
- 2 Wheel Drive
  - Total System ..... 18 litres (19 U.S. quarts)
  - Refill with or without filter ..... 16 litres (16.9 U.S. quarts)
  - Type of oil ..... Case Hy Tran Plus® (MS1207)
- 4 Wheel Drive
  - Total System ..... 20.8 litres (22 U.S. quarts)
  - Refill with or without filter ..... 18.5 litres (19.5 U.S. quarts)
  - Type of oil ..... Case Hy Tran Plus® (MS1207)

Front Axle - Drive
- Capacity of center bowl ..... 14.2 litres (15 U.S. quarts)
- Capacity of planetary (each) ..... 1.5 litres (1.6 U.S. quarts)
- Type of oil ..... Case Hy-Tran Plus® (MS 1207)

Rear Axle - Steer - 4wd
- Capacity of center bowl ..... 5.5 litres (5.8 U.S. quarts)
- Capacity of planetary (each) ..... 0.7 litres (0.7 U.S. quart)
- Type of oil ..... Case Hy-Tran Plus® (MS 1207)

Brake Fluid ..... Case TCH fluid

PREVIEW - YOUFIXTHIS.COM

Download full manual at youfixthis.com

TEST PROCEDURE

1. Prepare the machine for the stall test according to instructions in this section.
2. Heat the oil according to instructions in this section.
3. Apply the parking brake and start the engine.
4. With the engine running at full throttle, hold the tilt control lever in the BACK position and read the tachometer. Write the reading on line 1 on the check sheet.
5. Decrease the engine speed to low idle.
6. Move the transmission control lever to fourth gear and the direction control lever to foward.
7. Slowly increase the engine speed to full throttle and read the tachometer. Write the reading on line 2 on the check sheet.
8. With the transmission control lever in fourth gear, the direction control lever in FORWARD, and the engine running at full throttle, hold the tilt control lever in the BACK position and read the tachometer. Write the reading on line 3 on the check sheet.
9. Decrease the engine speed to low idle (two minutes with turbocharger) and stop the engine.
10. See the check sheet to understand the results of the stall test.

CHECK SHEET - 585G and 586G NA Emissions Engine

1. _____ (2320 to 2410 specified) rpm (r/min) hydraulic stall speed
2. _____ (2250 to 2330 specified) rpm (r/min) torque converter stall speed
3. _____ (1650 to 2000 specified) rpm (r/min) hydraulic and torque converter stall speed

rpm (r/min)	
1. 2320 to 2410 2. 2250 to 2330 3. 1650 to 2000	Torque converter, transmission, hydraulic system and engine are probably good.
1. Above 2410 2. Above 2330 3. Above 2000	Engine problem. Check engine speeds. See specifications in Section 9001. Check the timing of the fuel injection pump according to the instructions in section 3410.
1. Below 2320 2. Below 2250 3. Below 1650	Engine problem. Check engine speeds according to instructions in Section 9001. Check the timing of the fuel injection pump according to the instructions in Section 3410. Replace the fuel and air filters.
1. Below 2320 2. 2250 to 2330 3. Below 1650	Hydraulic system problem(s). See section 8002. Check the setting of the main relief valve. Check the output of the hydraulic pump.
1. Above 2410 2. 2250 to 2330 3. Above 2000	Hydraulic system problem(s). See section 8002. Check the setting of the main relief valve. Check the output of the hydraulic pump. Check for leakage in the loader control valve.
1. 2320 to 2410 2. Above 2330 3. Above 2000	Torque converter or transmission problems. See Section 6002 and check the transmission and torque converter.
1. 2320 to 2410 2. Below 2250 3. Below 1650	Torque converter or transmission problems. See Section 6002 and check the transmission and torque converter.

PREVIEW - YOUFIXTHIS.COM
Download full manual at youfixthis.com

FUSE AND RELAY LOCATION

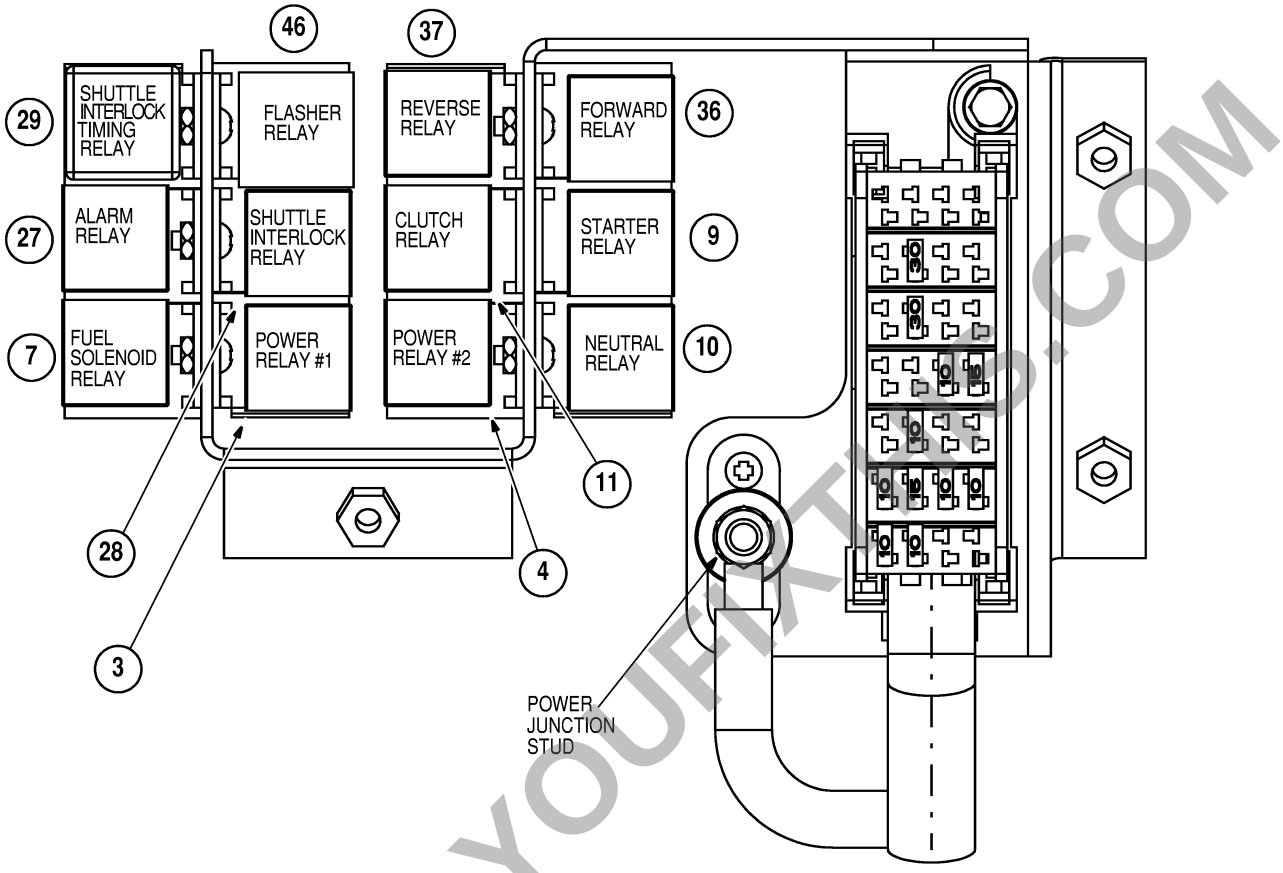

	1 & 2	3 & 4	5 & 6	7 & 8	9 & 10	11 & 12	13 & 14
D	**10 AMP** - STARTING & CLUTCH RELAY, SHUTTLE INTERLOCK TIMING RELAY	**10 AMP** - INSTRUMENTS & ALARM SYS.	----	----	----	----	----
C	**10 AMP** - ACC BATT (+) (OPTIONAL)	**15 AMP** - SIGNAL LAMPS, DIFFERENTIAL LOCK	**10 AMP** - REAR WORK LAMPS	SPARE	**30 AMP** - POWER OUTLET	**30 AMP** - POWER OUTLET	----
B	**10 AMP** - (BATT) (OPTIONAL)	**10 AMP** - HORN	SPARE	SPARE	SPARE	----	----
A	SPARE	**10 AMP** - 4WD (OPTIONAL)	SPARE	**15 AMP** - DRIVING LAMPS	SPARE	----	----

NOTE: *The numbers above the table and the letters to the left of the table correspond with those on the fuse block in the machine.*

PREVIEW - YOUFIXTHIS.COM
Download full manual at youfixthis.com

STARTER

Removal

NOTE: *The starter is located on the engine flywheel housing.*

1. Park the machine on a level surface and apply the parking brake.
2. Loser the forks to the floor.
3. Stop the engine.
4. Remove the bolts and washers that fasten the battery cover to the left side of the machine by the step.
5. Remove the battery cover.
6. If the machine has only one battery (1), disconnect the negative ground strap (2) from the battery (1), see the illustration on page 4.
7. If the machine has two batteries:
   A. Remove the terminal nut (3) and jumper cable (4) from the battery (1), see the illustration on page 4.
   B. Remove the negative ground strap (2) from the battery (1) and move the negative ground strap (2) away from the battery (1).
   C. Make sure the jumper cable (4) is installed on the battery (1) and put the terminal nut (3) on the battery (1).
8. Open the access door on the left side of the engine.
9. Fasten identification tags to the wires and cables. Disconnect the wires and cables from the terminals (2) on the starter (1), see the illustration on page 5.
10. Remove the two bolts (3) that fasten the starter (1) to the flywheel housing.
11. Remove the starter (1).

Installation

1. Put the starter (1) in place on the flywheel housing, see the illustration on page 5.
2. Install the bolts (3) that fasten the starter (1) to the flywheel housing. Make sure the ground cable is installed under the upper bolt.
3. Connect the wires and cables to the terminals (2) on the starter (1).
4. Close the access door.
5. If the machine has only one battery, connect the negative ground strap (2) to the battery (1), see the illustration on page 4.
6. If the machine has two batteries:
   A. Remove the terminal nut (3) and jumper cable (4) from the battery (1), see the illustration on page 4.
   B. Install the negative ground strap (2) on the battery (1).
   C. Install the jumper cable (4) and terminal nut (3) on the battery (1).
7. Install the battery cover.
8. Install the washers and bolts that fasten the battery cover to the machine.

PREVIEW - YOUFIXTHIS.COM

Download full manual at youfixthis.com

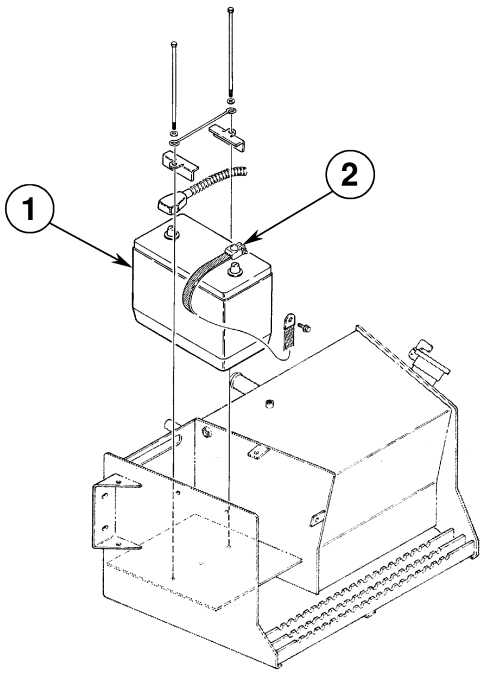

GS99A403

1. BATTERY
2. NEGATIVE GROUND STRAP

NEGATIVE GROUND STRAP REMOVAL AND INSTALLATION FOR A SINGLE BATTERY

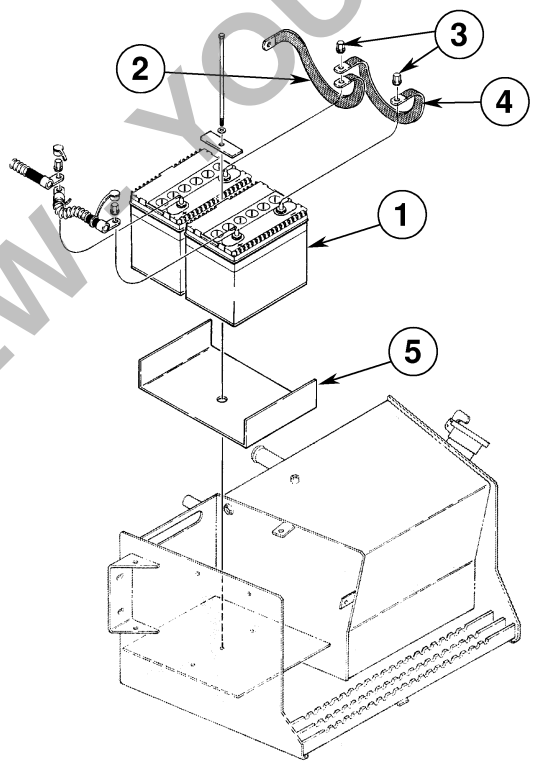

GS99A404

1. BATTERY
2. NEGATIVE GROUND STRAP
3. TERMINAL NUT
4. JUMPER CABLE
5. MOUNTING PLATE, IF USED

NEGATIVE GROUND STRAP REMOVAL AND INSTALLATION FOR A DOUBLE BATTERY

PREVIEW YOUFIXTHIS.COM
Download full manual at youfixthis.com

HYDRAULIC SCHEMATIC

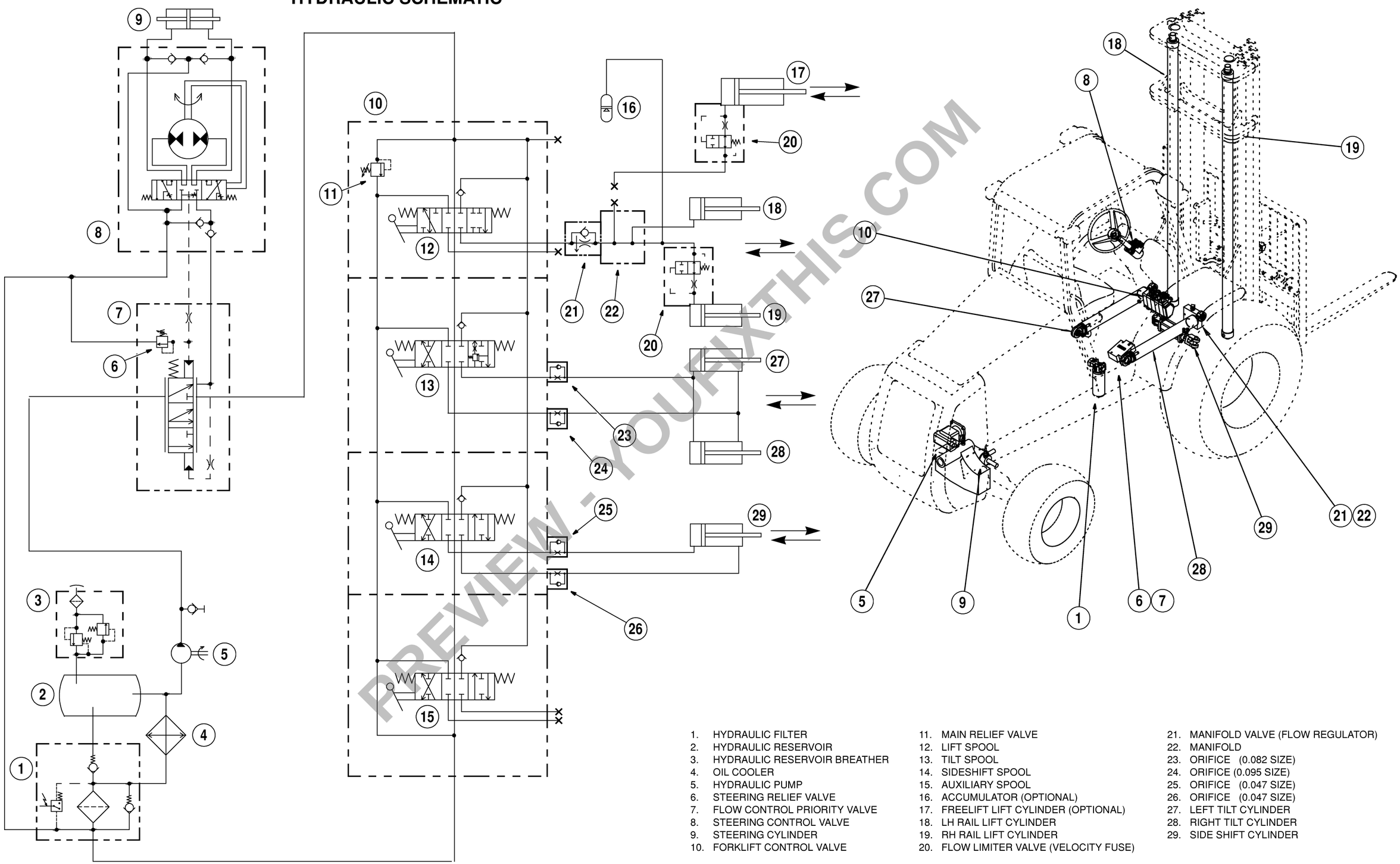

1. HYDRAULIC FILTER
2. HYDRAULIC RESERVOIR
3. HYDRAULIC RESERVOIR BREATHER
4. OIL COOLER
5. HYDRAULIC PUMP
6. STEERING RELIEF VALVE
7. FLOW CONTROL PRIORITY VALVE
8. STEERING CONTROL VALVE
9. STEERING CYLINDER
10. FORKLIFT CONTROL VALVE
11. MAIN RELIEF VALVE
12. LIFT SPOOL
13. TILT SPOOL
14. SIDESHIFT SPOOL
15. AUXILIARY SPOOL
16. ACCUMULATOR (OPTIONAL)
17. FREELIFT LIFT CYLINDER (OPTIONAL)
18. LH RAIL LIFT CYLINDER
19. RH RAIL LIFT CYLINDER
20. FLOW LIMITER VALVE (VELOCITY FUSE)
21. MANIFOLD VALVE (FLOW REGULATOR)
22. MANIFOLD
23. ORIFICE (0.082 SIZE)
24. ORIFICE (0.095 SIZE)
25. ORIFICE (0.047 SIZE)
26. ORIFICE (0.047 SIZE)
27. LEFT TILT CYLINDER
28. RIGHT TILT CYLINDER
29. SIDE SHIFT CYLINDER

PREVIEW - YOUFIXTHIS.COM
Download full manual at youfixthis.com

PREVIEW - YOUFIXTHIS.COM

Download full manual at youfixthis.com

Section

4000

REMOVAL AND INSTALLATION OF ELECTRICAL COMPONENTS

PREVIEW - YOUFIXTHIS.COM

CASE CORPORATION
700 State Street
Racine, WI 53404 U.S.A.

CASE CANADA CORPORATION
450 Sherman Avenue
Hamilton, ON L8N 4C4 CANADA

Bur 7-15540

© 1999 Case Corporation
Printed in U.S.A.
June, 1999

Download full manual at youfixthis.com

Capacity (Load) Test

This test can be done using a variable load tester such as the Sun Electric VAT-33. Other test equipment can be used. Connect the test equipment according to the instructions of the manufacturer of the equipment.

1. The level of charge of the battery must be at least 75%. Do the Specific Gravity Check in this section.

2. Prepare the tester (Sun Electric VAT-33 shown) for the test.

   A. Select the voltmeter range that will measure 1 to 18 volts.

   B. Make sure the load control knob is in the OFF position.

   C. Select the ammeter range that will measure 0 to 1000 amperes.

   D. Move the volt lead switch to the INT. position.

3. Connect the tester to the battery as shown.

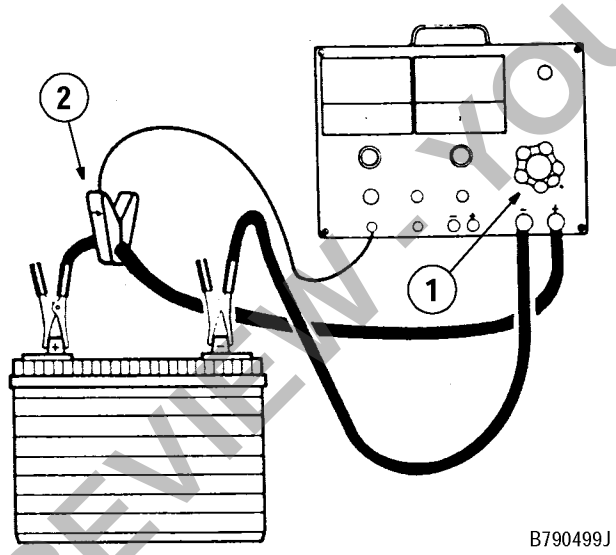

B790499J

1. Load Control Knob *2. Ammeter Clamp (Tip of Arrow Away from Battery)*

NOTE: *Never apply a load for longer than 15 seconds. After each 15 seconds, turn the load control knob to OFF for at least one minute.*

4. Apply a 15 ampere load to the battery for 15 seconds. Wait at least three minutes before applying the load again.

5. Check and make a record of the temperature of the electrolyte.

6. Find the correct load for this test in Specifications in Section 4002.

NOTE: *The correct load is half of the cold cranking amperes at 0°F (-17°C).*

7. Turn the load control knob until the ammeter indicates the specified load. Keep the load for 15 seconds and read the voltmeter. Turn the load control knob to OFF.

8. Compare the test reading and the temperature of the electrolyte to the chart below.

Temperature of electrolyte	Minimum Voltage
70°F (21°C) and above	9.6
60°F (16°C)	9.5
50°F (10°C)	9.4
40°F (4°C)	9.3
30°F (-1°C)	9.1
20°F (-7°C)	8.9
10°F (-12°C)	8.7
0°F (-18°C)	8.5

   A. If the test result is equal to or more than the voltage shown, the battery is in good condition.

   B. If the test result is less than the voltage shown, discard the battery.

PREVIEW - YOUFIXTHIS.COM

Download full manual at youfixthis.com

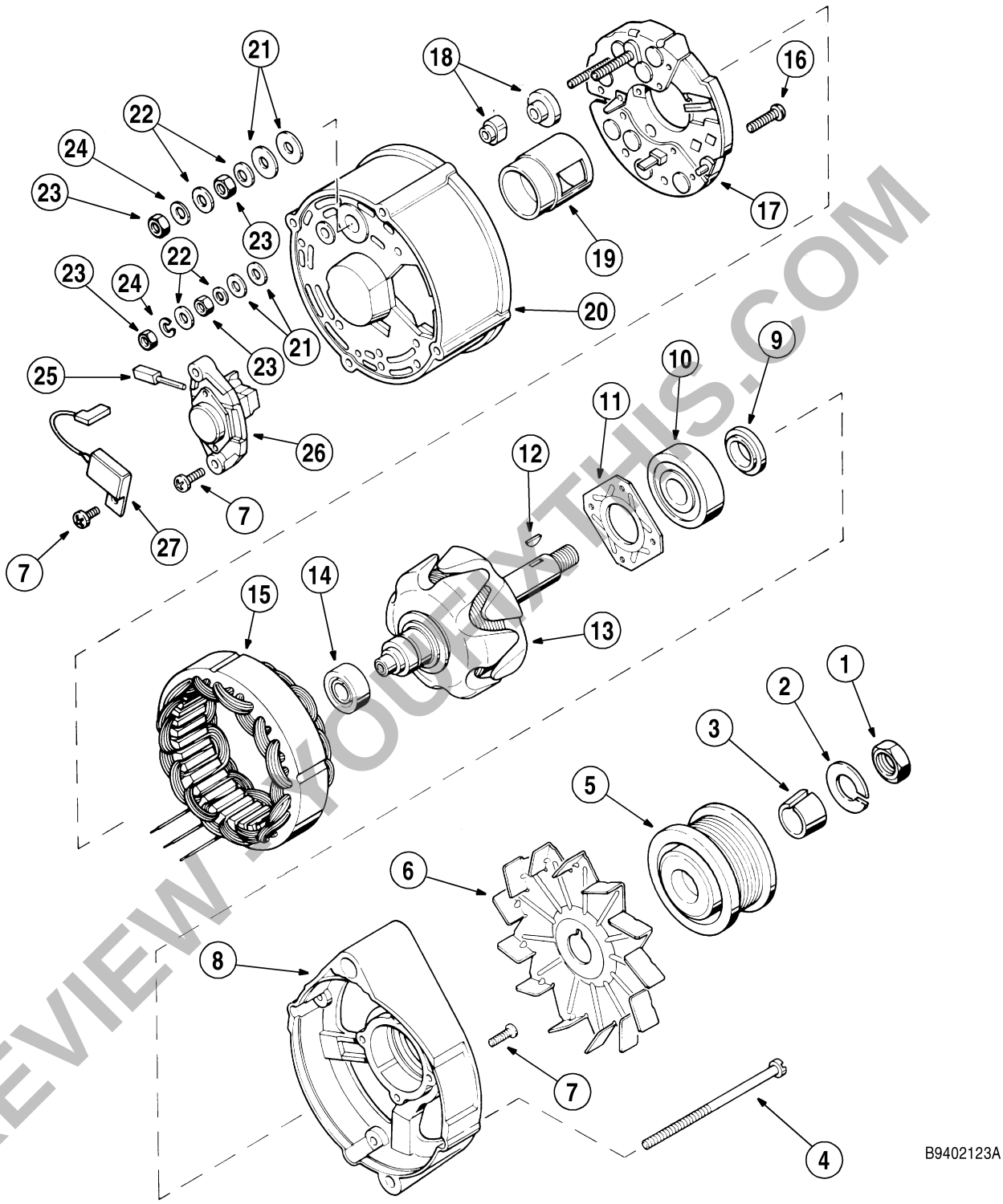

1. Nut
2. Lock Washer
3. Spacer
4. Screw
5. Pulley
6. Fan
7. Screw
8. Cover
9. Spacer
10. Front Bearing
11. Bearing Retainer
12. Key
13. Rotor
14. Rear Bearing
15. Stator
16. Screw
17. Rectifier Bridge
18. Insulator
19. Shield
20. Housing
21. Fiber Washer
22. Flat Washer
23. Nut
24. Lock Washer
25. Brush
26. Voltage Regulator and Brush Holder
27. Capacitor

Illustration of Alternator

PREVIEW YOUFIXTHIS.COM
Download full manual at youfixthis.com

STEP 30

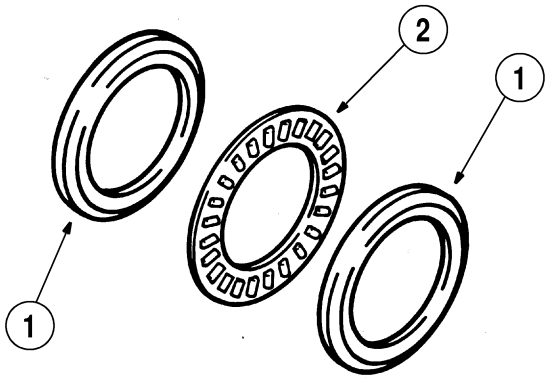

B1759A88J

Inspect the thrust washers (1) and the thrust bearing (2) for damage or wear. Use new parts as required.

STEP 31

Inspect the springs, the pins, and the balls of the anticavitation valve for damage or wear. Use new parts as required.

STEP 32

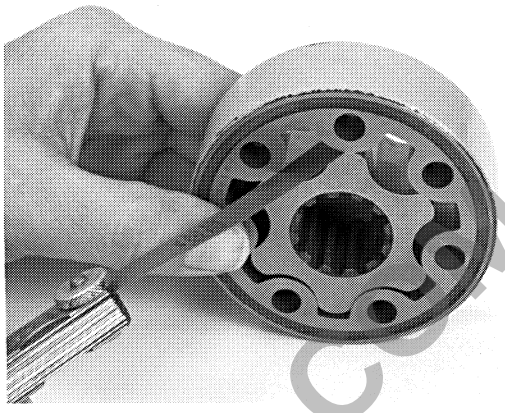

B8473288M

Use a feeler gauge to measure the clearance between the rotor and the stator. If the clearance is more than 0.13 mm (0.005 inch), a new metering gear set must be used.

STEP 33

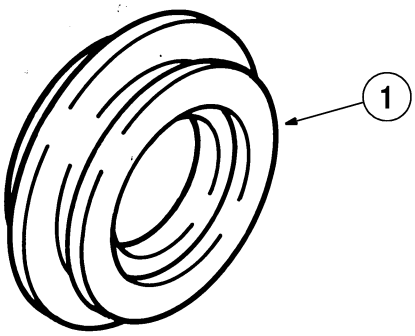

B1760A88J

Inspect the gland (1) for damage or wear. Use a new gland if required.

PREVIEW - YOUFIXTHIS.COM

Download full manual at youfixthis.com

STEP 121

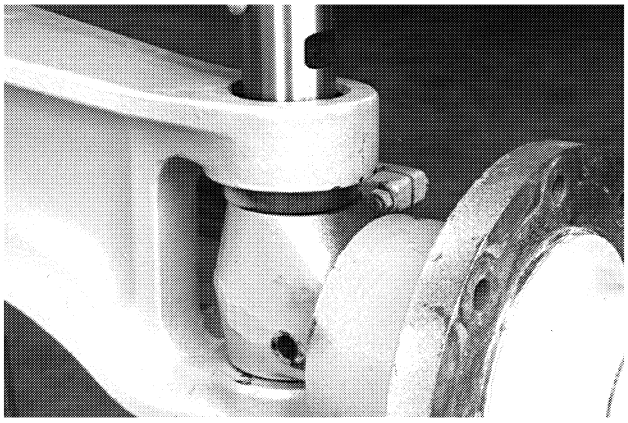

B633824M

Align the spindle, the thrust washer, and the thrust bearing with the steering axle. Start the kingpin into the spindle so that the notch for the lock pin is toward the outside.

STEP 122

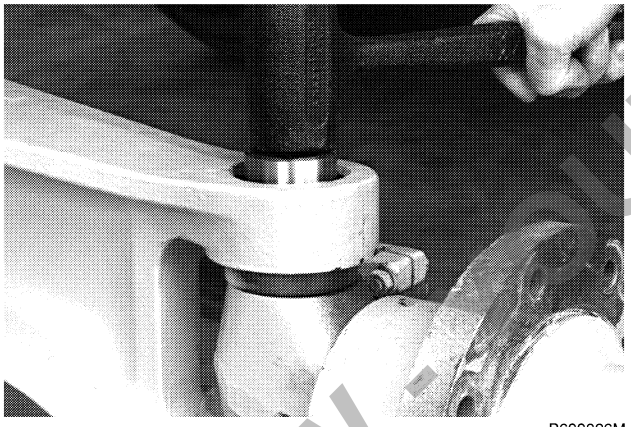

B633826M

Use a soft hammer to drive the kingpin into the spindle.

STEP 123

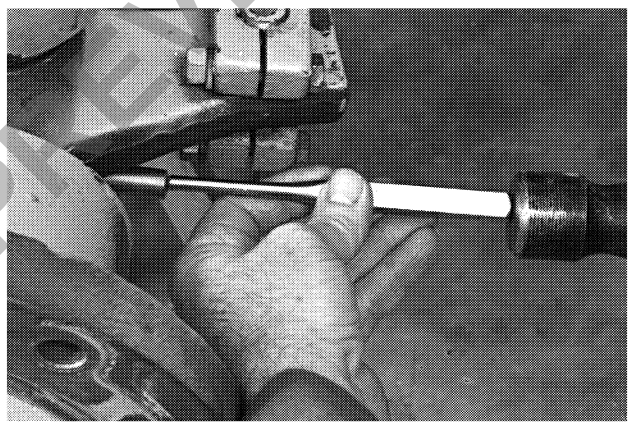

B633828M

Install the lock pin.

STEP 124

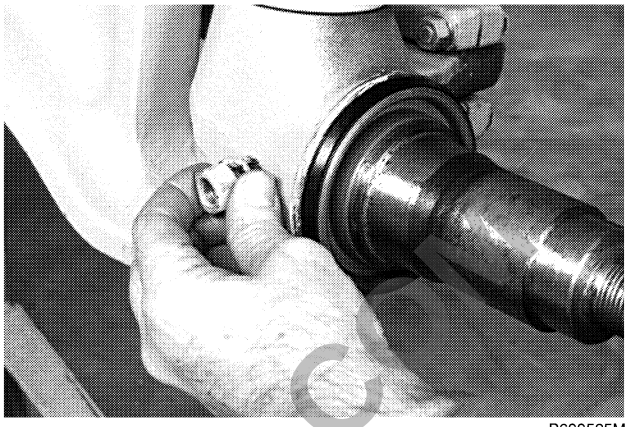

B633525M

Install the lock washer and the nut. Do not tighten the nut at this time.

STEP 125

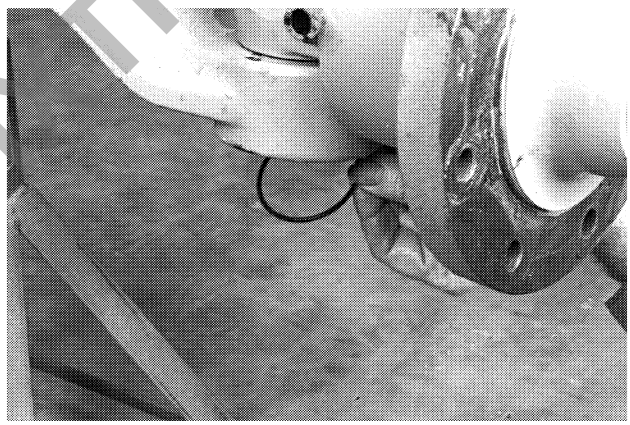

B633808M

Install a new O-ring in the bottom boss. Use grease to hold the O-ring.

STEP 126

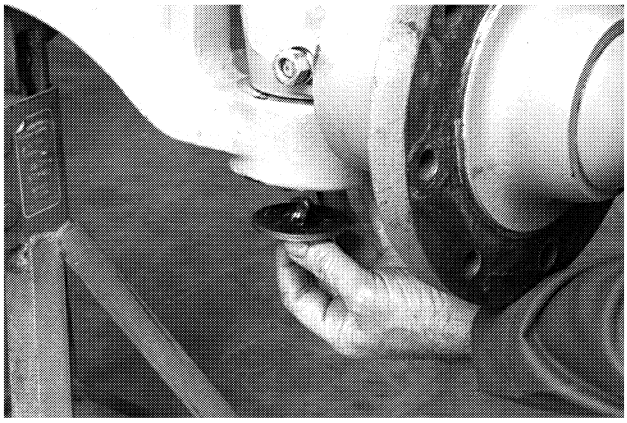

B633836M

Apply a small amount of grease to a spacer and install the spacer so that the grease fitting is toward the center of the machine.

PREVIEW - YOUFIXTHIS.COM
Download full manual at youfixthis.com

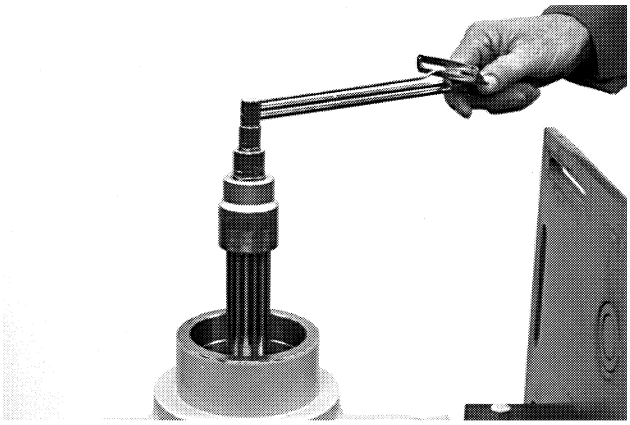

B9077129

The photo above shows a socket being used. Use the CAS-2375 bearing preload / backlash wrench and a pound-inch torque wrench to check the rotating torque of the pinion shaft. The rotating torque must be 1.7 to 2.2 Nm (15 to 20 pound-inches). If the rotating torque is less than specified, tighten the pinion nut a SMALL amount and check the rotating torque again. Also see IMPORTANT below step 173.

STEP 175



B9077135

When the rotating torque is as specified, use a hammer and punch and drive part of the pinion nut into the slot in the pinion shaft.

STEP 176

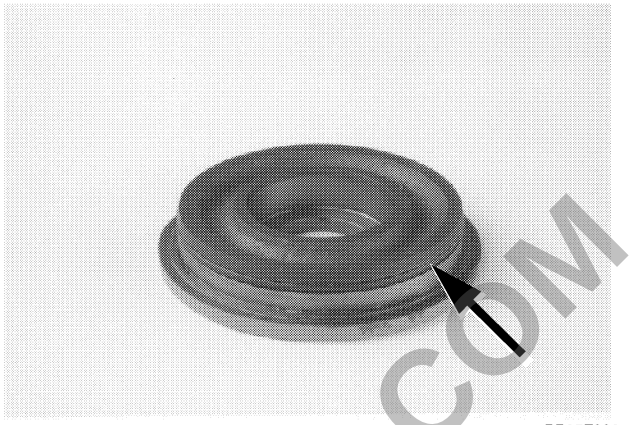

BP95F338

Install a new O-ring on the cover.

STEP 177

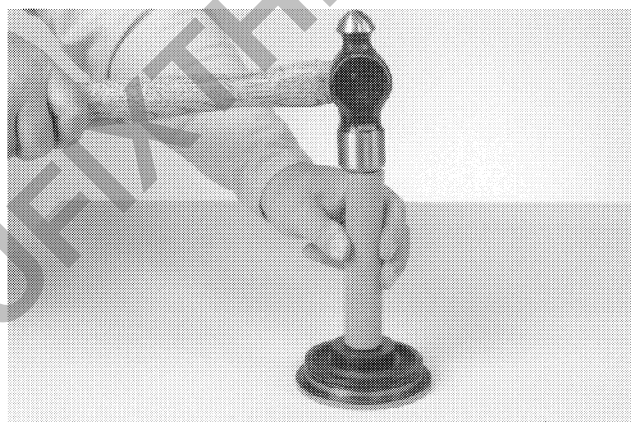

BP95F337

Use a suitable driver and drive a new seal into the cover.

STEP 178

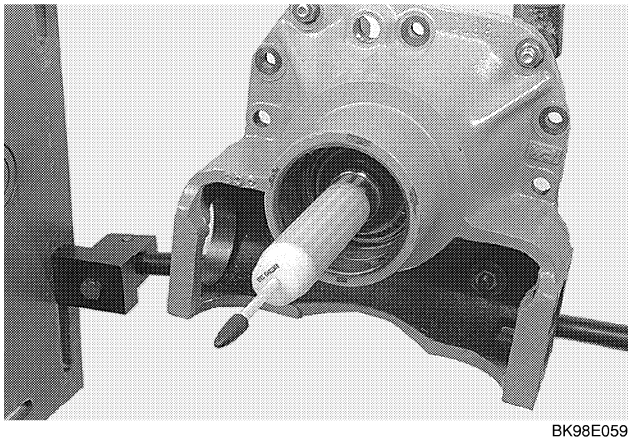

BK98E059

Put the CAS-2369 seal protector on the pinion shaft.

PREVIEW YOUFIXTHIS.COM

Download full manual at youfixthis.com

CHECKING SUPPLY PUMP FLOW

Equipment Required

CAS-1808 Flowmeter Fitting Kit

CAS-40033 Transmission Tool Kit

CAS-2011 Adapter with CAS-2383 Adapter Tube

OEM-1239 (CAS-10280) Flowmeter

Test Procedure

1. Make sure all equipment is clean.
2. Engage the parking brake.
3. Start the engine.
4. Oil at operating temperature.
5. Connect flowmeter and adapter to transmission filter base.
6. All transmission controls in neutral.
7. Engine running at 2200rpm (r/min).
8. Read the flow gauge and record flow.
9. See page 3 for specifications.

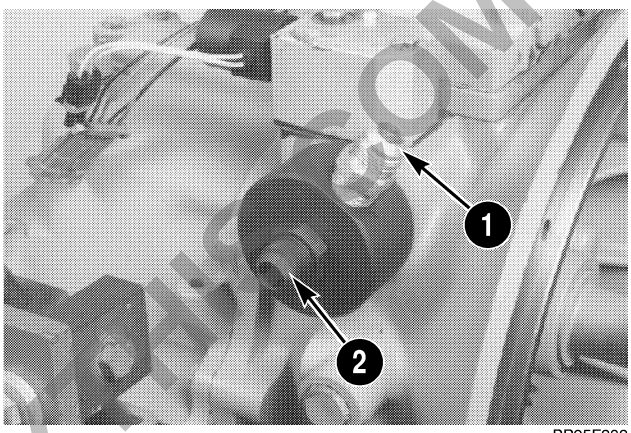

BP95F282

1. FLOWMETER ADAPTER
2. RETURN

PREVIEW - YOUFIXTHIS.COM

Download full manual at youfixthis.com

STEP 54



BK98J298

Use the hammer and punch, if necessary, to push the inner wheel bearing against the shoulder of the axle housing.

STEP 55

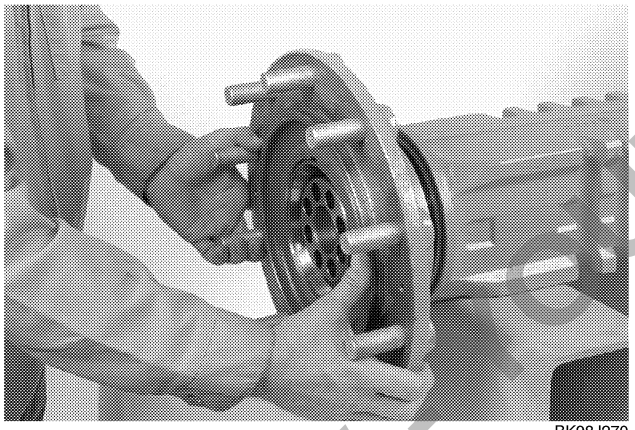

BK98J270

Use a solution of 50% water and 50% mineral spirits to wipe the rubber contact area on the hub seal. Use the same solution to wipe the corresponding contact area on the shoulder of the axle housing. DO NOT use oil on these contact areas. All oil must be removed from these contact areas in order for the hub seal to work correctly. When the contact areas are correctly prepared, install the wheel hub on the axle housing.

STEP 56

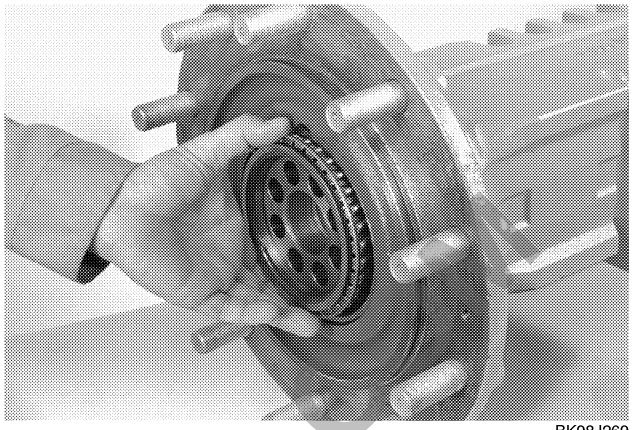

BK98J269

Use Case MS 1209 oil to lubricate the outer wheel bearing. Install the outer wheel bearing on the axle housing.

STEP 57

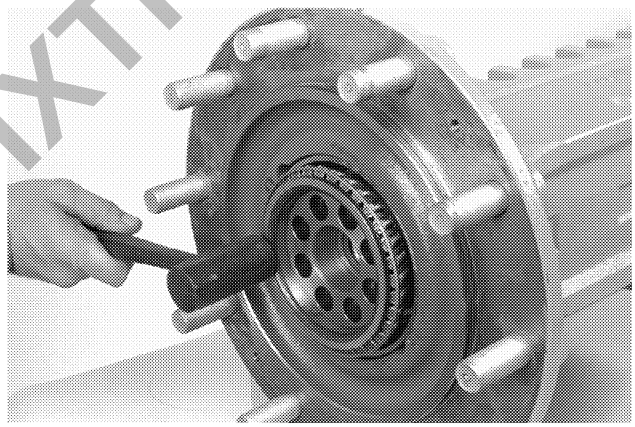

BK98J301

If necessary, use a hammer to tap the outer wheel bearing into position.

PREVIEW - YOUFIXTHIS.COM

Download full manual at youfixthis.com

STEP 259

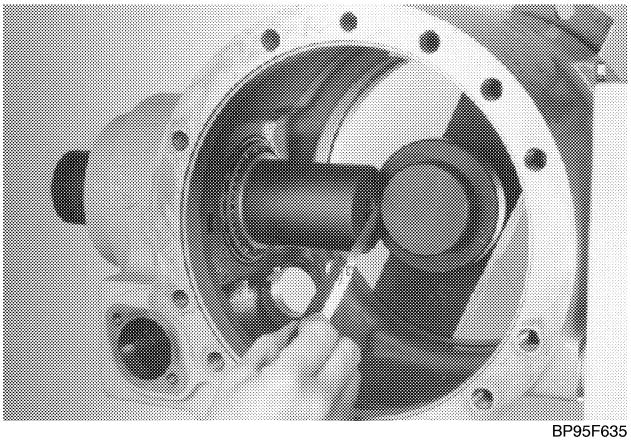

BP95F635

Use the feeler gauge and measure the space between the gauge block and the pinion depth gauge. Write the measurement on line “b” of the worksheet on the following page.

STEP 260

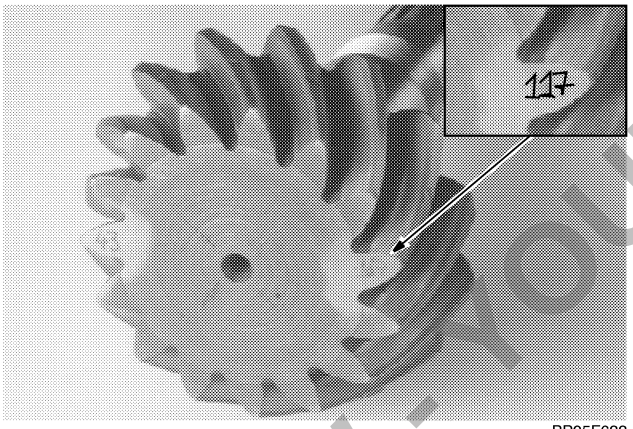

BP95F633

Find the number on the end of the pinion shaft. Write this number on line “d” of the worksheet on the following page.

STEP 261

See the example and worksheet on the following page. The number on line “a” does not change. Add line “a” and line “b” and write the answer on line “c”. Subtract line “d” from line “c” and write the answer on line “e”. Line “e” is the thickness of the shim to be installed on the pinion shaft.

STEP 262

Remove the special tools from the center section.

PREVIEW - YOUFIXTHIS.COM

Download full manual at youfixthis.com

AXLE ASSEMBLY (AXLE P/N 319063A1)

Brake Housing

NOTE: *Some of the photos in this section may appear different than the model you are repairing. The procedure is the same.*

STEP 104



BK00C499

Lubricate new O-rings with clean MS1209 oil and install the O-rings on the piston.

IMPORTANT: *Steps 105 through 106 are not normally required unless you are replacing the brake housings or doing procedures which will change the differential bearing preload, for example, replacing the differential housings, differential bearings, or ring and pinion gear sets.*

STEP 105

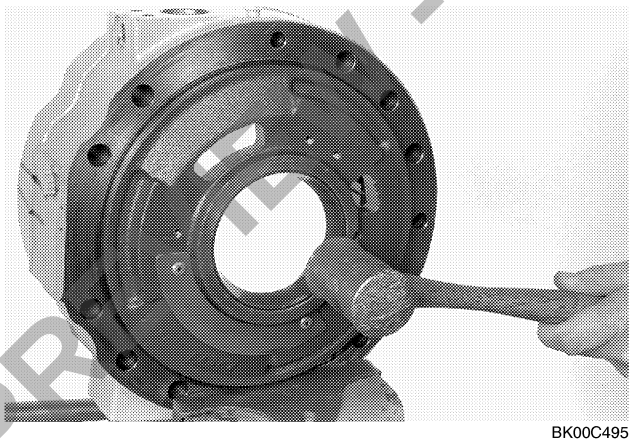

BK00C495

If the bearing cup was removed, use acceptable tools to install a new bearing cup.

STEP 106

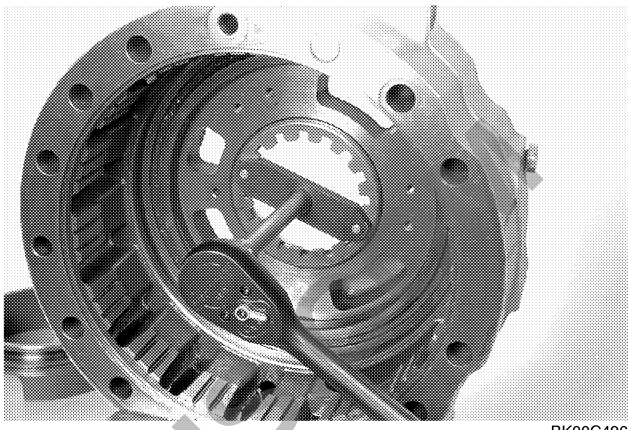

BK00C496

If the adjusting ring was removed, use the CAS2376 special tool to install a new adjusting ring. Do not tighten the adjusting ring at this time. Refer to the Differential Bearing Preload Adjustment portion of this section on page 129.

STEP 107

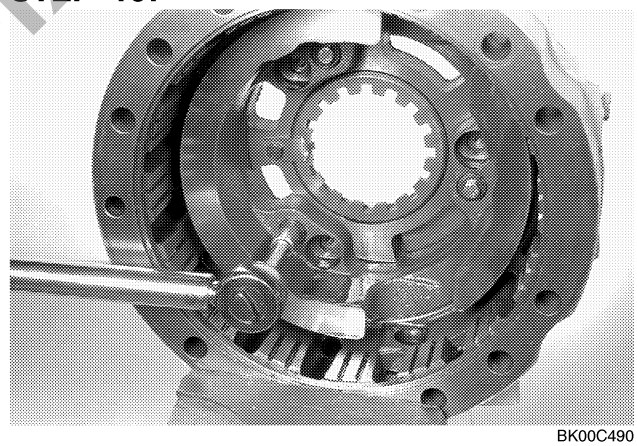

BK00C490

Lubricate the inside of the brake section with clean MS1209 oil and install the brake piston. Install the three cap screws, washers, and bushings into the piston. Tighten the cap screws to a torque of 10 Nm (89 pound-inches).

NOTE: *It may be necessary to use a rubber hammer to tap the piston into the brake section.*

PREVIEW - YOUFIXTHIS

Download full manual at youfixthis.com

STEP 54

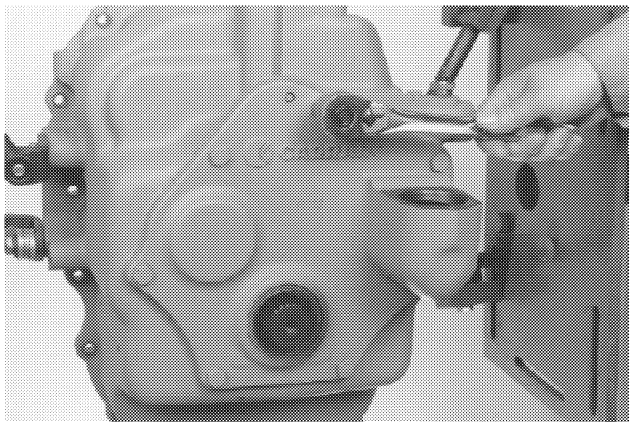

BP95F055

Remove the seven cap screws which fasten the rear cover to the rear housing.

STEP 55

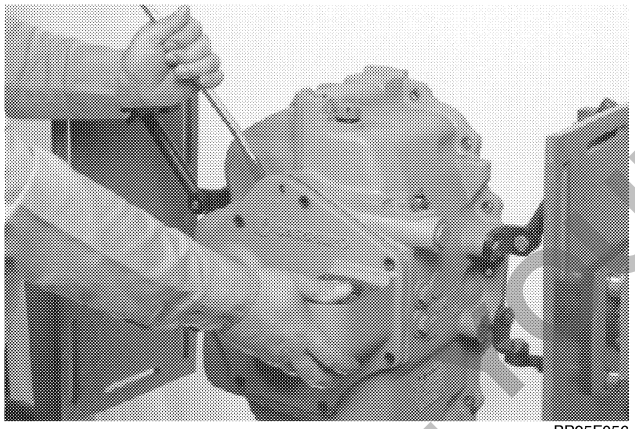

BP95F056

Use a prybar to loosen the rear cover from the rear housing. Remove the rear cover.

STEP 56



BP95F367

Remove the seal from the rear cover.

STEP 57

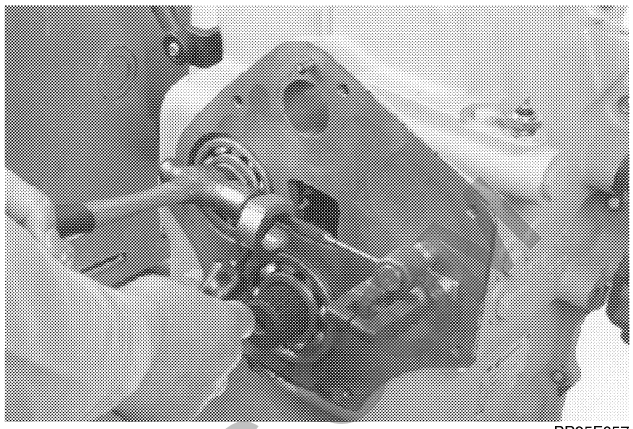

BP95F057

Use a punch to remove the pins which fasten the shift collars to the shift rods.

STEP 58

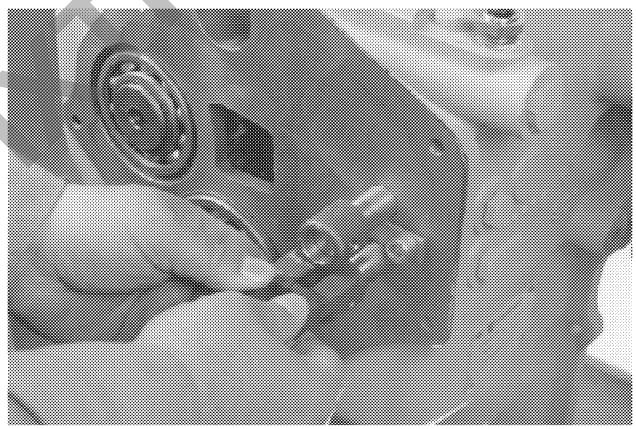

BP95F058

Remove the shift collars from the shift rods.

STEP 59

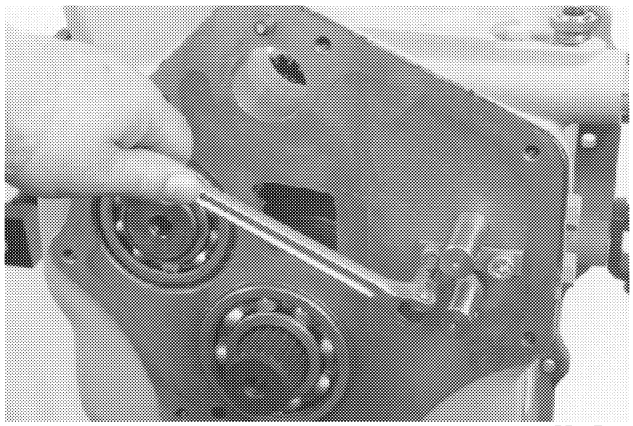

BP95F059

Remove the two Allen head screws which hold the plate between the two shift rods.

PREVIEW - YOUFIXTHIS.

Download full manual at youfixthis.com

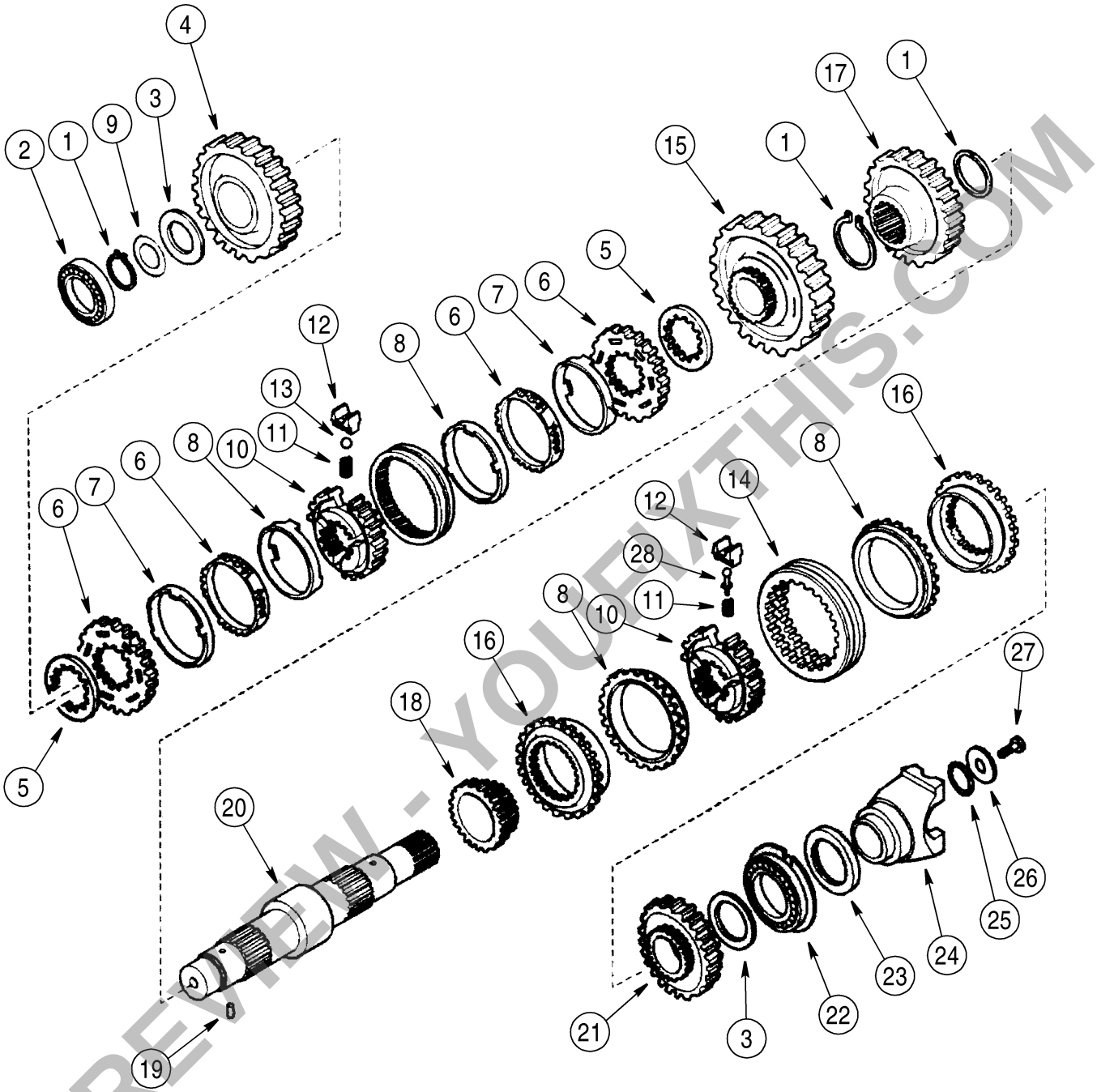

BS00E042

1. SNAP RING
2. BEARING
3. THRUST WASHER
4. SECOND GEAR
5. SPACER
6. SYNCHRONIZER RING
7. STEEL RING
8. FRICTION RING
9. SHIM
10. HUB
11. HUB SPRING
12. SPRING PLATE
13. BALL
14. SLEEVE
15. FIRST GEAR
16. CLUTCH RING
17. FOUR WHEEL DRIVE GEAR
18. FOURTH GEAR
19. PIN
20. SECONDARY SHAFT
21. THIRD GEAR
22. BEARING AND SNAP RING
23. SEAL
24. OUTPUT FLANGE
25. O-RING
26. WASHER
27. CAP SCREW
28. HUB PIN

PREVIEW - YOUFIXTHIS.COM

Download full manual at youfixthis.com

STEP 414

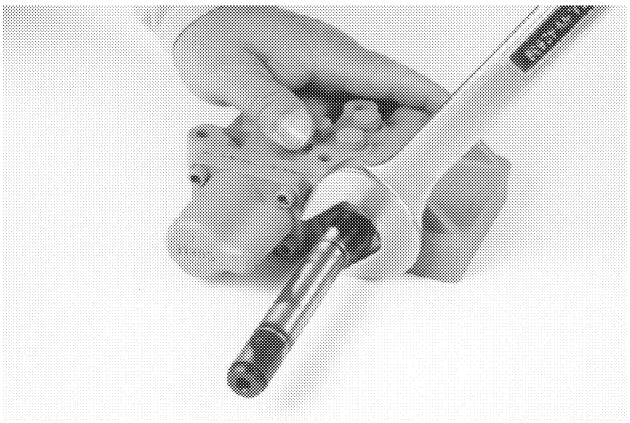

BP95F297

Loosen the solenoid plunger.

STEP 415

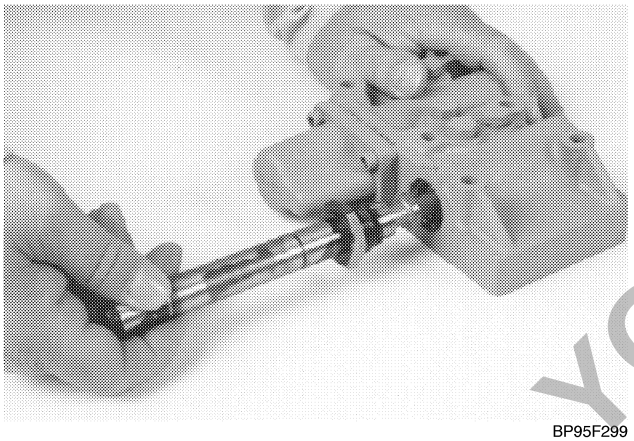

BP95F299

Remove the solenoid plunger with the forward/reverse spool attached.

STEP 416

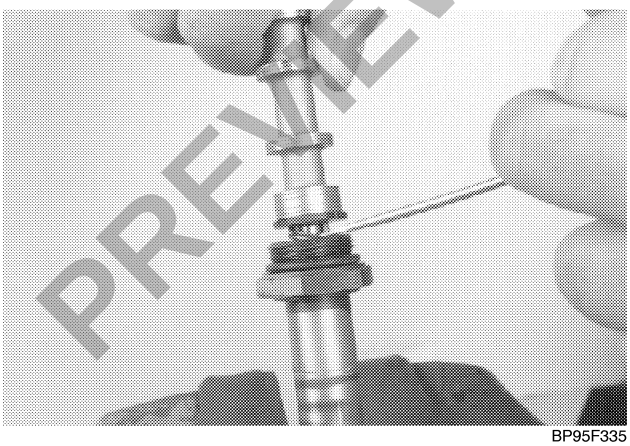

BP95F335

Use a small screwdriver to push down the spring as shown so that you can disengage the notched end of the forward/reverse spool from the post on the end of the solenoid plunger.

STEP 417

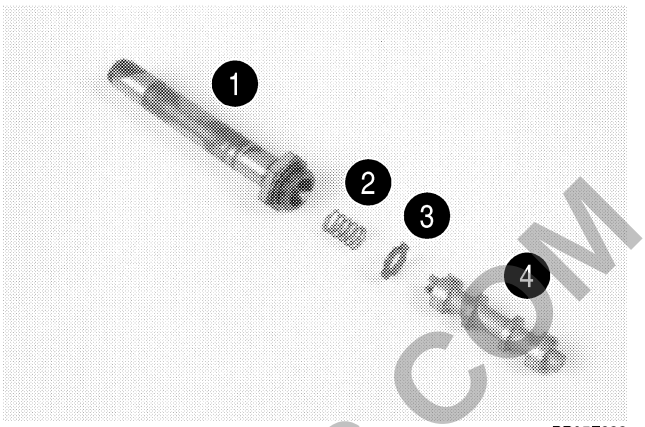

BP95F333

Separate the solenoid plunger (1), the spring (2), the spring spacer (3), and the forward/reverse spool (4).

STEP 418

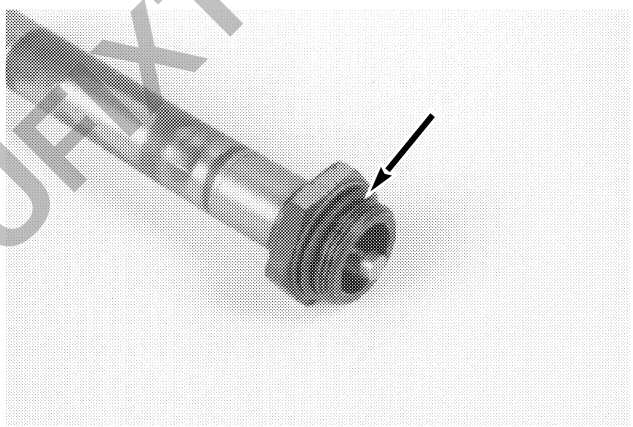

BP95F334

Remove the O-ring from the solenoid plunger.

IMPORTANT: *Refer to Service Bulletin (NLB SB 020 99) when servicing the portion of the transmission control valve that contains the modulator pistons, the flow divider shaft, and the flow divider piston. The snap ring located near the center of the valve body between the flow divider shaft and the inner modulator piston, may be subject to breakage. If the snap ring breaks, it will result in pressures that are not adequate for proper transmission operation. Service kits are available to replace the affected parts. Kit P/N 368438A1 contains all the necessary parts plus a guide tool to install the new snap ring. The guide tool* ***is required*** *to properly install the new snap ring or damage to the valve may result. The following procedure shows removing the old snap ring.*

PREVIEW - YOUFIXTHIS.COM
Download full manual at youfixthis.com

PREVIEW - YOUFIXTHIS.COM

Download full manual at youfixthis.com

CLEANING THE HYDRAULIC SYSTEM

1. Prepare the portable filter on page 3 by doing the following steps:
    a. Remove all the hydraulic oil from the inlet and outlet hoses for the portable filter.
    b. Remove the filter element from the portable filter.
    c. Remove all hydraulic oil from the portable filter.
    d. Clean the inside of the housing for the filter element.
2. You must know whether the contamination is microscopic or visible. See Types of Contamination on page 4.
3. If the contamination is microscopic:
    a. Check the maintenance schedule for the machine to learn if the hydraulic oil must be changed. If needed, change the hydraulic oil. See Section 1002 for specifications. Change the hydraulic filter.
    b. Do steps 6 through 38.
4. If the contamination is visible:
    a. Change the hydraulic oil and hydraulic filter. See Section 1002 for oil specifications.
    b. Do steps 5 through 38.
5. Check the amount of contamination in the hydraulic system by doing the following steps:
    a. Disassemble one cylinder in two different circuits. Check for damage to seals, scoring of the cylinder wall, etc. Repair the cylinders as necessary.
    b. If, in your judgment, the damage to the cylinders was caused by severe contamination and is not the result of normal wear, it is necessary to remove, clean and repair valves, pump, lines, cylinders, hydraulic reservoir, etc. in the hydraulic system.
6. Connect a vacuum pump to the hydraulic reservoir air breather hose. Start the vacuum pump.
7. Loosen and remove the drain plug from the reservoir.
8. See the fitting kit shown on page 3. Install the valve in the hole for the drain plug. Make sure that the valve is closed.
9. Stop the vacuum pump.
10. Connect the inlet hose for the portable filter to the valve that is installed in the hole for the drain plug.
11. Disconnect the vacuum pump from the filler cap opening on the hydraulic reservoir.
12. Install the outlet hose for the portable filter in the hydraulic reservoir.
13. Open the valve that is installed in the hole for the drain plug.
14. Move the switch for the portable filter to the ON position. Start and run the engine at 1500 rpm (r/min).
15. Run the portable filter for 10 minutes.
16. Continue to run the portable filter. Increase the engine speed to full throttle. Heat the oil to operating temperature by doing the following steps:
    a. Hold the bucket control lever in the ROLLBACK position for 15 seconds.
    b. Return the bucket control lever to NEUTRAL for 30 seconds.
    c. Repeat steps 17a through 18b until the oil in the hydraulic system is at operating temperature.
17. Continue to run the engine at full throttle. Continue to run the portable filter.
18. Operate each hydraulic circuit to completely extend and retract the cylinders. Continue to operate each hydraulic circuit two times, one after the other, for 45 minutes.
19. Decrease the engine speed to low idle.
20. Continue to run the portable filter for 10 minutes.
21. Stop the portable filter.
22. Stop the engine.
23. Remove the hose from the hydraulic reservoir.

PREVIEW - YOUFIXTHIS.COM

Download full manual at youfixthis.com

TYPICAL CYLINDERS

Disassembly

Clean the outside of the cylinder. If the hoses were removed with the cylinder, remove the hoses from the cylinder.

1. Fasten the tube (1) in a vise or other holding equipment. Be careful to prevent damage to the tube (1).
2. Use the spanner wrench to turn the gland (2) out of the tube (1).
3. Pull the piston rod (5) straight out of the tube (1) to prevent damage to the tube (1).
4. Remove the gland (2) from the piston rod (5).
5. Remove the wear ring (4) from the piston(3).
6. Remove the O-ring (6), backup ring (7), wiper (8), u-cup (10), and buffer seal (9) from the gland (2).

Inspection

1. Clean the piston (3), gland (2), piston rod (5), and tube (1) in cleaning solvent.
2. Discard the parts that were removed from the piston (3) and the gland (2).
3. Illuminate the inside of the tube (1). Inspect the inside of the tube (1) for deep grooves and other damage. If there is damage to the tube (1), a new tube (1) must be used.
4. Check to be sure that the piston rod (5) is straight, If the piston rod (5) is not straight, install a new piston rod (5).
5. Remove small scratches on the inside of the tube (1) with emery cloth of medium grit, Use the emery cloth with a rotary motion.
6. Inspect the gland (2) for rust and clean and remove rust as required.
7. Inspect the gland end of the tube (1) for sharp edges that will cut the gland O-ring (6), remove as required.

Assembly

NOTE: *If a new gland (2) is being installed, put the part number of the cylinder on the new gland (2).*

1. Install the buffer seal (9) in the gland (2). The side of the buffer seal (9) with the lip must be toward the small end of the gland (2).
2. Install a new u-cup (10) in the gland. The lips of the u-cup must be toward the small end of the gland (2).
3. Install a new wiper (8) in the gland (2), The lips of the wiper (8) must be toward the large end of the gland (2).
4. Install a new backup ring (7) in the groove on the outside of the gland (2). If both sides of the backup ring (7) are not flat, the side that is not flat must be toward the small end of the gland (2).
5. Install the O-ring (6) next to the backup ring (7) in the groove on the outside of the gland (2). The O-ring (6) must be toward the small end of the gland (2).
6. Remove any marks and sharp edges on the chamfer at the end of the piston rod (5).
7. Lubricate the bore of the gland (2) with clean oil.
8. Push the gland (2) onto the piston rod (5). Be careful not to damage the seals.
9. Fasten the piston rod (5) in a vise. Be careful to prevent damage to the piston rod (5).
10. Install a new wear ring (4) in the end groove on the outside of the piston (3).
11. Lubricate the inside of the tube (1) and the piston (3) with clean oil.
12. Push the tube (1) straight onto the piston (3).
13. Start the tube (1) onto the piston rod assembly. Be careful not to damage the wear ring and seal.
14. Lubricate the O-ring (6) on the gland (2) with clean oil.
15. When the piston (3) is in the smooth part of the tube (1), start the gland (2) into the tube (1)
16. Use a spanner wrench to turn the gland (2) into the tube (1). Tighten the gland (2).
17. If the hoses were removed with the cylinder, install new O-rings, if equipped, on the hose fittings. Lubricate the O-rings with clean oil. Install the hoses.

PREVIEW - YOUFIXTHIS.COM

Download full manual at youfixthis.com

PREVIEW ONLY

You're viewing 25 of 786 pages

The full manual includes:

- All 786 pages, complete
- Searchable PDF (find any keyword)
- No watermarks
- Instant download
- Print-ready quality

GET FULL MANUAL NOW

Case 585G, 586G, 588G, 585G Forklift, 586G Forklift, 588G Forklift Service Manual

Scan or click anywhere
youfixthis.com

Click anywhere on this page to get the full manual