TORQUE SPECIFICATIONS - DECIMAL HARDWARE

Use the torques in this chart when special torques are not given. These torques apply to fasteners with both UNC and UNF threads as received from suppliers dry, or when lubricated with engine oil. Not applicable if special graphities, Molydisulfide greases, or other extreme pressure lubricants are used.

Grade 5 Bolts, Nuts, and Studs



Size	Pound-Inches	Newton metres
1/4 inch	108 to 132	12 to 15
5/16 inch	204 to 252	23 to 28
3/8 inch	420 to 504	48 to 57
Size	Pound-Feet	Newton metres
7/16 inch	54 to 64	73 to 87
1/2 inch	80 to 96	109 to 130
9/16 inch	110 to 132	149 to 179
5/8 inch	150 to 180	203 to 244
3/4 inch	270 to 324	366 to 439
7/8 inch	400 to 480	542 to 651
1.0 inch	580 to 696	787 to 944
1-1/8 inch	800 to 880	1085 to 1193
1-1/4 inch	1120 to 1240	1519 to 1681
1-3/8 inch	1460 to 1680	1980 to 2278
1-1/2 inch	1940 to 2200	2631 to 2983

Grade 8 Bolts, Nuts, and Studs



Size	Pound-Inches	Newton metres
1/4 inch	144 to 180	16 to 20
5/16 inch	288 to 348	33 to 39
3/8 inch	540 to 648	61 to 73
Size	Pound-Feet	Newton metres
7/16 inch	70 to 84	95 to 114
1/2 inch	110 to 132	149 to 179
9/16 inch	160 to 192	217 to 260
5/8 inch	220 to 264	298 to 358
3/4 inch	380 to 456	515 to 618
7/8 inch	600 to 720	814 to 976
1.0 inch	900 to 1080	1220 to 1465
1-1/8 inch	1280 to 1440	1736 to 1953
1-1/4 inch	1820 to 2000	2468 to 2712
1-3/8 inch	2380 to 2720	3227 to 3688
1-1/2 inch	3160 to 3560	4285 to 4827

NOTE: *Use thick nuts with Grade 8 bolts.*

PREVIEW - YOUFIXTHIS.COM

Download full manual at youfixthis.com

RADIATOR

Removal

Put identification tags on all disconnected hoses and wires. Close disconnected hoses and fittings with caps and plugs.

STEP 1
Park the machine on a level surface.

STEP 2
Lower the forks to the ground.

STEP 3
Stop the engine and apply the parking brake.

STEP 4
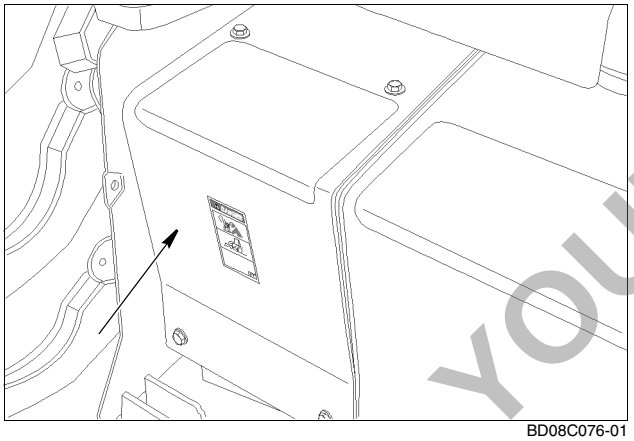
BD08C076-01

Remove the access cover from the battery compartment.

STEP 5
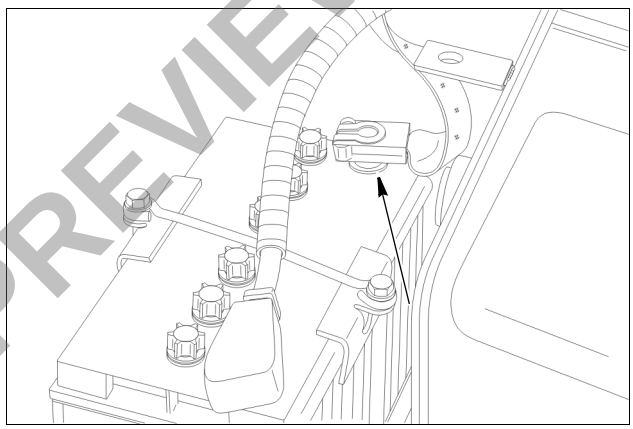
BD08C077-01

Disconnect the ground cable from the negative battery post.

STEP 6


BD08C176-01

Remove the grille to gain access to the radiator drain.

STEP 7
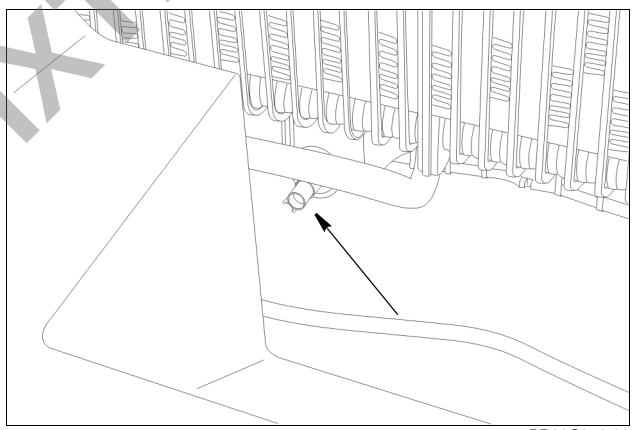
BD08C056-01

Use a suitable container to drain the cooling system. Open the drain valve on the radiator.

STEP 8
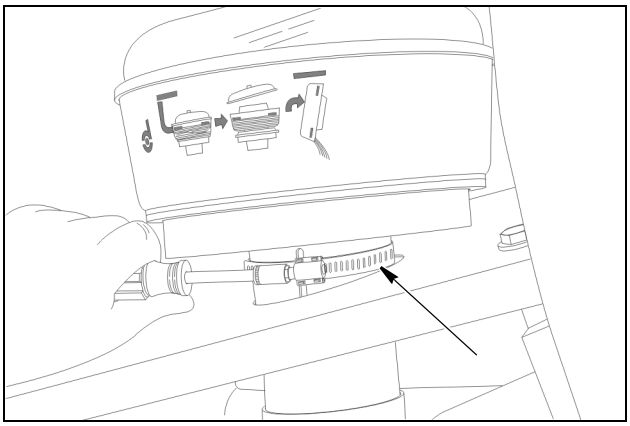
BD08C064-01

Loosen the clamp that fastens the precleaner assembly to the air cleaner.

PREVIEW - YOUFIXTHIS.COM
Download full manual at youfixthis.com

CHECK SHEET - 6 K FORKLIFT

1. _____ (2305 to 2320 specified) rpm (r/min) hydraulic stall speed

2. _____ (2240 to 2250 specified) rpm (r/min) torque converter stall speed

3. _____ (x to x specified) rpm (r/min) hydraulic and torque converter stall speed

rpm (r/min)	
1. 2305 to 2320 2. 2240 to 2250 3. x to x	Torque converter, transmission, hydraulic system and engine are probably good.
1. Above 2320 2. Above 2250 3. Above x	Engine problem. Check engine speeds. See specifications in Section 9001. Check the timing of the fuel injection pump according to the instructions in section 3416.
1. Below 2305 2. Below 2240 3. Below x	Engine problem. Check engine speeds according to instructions in Section 9001. Check the timing of the fuel injection pump according to the instructions in Section 3416. Replace the fuel and air filters.
1. Below 2305 2. 2240 to 2250 3. Below x	Hydraulic system problem(s). See section 8002. Check the setting of the main relief valve. Check the output of the hydraulic pump.
1. Above 2320 2. 2240 to 2250 3. Above x	Hydraulic system problem(s). See section 8002. Check the setting of the main relief valve. Check the output of the hydraulic pump. Check for leakage in the loader control valve.
1. 2305 to 2320 2. Above 2250 3. Above x	Torque converter or transmission problems. See Section 6002 and check the transmission and torque converter.
1. 2305 to 2320 2. Below 2240 3. Below x	Torque converter or transmission problems. See Section 6002 and check the transmission and torque converter.

PREVIEW - YOUFIXTHIS.COM

Download full manual at youfixthis.com

ILLUSTRATIONS

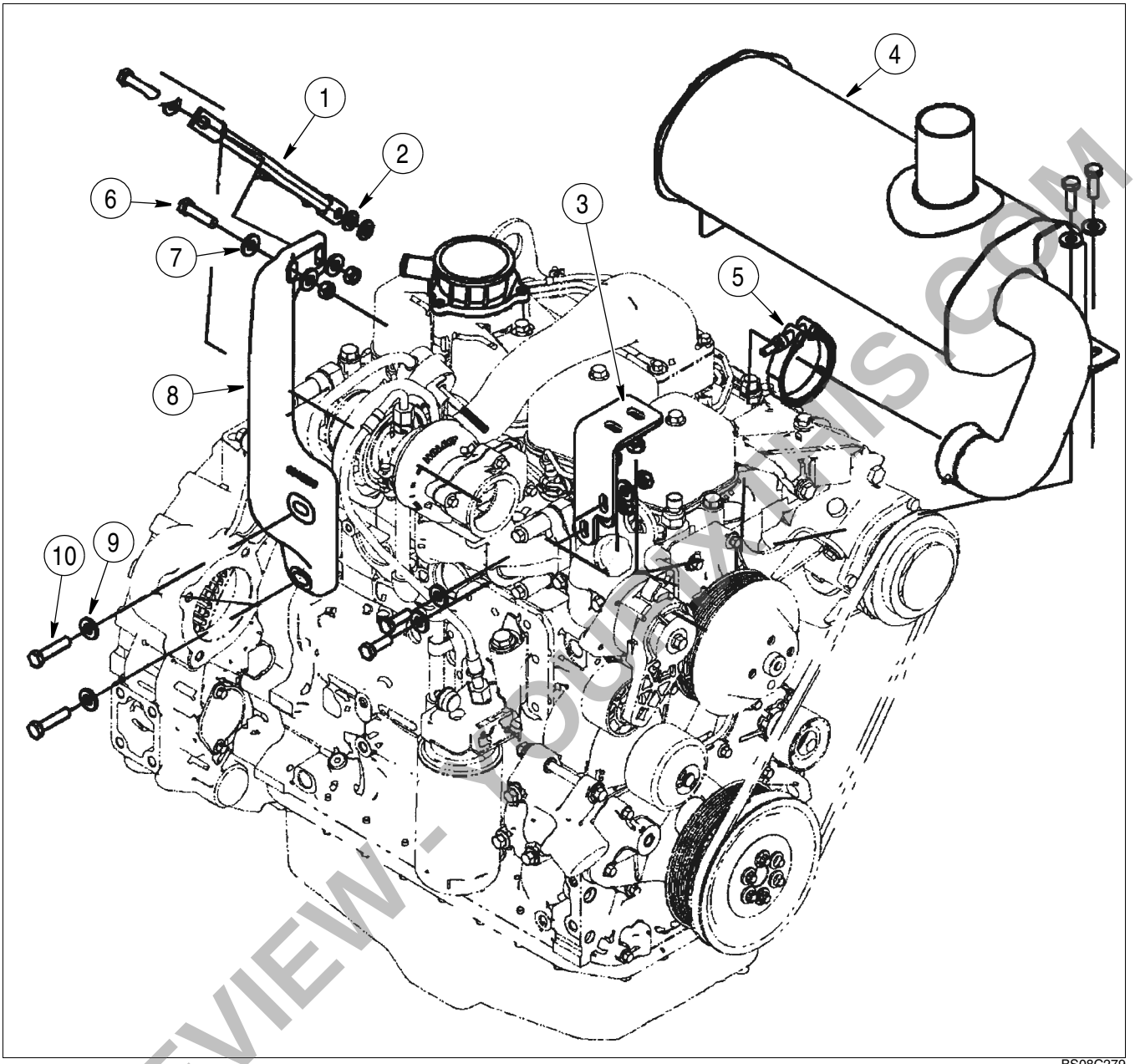

BS08C279

1. BRACE, FRONT
2. WASHER
3. BRACKET, REAR
4. MUFFLER
5. CLAMP, T-BOLT
6. BOLT
7. WASHER
8. BRACKET, FRONT
9. WASHER
10. BOLT

MUFFLER

PREVIEW - YOUFIXTHIS.COM

Download full manual at youfixthis.com

Hazard Switch

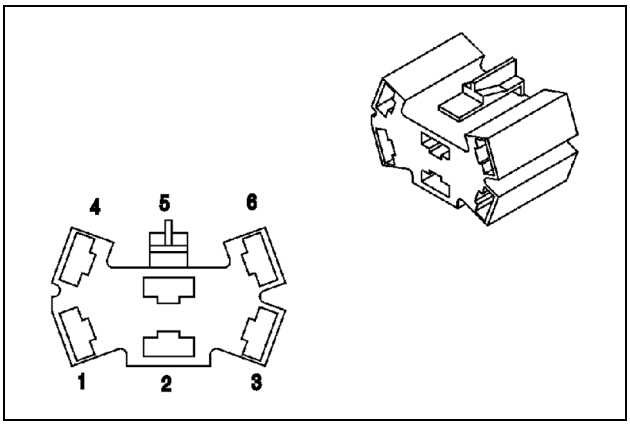

245781C1

CAV	WIRE IDENT	CIRCUIT
1	46	Large main connector G3
2	19B	Splice 19B
3	Not used	
4	Not used	
5	Not used	
6	30	Driving light switch connector 6

Differential Lock Engage Switch

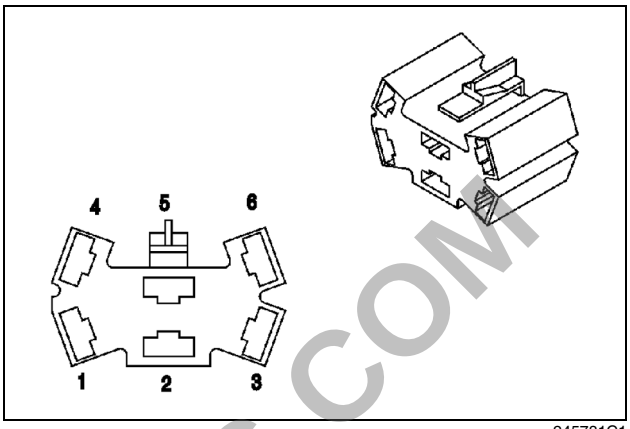

245781C1

CAV	WIRE IDENT	CIRCUIT
1	Not used	
2	19B	Splice 19B
3	25S	Large main connector E2
4	Not used	
5	Not used	
6	Not used	

Turn Signal Switch

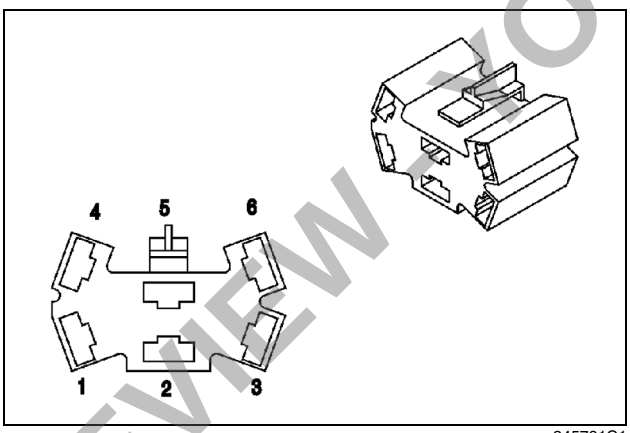

245781C1

CAV	WIRE IDENT	CIRCUIT
1	45R	Large main connector G2
2	19B	Hazard switch connector 2
3	45L	Large main connector G1
4	47R	Large main connector H1
5	30	Hazard switch connector 6
6	47L	Large main connector G4

De-clutch Override Switch

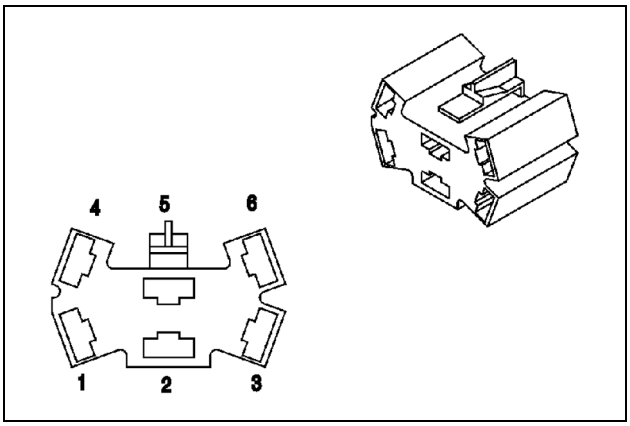

245781C1

CAV	WIRE IDENT	CIRCUIT
1	25D	Large main connector D4
2	19B	Differential lock switch connector 2
3	Not used	
4	Not used	
5	Not used	
6	Not used	

PREVIEW - YOUFIXTHIS.COM

Download full manual at youfixthis.com

Ignition Switch

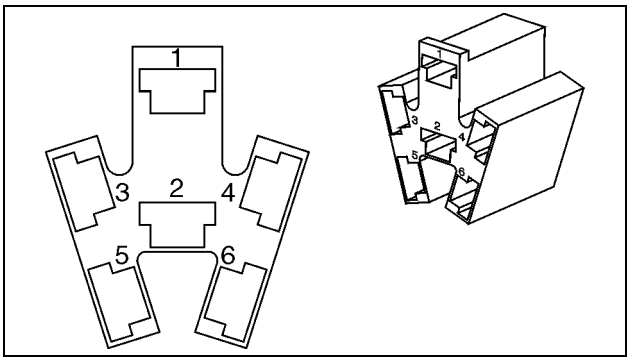

225253C1

CAV	WIRE IDENT	CIRCUIT
1	1D	Large main connector A1
2	21A	Large main connector B4
3	3	Large main connector A2
4	4	Large main connector B1
5	Not used	
6	Not used	

Rear Work Light Switch

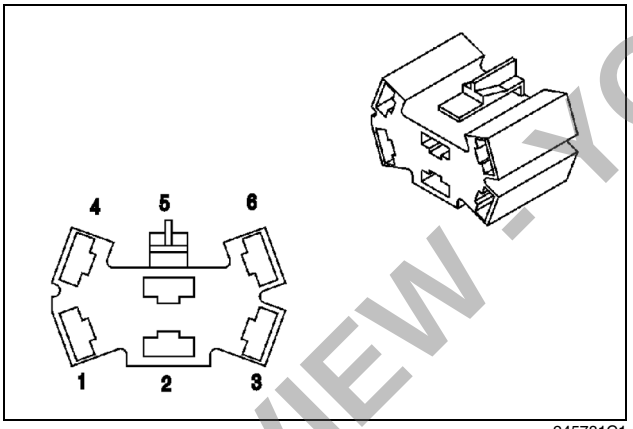

245781C1

CAV	WIRE IDENT	CIRCUIT
1	42C	Large main connector F2
2	19C	Large main connector B2
3	Not used	
4	Not used	
5	Not used	
6	30	Splice 30

Driving Light Switch

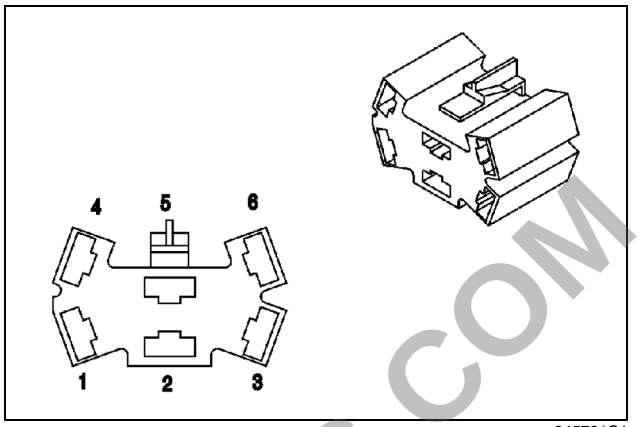

245781C1

CAV	WIRE IDENT	CIRCUIT
1	41	Large main connector J3
2	19A	Large main connector J2
3	Not used	
4	Not used	
5	Not used	
6	30	Rear working light switch connector 6

Horn Switch

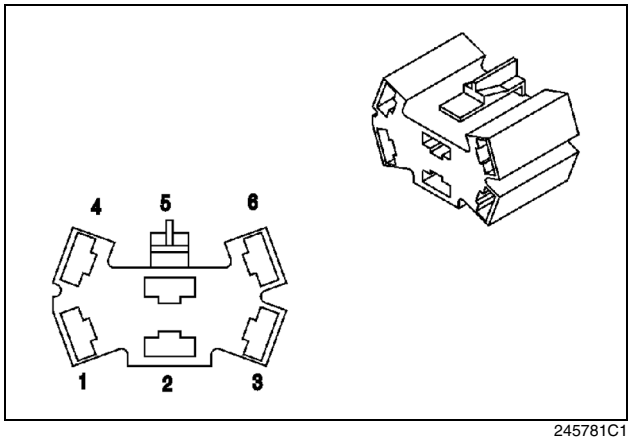

245781C1

CAV	WIRE IDENT	CIRCUIT
1	Not used	
2	64A	Large main connector H2
3	64B	Large main connector J1
4	Not used	
5	Not used	
6	Not used	

PREVIEW - YOUFIXTHIS.COM

Download full manual at youfixthis.com

TORQUE SPECIFICATIONS - METRIC HARDWARE

Use the following torques when specifications are not given.

These values apply to fasteners with coarse threads as received from supplier, plated or unplated, or when lubricated with engine oil. These values do not apply if graphite or Molydisulfide grease or oil is used.

Grade 8.8 Bolts, Nuts, and Studs



Size	Pound-Inches	Newton metres
M4	24 to 36	3 to 4
M5	60 to 72	7 to 8
M6	96 to 108	11 to 12
M8	228 to 276	26 to 31
M10	456 to 540	52 to 61
Size	Pound-Feet	Newton metres
M12	66 to 79	90 to 107
M14	106 to 127	144 to 172
M16	160 to 200	217 to 271
M20	320 to 380	434 to 515
M24	500 to 600	675 to 815
M30	920 to 1100	1250 to 1500
M36	1600 to 1950	2175 to 2600

Grade 10.9 Bolts, Nuts, and Studs



Size	Pound-Inches	Newton metres
M4	36 to 48	4 to 5
M5	84 to 96	9 to 11
M6	132 to 156	15 to 18
M8	324 to 384	37 to 43
Size	Pound-Feet	Newton metres
M10	54 to 64	73 to 87
M12	93 to 112	125 to 150
M14	149 to 179	200 to 245
M16	230 to 280	310 to 380
M20	450 to 540	610 to 730
M24	780 to 940	1050 to 1275
M30	1470 to 1770	2000 to 2400
M36	2580 to 3090	3500 to 4200

Grade 12.9 Bolts, Nuts, and Studs

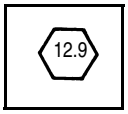

Usually the torque values specified for grade 10.9 fasteners can be used satisfactorily on grade 12.9 fasteners.

PREVIEW - YOUFIXTHIS.COM

Download full manual at youfixthis.com

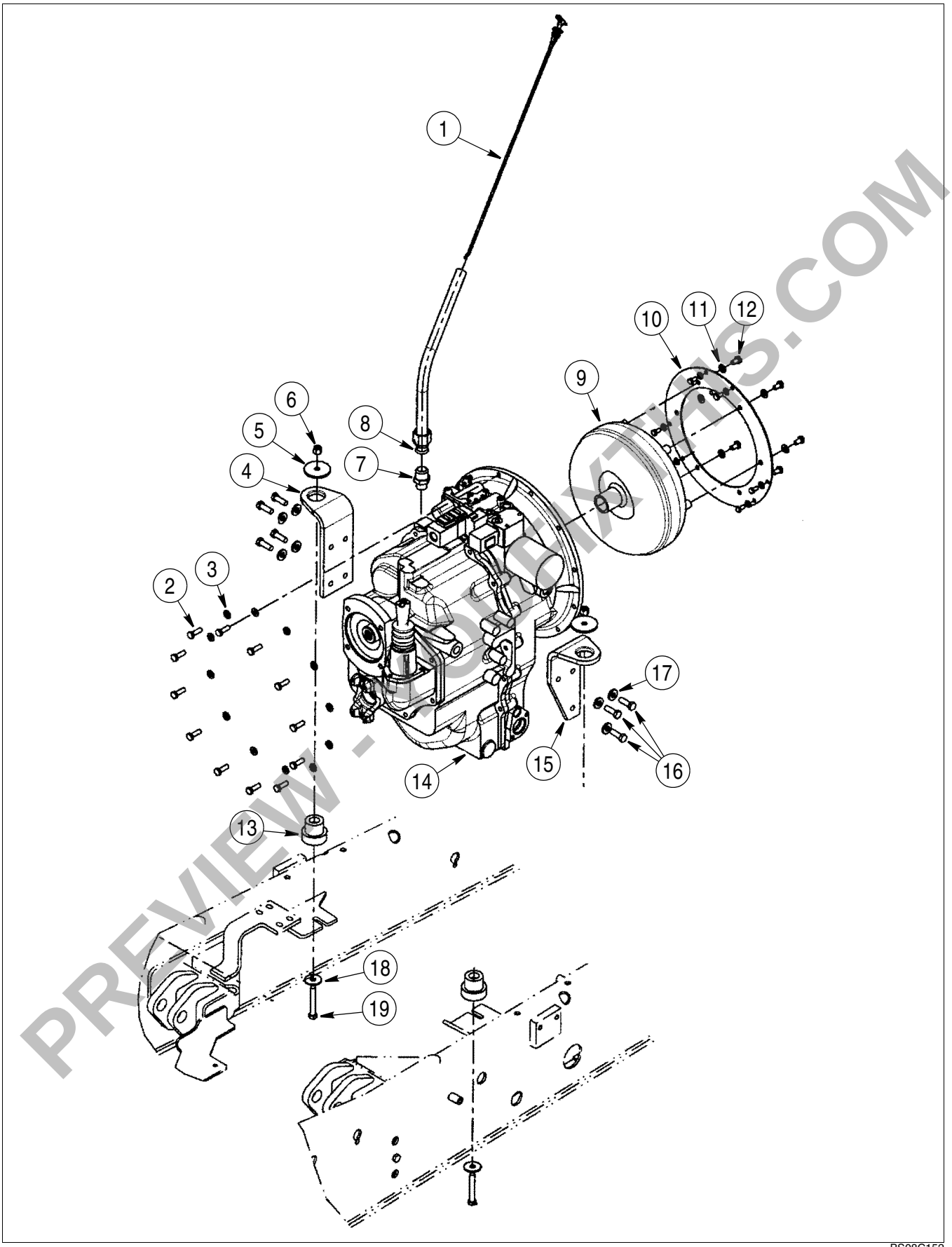

BS08C152

TRANSMISSION

PREVIEW - YOUFIXTHIS.COM
Download full manual at youfixthis.com

STEP 8

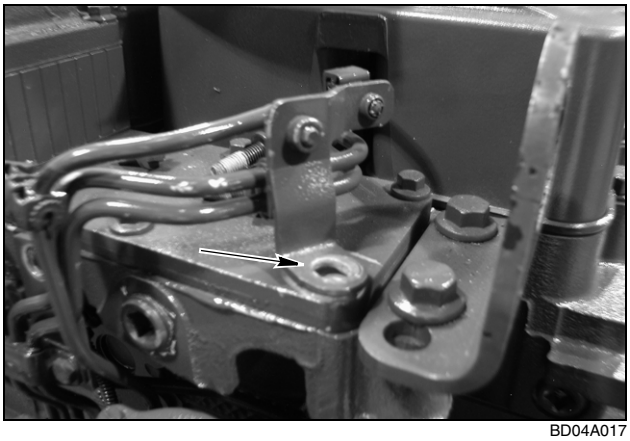

BD04A017

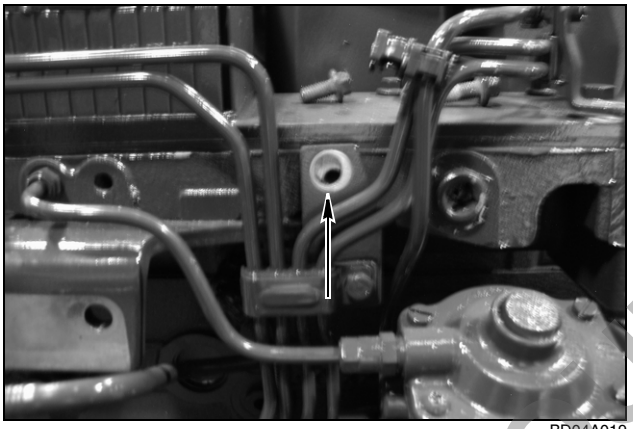

BD04A019

Remove the injector line retaining bracket mounting bolts.

STEP 9

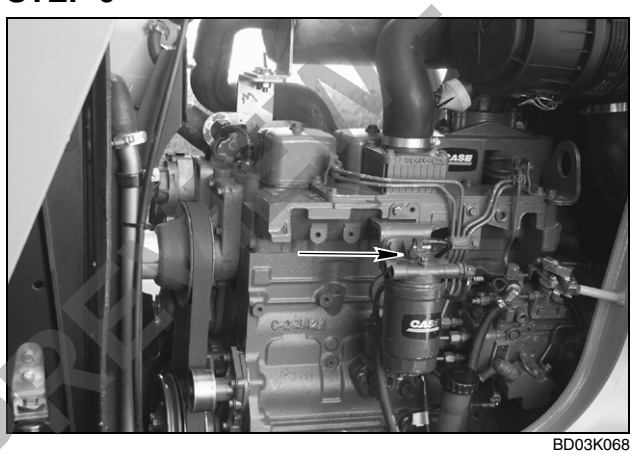

BD03K068

Remove fuel filter and mounting bracket from engine.

STEP 10

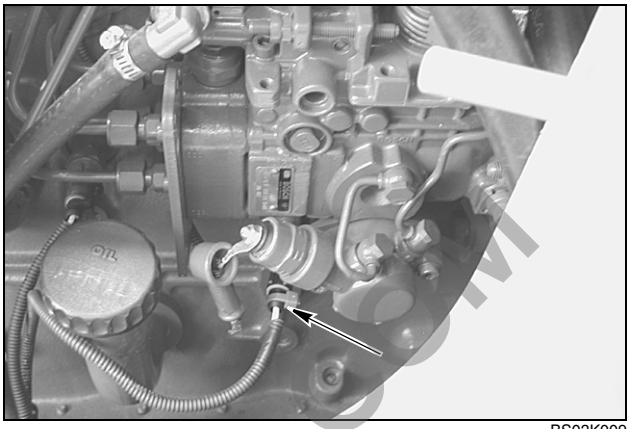

BS03K009

Disconnect the power lead to the injector pump.

STEP 11

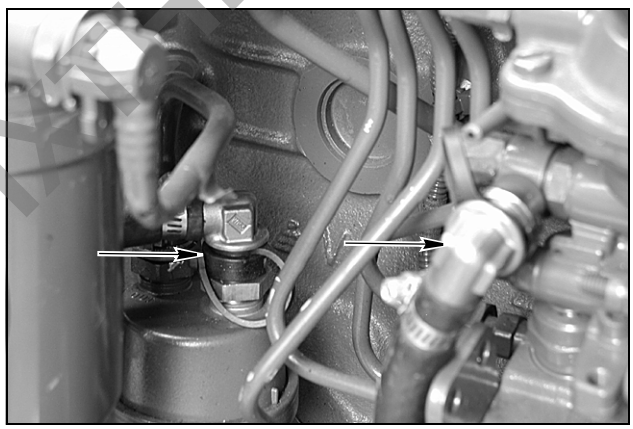

BS03K010

Disconnect the fuel inlet line from the fuel pump and fuel return line from the injector pump. Cover line and fitting to keep foreign material from entering the fuel system.

STEP 12

Remove the mechanical fuel pump and engine oil filler tube from the engine.

NOTE: *In the following photos the engine is shown removed from the machine, this is for clarity only, it is not required to remove the engine.*

PREVIEW - YOUFIXTHIS.COM

Download full manual at youfixthis.com

15 – Instrument Cluster

Check Points	Reading	Possible Cause of Bad Reading
Terminal A in connector to terminal for wire 34 at the alternator (2)	Continuity	Check the circuit between the connector and the alternator (2). Also check the alternator (2).
NOTE: *Disconnect the connector from the instrument cluster. Turn the key switch and driving lamp switch to ON. Apply the parking brake.*		
Terminal B in connector to ground	12 volts	Check the circuit between the connector and the key switch (8). Also check the 10 ampere fuse in the fuse block (13) and the key switch (8).
Terminal E in connector to ground	Continuity	Check the circuit between the connector and the oil pressure switch (20). Also check the oil pressure switch (20).
Terminal F in connector to terminal for wire 38 at the air filter restriction switch (19).	Continuity	Check the circuit between the connector and the air filter restriction switch (19). Also check the air filter restriction switch (19).
NOTE: *Have another person hold the key switch in the momentary ground position, halfway between ON and START.*		
Terminal F in connector to ground	Continuity	Check the circuit from the connector through the diode to the key switch (8). Check the diode in the circuit, see diode check (14). Also check the key switch (8).
Terminal for wire G to ground	Continuity	Check the circuit between the connector through the diode to the key switch (8). Also check the diode in the circuit see diode check (19). Also check the key switch (8).
NOTE: *Turn the key switch to ON.*		
Terminal J in connector to terminal for wire 37 at the engine coolant temperature switch (16)	Continuity	Check the circuit between the connector and the engine coolant temperature switch (16). Also check the engine temperature switch (16).
Terminal D in connector to terminal for wire 32T at the transmission temperature switch (21)	Continuity	Check the circuit between the connector and the transmission temperature switch (21). Also check the transmission temperature switch (21).
Terminal H in connector to terminal for wire 36P at the parking brake switches (23) and (24)	12 volts	Check the circuit between the connector and the parking brake switches (23) and (24). Also check the parking brake switches (23) and (24).
Terminal H in connector to terminal for wire 36P at the front axle temperature switch (17)	12 volts	Check the circuit between the connector and the front axle temperature switch (17). Also check the front axle temperature switch (17).
Terminal C in connector to terminal for wire 36F at the fuel level sender (22)	Continuity	Check the circuit between the connector and the fuel level sender (22). Also check the fuel level sender (22).
Terminal K in connector to ground	Continuity	Bad ground connection.
Terminal G in connector to terminal for wire 36H at the hydraulic filter switch (18).	Continuity	Check the circuit between the connector and the hydraulic filter switch (18). Also check the hydraulic filter switch (18).

PREVIEW - YOUFIXTHIS.COM

Download full manual at youfixthis.com

TABLE OF CONTENTS

SAFETY RULES 3
SPECIAL TOOLS 3
MAINTENANCE 4
Electrolyte Level 4
Inspecting and Cleaning a Battery 4
BATTERY TEST 5
Visual Checks 5
Specific Gravity Check 5
Capacity (Load) Test 6
CHARGING A BATTERY 7
Charging Guide For Maintenance Free Batteries 7
Charging Guide For Batteries Other Than Maintenance Free Batteries 8
PREPARING A DRY CHARGED BATTERY FOR USE 8

PREVIEW - YOUFIXTHIS.COM

Download full manual at youfixthis.com

8. Stop the engine and check for oil leaks.
9. Check the oil level in the hydraulic reservoir. Add oil as required. See Section 1002.
10. Hold the cover in place. Install the cap screws and flat washers that fasten the cover in place.



BD99F054

PREVIEW - YOUFIXTHIS.COM

Download full manual at youfixthis.com

STEP 49

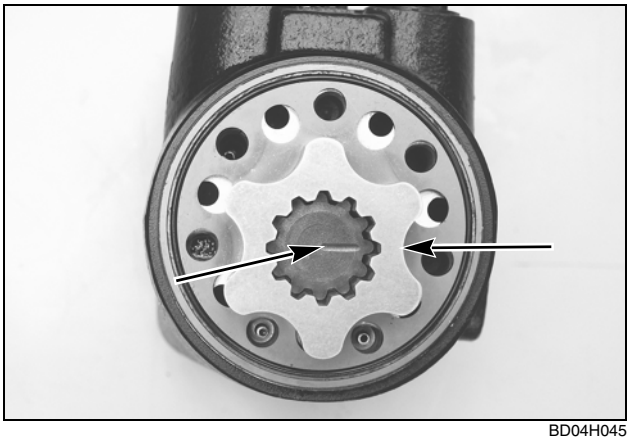

BD04H045

Align the timing mark on the drive shaft with a valley of the gerotor.

STEP 50

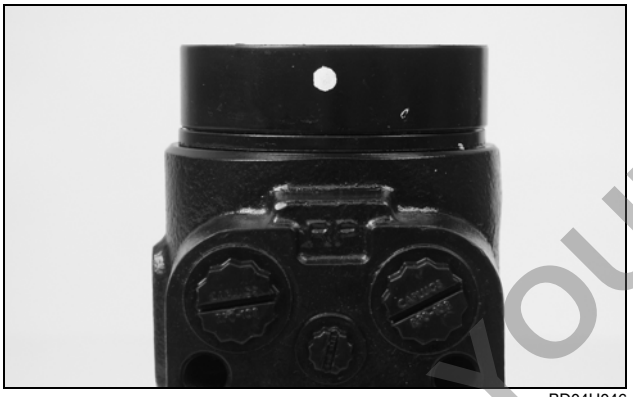

BD04H046

Align the marks made during disassembly, install the gerotor spacer,

STEP 51



BD04H047

Install a new O-ring in the gerotor spacer. Install the end plate on the metering gear set. Align the holes in the end plate with the holes in the stator.

STEP 52

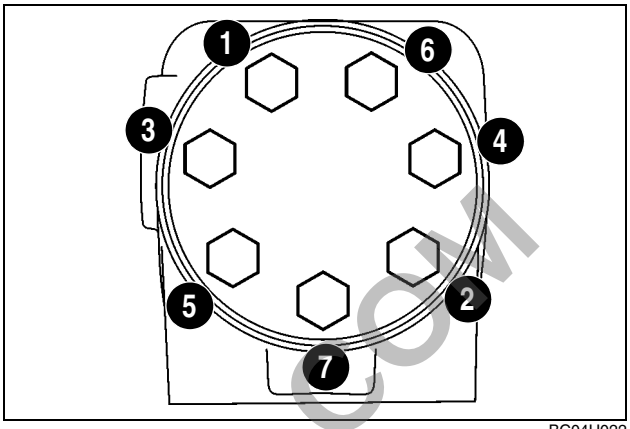

BC04H022

Torque the cap screws to a torque of 11 to 17 Nm (100 to 150 pound-inches) in the sequence shown. Then final torque the cap screws to a final torque of 25 to 31 Nm (225 to 275 pound-inches) in the sequence shown.

STEP 53

Assembled unit should rotate smoothly.

PREVIEW - YOUFIXTHIS.COM

Download full manual at youfixthis.com

STEP 35



B9111022M

Install a wheel bearing on the swivel housing. Installation will be easier if you heat the wheel bearing slightly. Do not heat the wheel bearing higher than 149° C (300° F). Use clean gear lubricant to lubricate the wheel bearing.

STEP 36

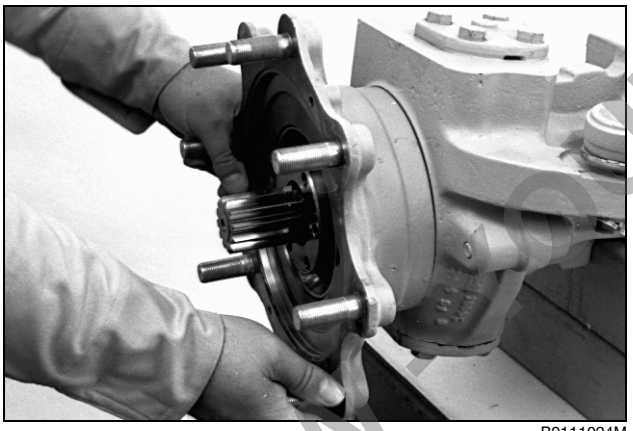

B9111024M

Install the planetary housing.

STEP 37

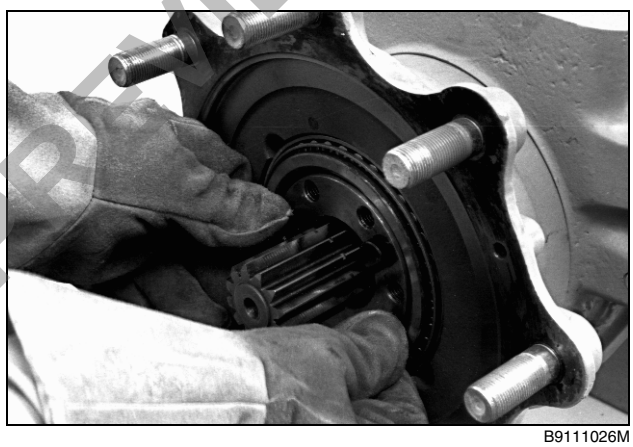

B9111026M

Install the outer wheel bearing. Installation will be easier if you heat the wheel bearing slightly. Do not heat the wheel bearing higher than 149° C (300° F).

STEP 38

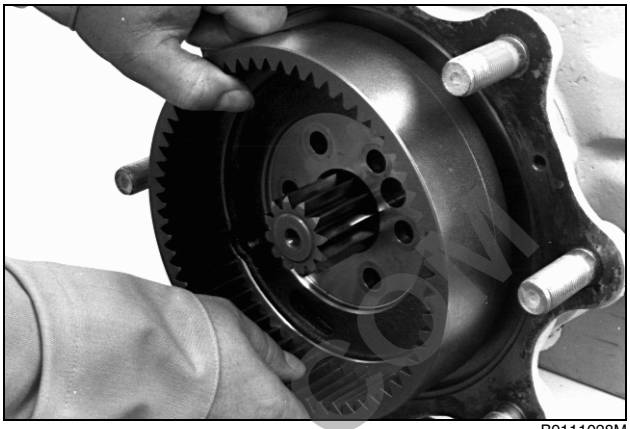

B9111028M

Align the holes in the hub with the holes in the swivel housing and install the ring gear.

STEP 39

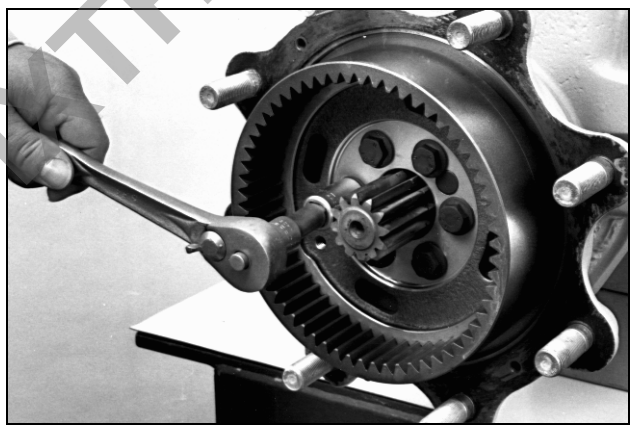

B9110724M

Put 270 Loctite in the female threads in the swivel housing. Install and tighten the bolts evenly to pull the hub against the swivel housing. Tighten the bolts to a final torque of 95 Nm (70 pound-feet).

STEP 40

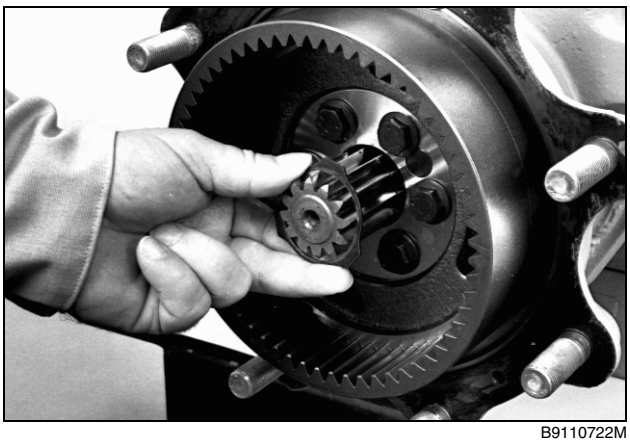

B9110722M

Install the thrust plate with the external tabs.

PREVIEW - YOUFIXTHIS.COM

Download full manual at youfixthis.com

TABLE OF CONTENTS

SPECIFICATIONS 3
TRANSMISSION 4
Removal 4
Installation 9
FRONT AXLE 14
Removal 14
Installation 16

PREVIEW - YOUFIXTHIS.COM

Download full manual at youfixthis.com

Test Two - Engine at 2200 r/min (2200 rpm)

NOTE: *All specifications shown were taken from a sampling of new production machines with less than 20 engine hours, your figures may differ slightly.*

Test Port	Item	Specifications - 2 Wheel Drive	Actual
1 and 2	Supply Pump Flow	62 to 70 L/min at 1379 kPa, 14 bar at 49° C (16.3 to 18.5 gpm at 200 psi at 120° F)	
1 and 2	Cold Oil By-Pass	3034 to 3310 kPa, 30.9 to 33.7 bar at 49° C (440 to 480 psi at 120° F)	
7	Differential Lock Pressure (FNR must be in forward or reverse)	1262 to 1317 kPa, 12.7 to 13.4 bar (183 to 191 psi)	
		Forward	
1	Pump Supply Pressure	1586 to 1655 kPa, 16.2 16.9 bar (230 to 240 psi)	
4	Regulated Clutch Pressure	1276 to 1379 kPa, 13.0 to 14.1 bar (185 to 200 psi)	
6	Torque Converter IN	827 to 965 kPa, 8.4 to 9.8 bar (120 to 140 psi)	
8	Torque Converter OUT	434 to 455 kPa, to 4.4 4.6 bar (63 to 65 psi)	
9	Lubrication Pressure	290 to 303 kPa, 3.0 3.1 bar (42 to 44 psi)	
		Neutral	
1	Pump Supply Pressure	862 to 965 kPa, 8.8 to 9.8 bar (125 to 140 psi)	
6	Torque Converter IN	724 to 862 kPa, 7.4 to 8.8 bar (105 to 125 psi)	
8	Torque Converter OUT	483 to 503 kPa, 4.9 5.3 bar (70 to 73 psi)	
9	Lubrication Pressure	414 to 434 kPa, 4.2 4.4 bar (60 to 63 psi)	
		Reverse	
1	Pump Supply Pressure	1558 to 1627 kPa, 15.9 16.6 bar (226 to 236 psi)	
5	Regulated Clutch Pressure	1276 to 1379 kPa, 13.0 14.1 bar (185 to 200 psi)	
6	Torque Converter IN	827 to 965 kPa, 8.4 9.8 bar (120 to 140 psi)	
8	Torque Converter OUT	393 to 414 kPa, 4.0 4.2 bar (57 to 60 psi)	
9	Lubrication Pressure	241 255 kPa, 2.5 2.6 to bar (35 to 37 psi)	

PREVIEW - YOUFIXTHIS.COM

Download full manual at youfixthis.com

Center Section

STEP 39



BP95F611

Use a chisel to loosen the cover.

STEP 40



BP95F614

Evenly pry the cover loose from the center housing.

STEP 41



BP95F613

Remove the cover.

STEP 42

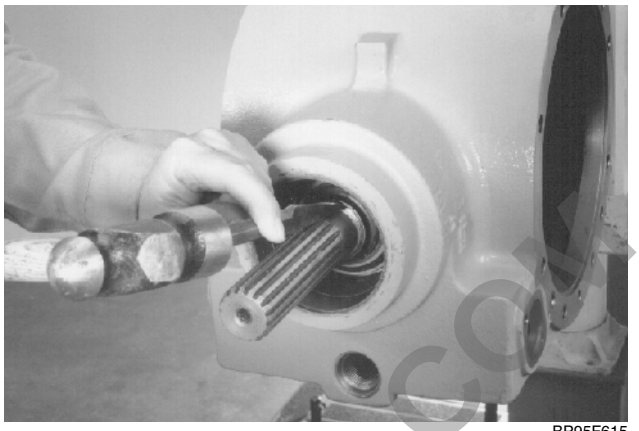

BP95F615

Use a chisel to push the peened area of the pinion nut out of contact with the groove in the shaft for the pinion gear.

STEP 43

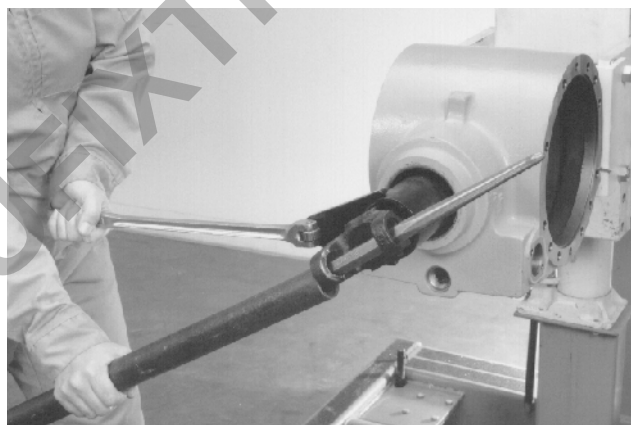

BP95F618

Use the CAS2151 and the P/N 144279A1 Yoke to loosen the pinion nut.

STEP 44



BP95F620

Remove the pinion nut.

PREVIEW - YOUFIXTHIS.COM

Download full manual at youfixthis.com

STEP 191

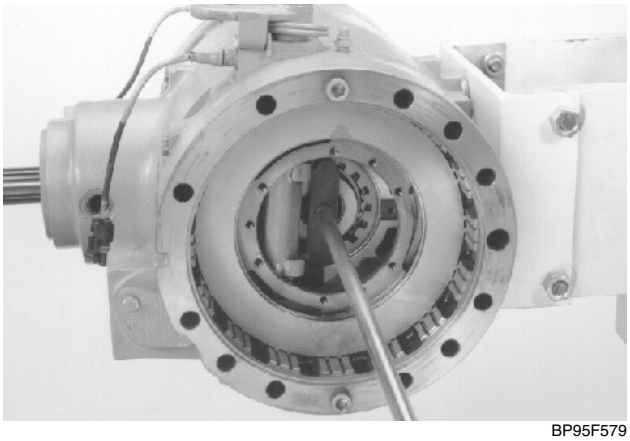

BP95F579

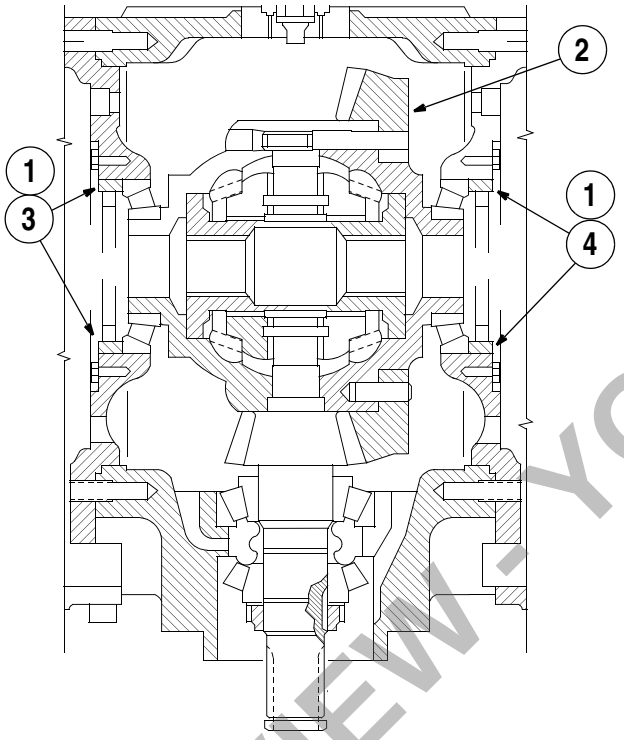

BT95G151

1. ADJUSTING RING
2. RING GEAR
3. TOOTH SIDE OF RING GEAR
4. BACKFACE SIDE OF RING GEAR

If there is not enough backlash, use the CAS2376 to loosen (turn counterclockwise) the adjusting ring one notch on the side shown. Then tighten (turn clockwise) the adjusting ring on the other side of the center section one notch. Continue with this step until the backlash is 0.20 to 0.28 mm (0.008 to 0.010 inch).

If there is too much backlash, use the CAS2376 to loosen (turn counterclockwise) the adjusting ring one notch on the side opposite of that shown. Then tighten (turn clockwise) the adjusting ring on the side shown one notch. Continue with this step until the backlash is 0.20 to 0.28 mm (0.008 to 0.010 inch).

STEP 192

Remove the dial indicator from the center section.

PREVIEW - YOUFIXTHIS.COM

Download full manual at youfixthis.com

STEP 90



BD01B153

Remove the thrust washer.

STEP 91



BD01B154

Remove the roll pin.

STEP 92



BD01B155

Tap lightly on the thrust plate to move the thrust plate down so that there is clearance between the snap ring and the thrust plate.

STEP 93

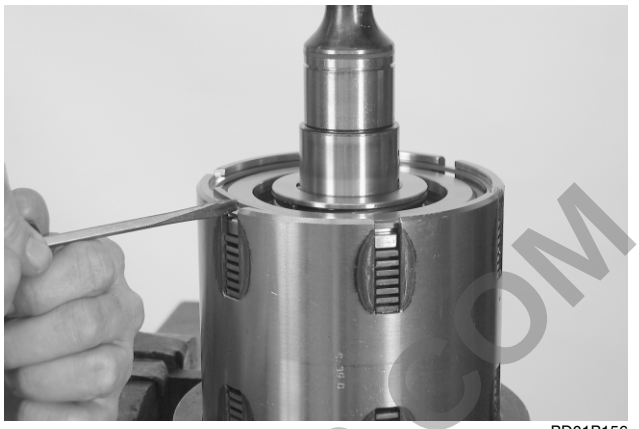

BD01B156

Tap lightly on the thrust plate to move the thrust plate down so that there is clearance between the snap ring and the thrust plate. Remove the snap ring.

STEP 94

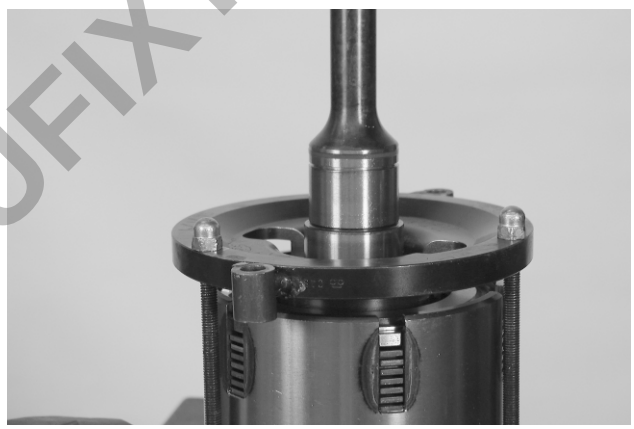

BD01B157

Install the top piece of the CAS-2379 special tool as shown. Use the three threaded rods and nuts to fasten the two pieces together.

PREVIEW - YOUFIXTHIS.COM

Download full manual at youfixthis.com

Inspection

STEP 243

Check the teeth on the gears for wear and damage. If a tooth is badly damaged, be sure to inspect the gear or spline that is in mesh with the damaged gear.

STEP 244

Check the splines on the secondary shaft for wear and damage. Check the passages in the secondary shaft to be sure that the passages are open and free of foreign material.

STEP 245

Check the bearings for flat areas, pitting, and other damage. Replace as necessary.

STEP 246

Check the teeth in the synchronizer assemblies for wear and damage. Replace as necessary.

STEP 247

Check for wear or damage to the steel rings and the bronze rings from the synchronizer assemblies. Check the springs in the synchronizer assemblies for wear, cracks, heat distortion, and other damage. Replace as necessary.

Assembly

NOTE: *Before each gear is installed on the secondary shaft, make sure that the bore of the gear and the outside diameter of the secondary shaft are completely lubricated with clean transmission oil.*

NOTE: *When you install snap rings on the secondary shaft, make sure that the ends of each snap ring are seated in the snap ring groove. Do not install a snap ring so that the ends extend into an axial slot on the secondary shaft.*

STEP 248



BD01B143

If equipped with four wheel drive, if the snap ring was removed from the shaft, install the snap ring as shown.

STEP 249

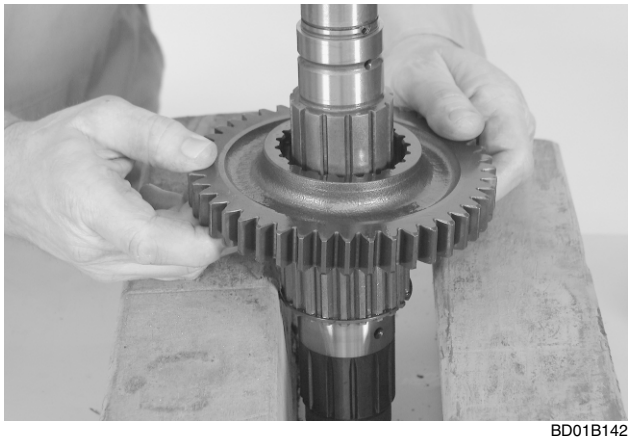

BD01B142

Put the secondary shaft on the bench so that the first-second gear end is up. You can use a vise with soft jaws to hold the secondary shaft in position. Install the four-wheel drive gear, if equipped.

PREVIEW - YOUFIXTHIS.COM

Download full manual at youfixthis.com

TRANSMISSION CONTROL VALVE

Disassembly

NOTE: *Some of the photos in the following procedure may not be the same as the model you are repairing. The repair procedure is the same.*

STEP 390

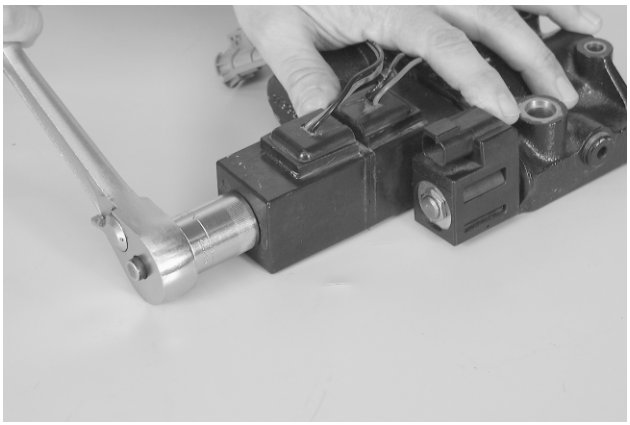

BD01B085

Remove the nut for the forward/reverse solenoid.

STEP 391

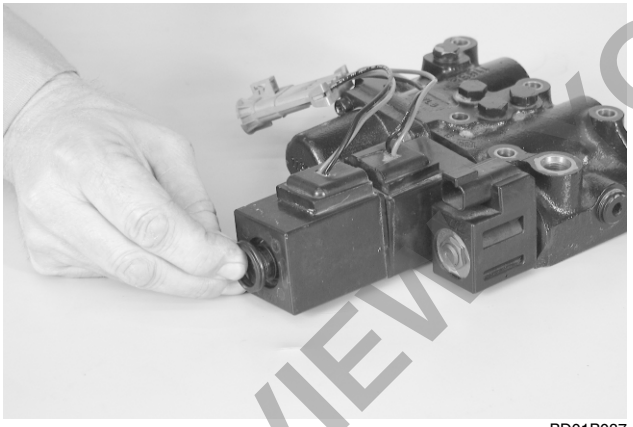

BD01B087

Remove the seal.

STEP 392

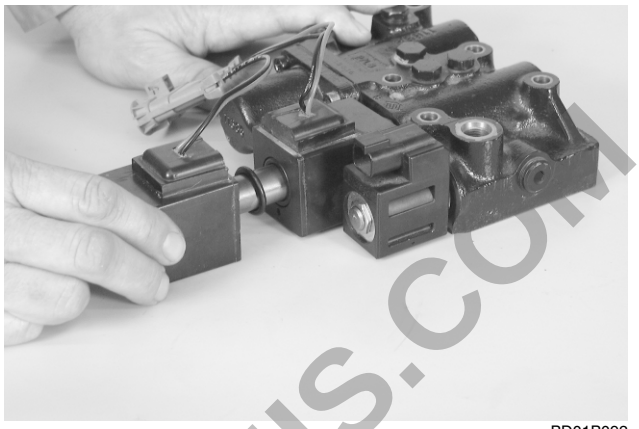

BD01B092

Remove the first solenoid coil.

STEP 393



BD01B093

Remove the O-ring from the either the solenoid coil or the solenoid plunger.

STEP 394

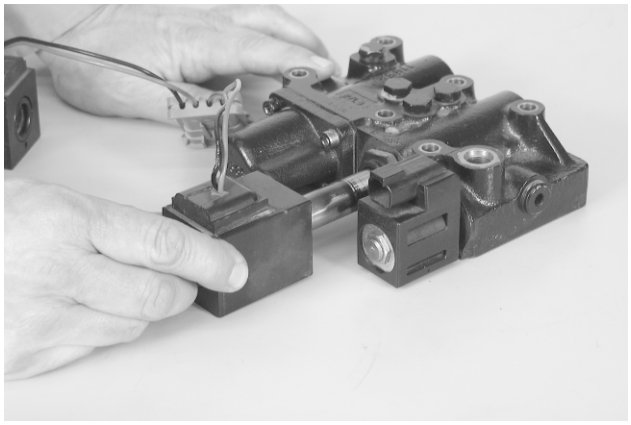

BD01B094

Remove the second solenoid coil.

PREVIEW YOUFIXTHIS.COM

Download full manual at youfixthis.com

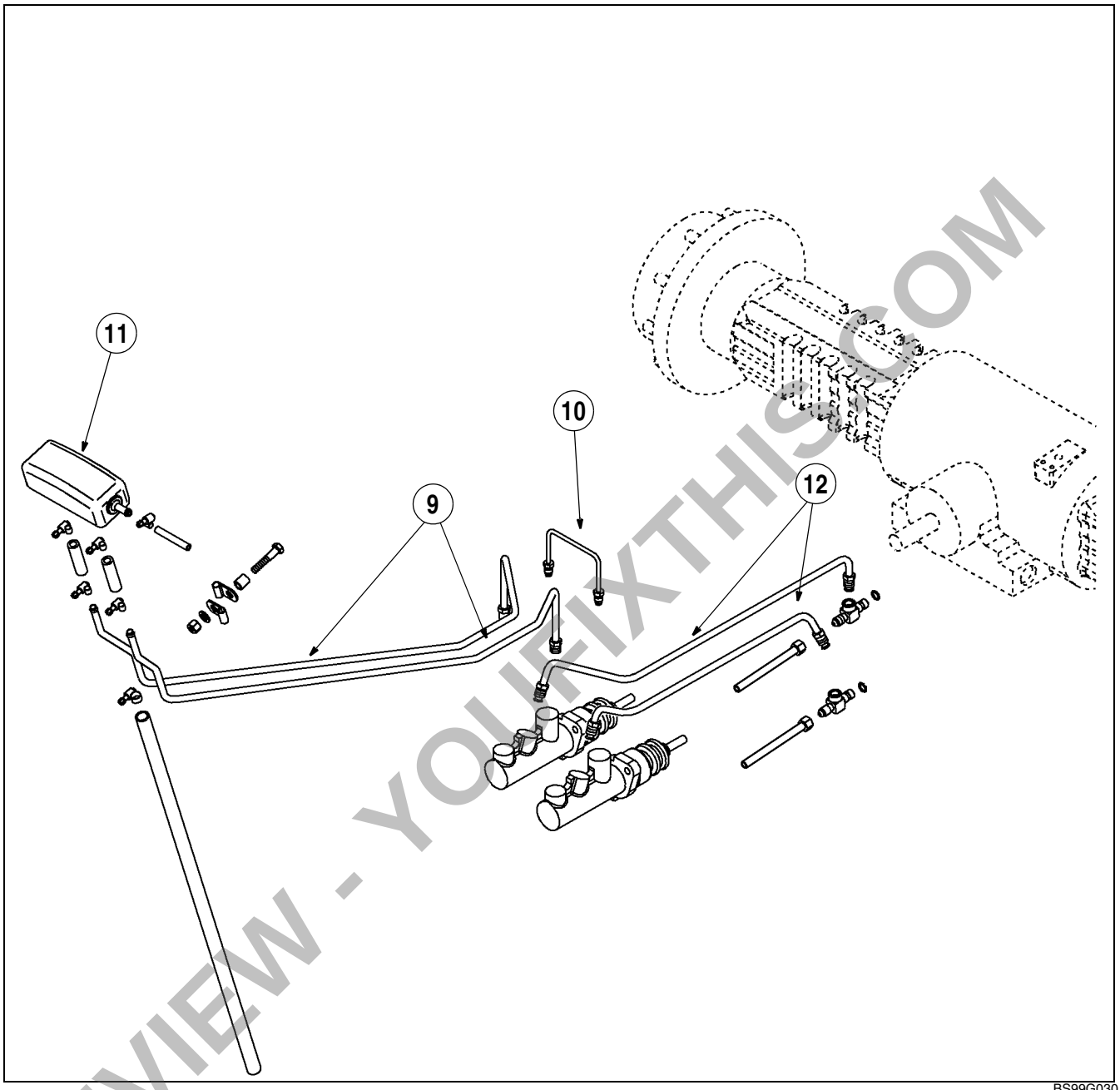

BS99G030

1. TUBE
2. TUBE
3. MASTER CYLINDER RESERVOIR
4. TUBE

MASTER CYLINDER HYDRAULIC INSTALLATION

PREVIEW - YOUFIXTHIS.COM

Download full manual at youfixthis.com

Installation

STEP 1

Using suitable lifting equipment, place the tilt cylinder into position on the machine.

NOTE: *Make sure spacers are installed on both ends of the tilt cylinder before installation. See illustration on page 21.*

STEP 2

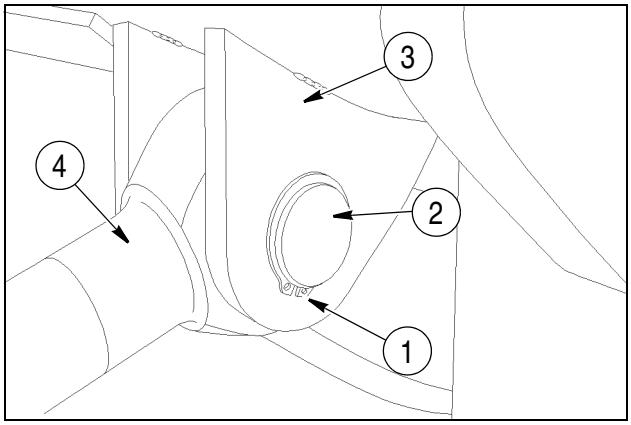

BD08C175-01

1. SNAP RING
2. PIN
3. UPPER MOUNT
4. TILT CYLINDER

Align cylinder with upper mount, install pin and snap ring.

STEP 3

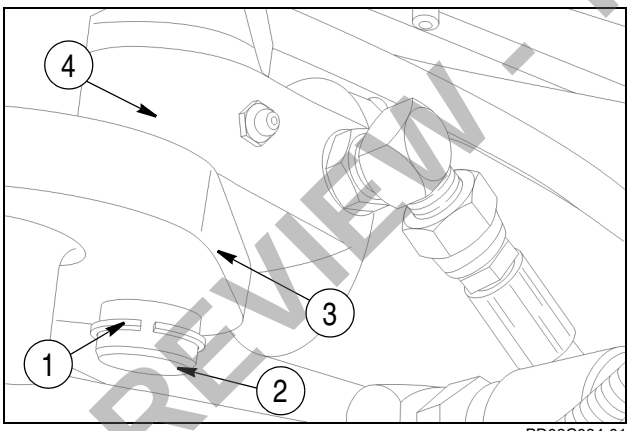

BD08C084-01

1. SNAP RING
2. PIN
3. LOWER MOUNT
4. TILT CYLINDER

Align cylinder with lower mount, install pin and snap ring.

STEP 4

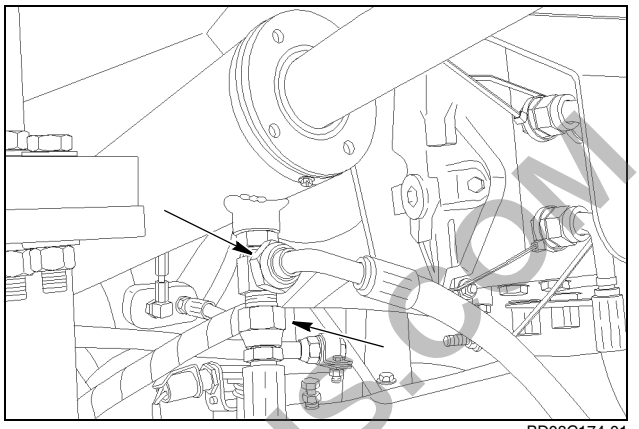

BD08C174-01

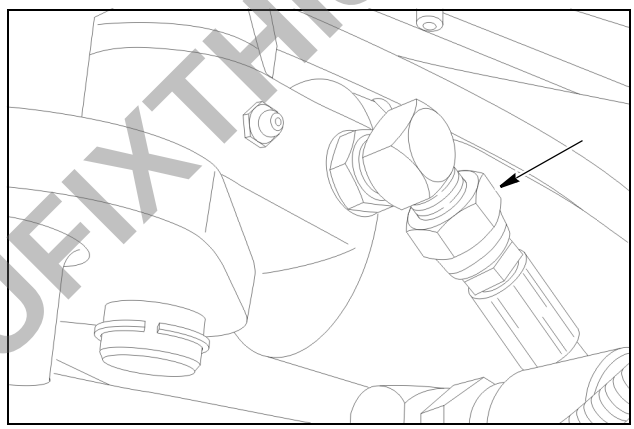

BD08C084-01

Remove plugs from hoses and caps from fittings. Connect the hydraulic hoses to the cylinder according to the identification tags, remove and discard tags.

STEP 5

Repeat Step 1 through Step 4 for installation of the other tilt cylinder

STEP 6

Turn off and disconnect the vacuum pump from the hydraulic reservoir.

STEP 7

Start the engine and let it run at low idle. Activate the control lever for the forks, side shift, and tilt for 15 to 20 seconds.

STEP 8

Stop the engine and check for leaks. Fill the hydraulic reservoir as required.

PREVIEW - YOUFIXTHIS.COM

Download full manual at youfixthis.com

Assembly

STEP 19

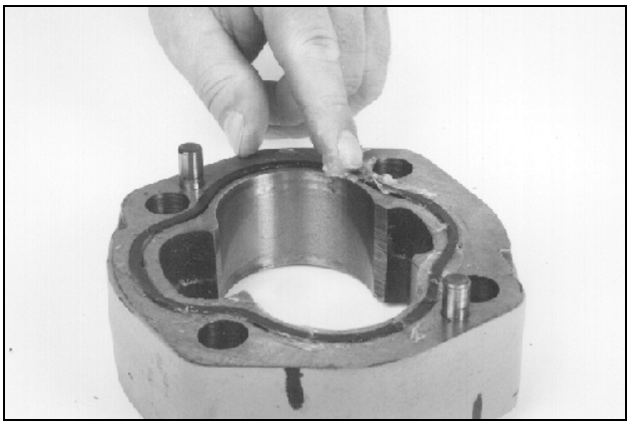

BP9502019

Install new quad rings in the grooves in the gear housing. Use petroleum jelly to hold the quad rings in position.

STEP 20

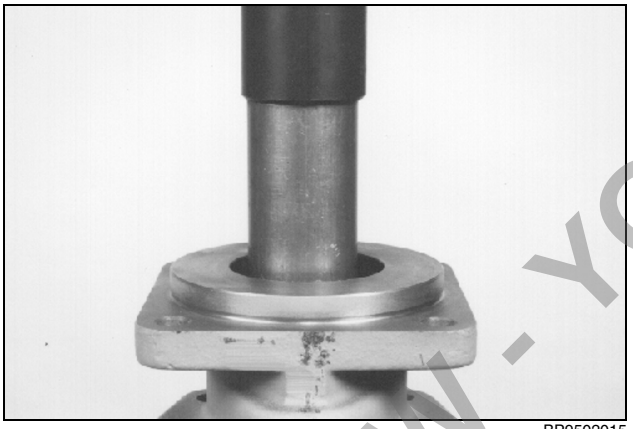

BP9502015

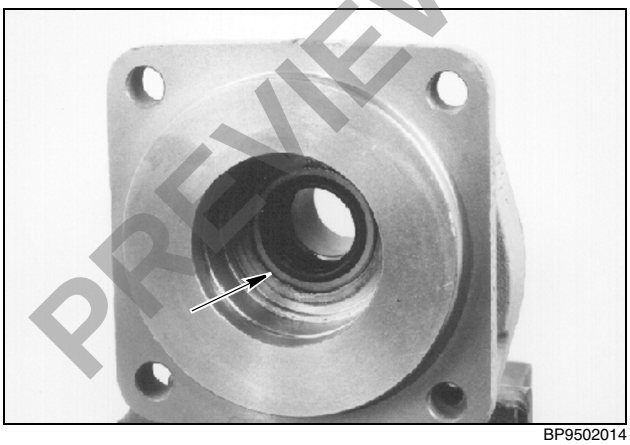

BP9502014

Apply Loctite Form-A-Gasket #3 sealant to the outer edge of a new seal and to the seal recess in the shaft end cover. Press the seal, with the metal side up, into the shaft end cover until the seal is even with the top of the seal recess. Wipe off any extra sealant.

STEP 21

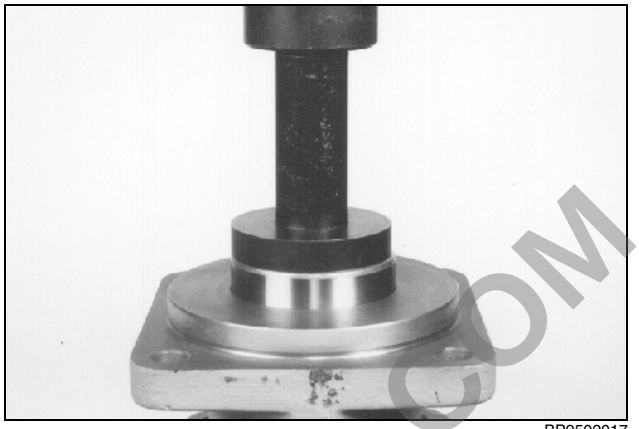

BP9502017

Press the bearing into the shaft end cover until the snap ring can be installed in the groove.

STEP 22

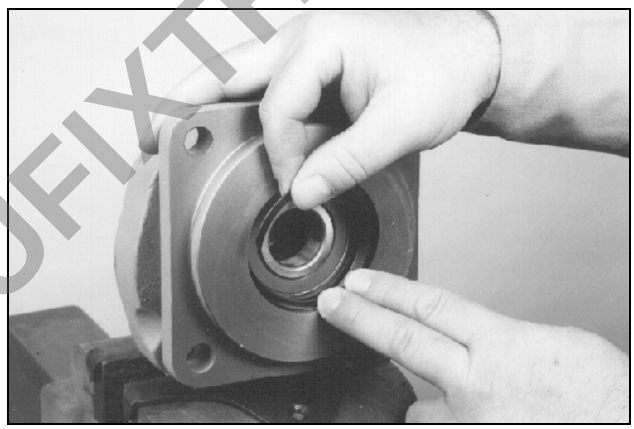

BP9502024

Install the snap ring.

STEP 23



BP9502020

Install new seals in the thrust plates.

PREVIEW - YOUFIXTHIS.COM

Download full manual at youfixthis.com

Assembly

NOTE: *If a new cap (2) or gland (4) is being installed, put the part number of the cylinder on the new part.*

1. Install a new backup ring (8) and O-ring (9) on the outside of the cap (2).
2. Install a new seal (15) and wiper (16) in the gland (4).
3. Install a new backup ring (13) on the outside of the gland (4). If both sides of the backup ring (13) are not flat, the side that is not flat must be toward the small end of the gland (4).
4. Install a new O-ring (14) next to the backup ring (13) in the groove on the outside of the gland (4). The O-ring (14) must be toward the small end of the gland (4).
5. Fasten the rod eye (5) in a soft-jawed vise.
6. Remove any marks and sharp edges on the chamfer at the end of the piston rod (18).
7. Lubricate the bore of the gland (4) with clean oil.
8. Push gland (4) onto the piston rod (18). If necessary, use a soft hammer to drive the gland (4) onto the piston rod (18).
9. Put a support below the piston rod (18) near the piston (3). Use a shop cloth between the support and the piston rod (18) to prevent damage to the piston rod (18).
10. Install a new O-ring (17) on the piston rod (18).
11. Lubricate the bore of the gland (4) with clean oil.
12. Push the gland (4) onto the piston rod (18). Be careful not to damage the O-ring (17).
13. Lubricate the threads of the piston rod (18). Install and torque lock nut (10) to 474-501 Nm (350-370 pound-feet)
14. Install a new O-ring (12) and seal (11) on the outside of the piston (3).Fasten the tube (1) in a soft-jawed vise. Be careful not to damage the tube (1).
15. Lubricate the inside of the tube (1) and the piston (3) with clean oil.
16. Start the tube (1) onto the piston rod assembly. Be careful not to damage the seal.
17. Push the piston (3) straight into the tube (1).
18. Lubricate the O-ring (14) on the gland (4) with clean oil.
19. When the piston (3) is in the smooth part of the tube (1), start the gland (4) into the tube (1)
20. Use a soft hammer to tap the gland (4) into the tube (1).
21. Fasten the clevis (5) in a vise or other holding equipment. Be careful not to damage the clevis (5).
22. Install studs (6) into the cap (2).
23. Lubricate the O-ring (9) on the cap (2).
24. Install cap (2) onto the tube (1).
25. Lubricate threads on the studs (6) with clean oil.
26. Install the nuts (7) and tighten to a torque of 58-63 Nm (43-47 pound-feet).
27. If the hoses were removed with the cylinder, install new O-rings, if equipped, on the hose fittings. Lubricate the O-rings with clean oil.

PREVIEW - YOUFIXTHIS.COM

Download full manual at youfixthis.com

PREVIEW ONLY

You're viewing 25 of 691 pages

The full manual includes:

- All 691 pages, complete
- Searchable PDF (find any keyword)
- No watermarks
- Instant download
- Print-ready quality

GET FULL MANUAL NOW

Case 586G, 588G Repair Manual

Scan or click anywhere
youfixthis.com

Click anywhere on this page to get the full manual