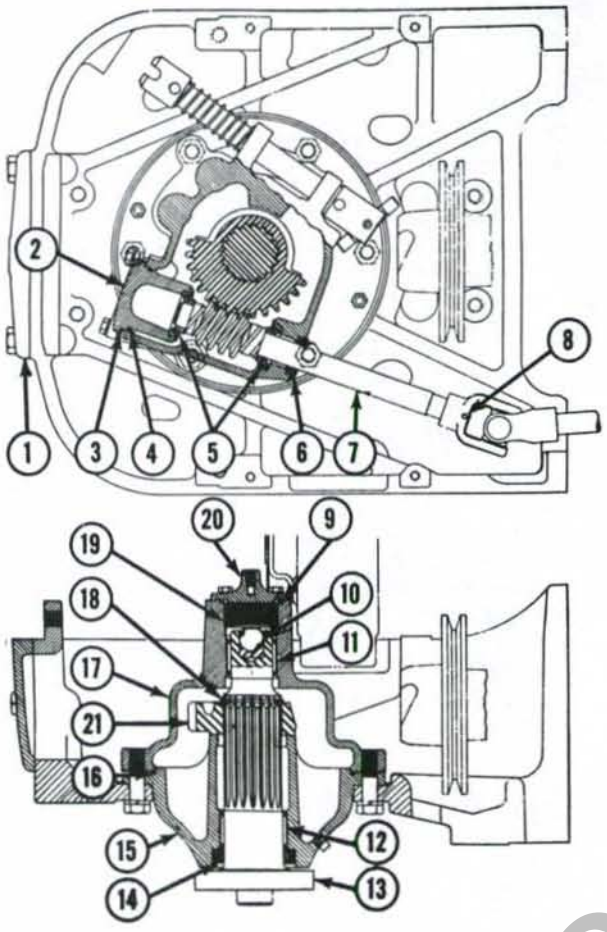

Fig. C507 — Components of the manual steering gear used on general purpose and high clearance tractors. Gear unit mesh and backlash is not adjustable.

1. Cover plate
2. Bearing carrier
3. Shims
4. "O" ring
5. Bearings
6. Oil seal
7. Worm shaft
8. Roll pin
9. "O" ring
10. Thrust ball
11. Upper needle bearing
12. Lower needle bearing
13. Upper steering spindle
14. Oil seal
15. Housing, lower half
16. "O" ring
17. Housing, upper half
18. Snap ring
19. Adjusting plug
20. Housing cover
21. Sector

the Torrington needle bearings. Arbor No. A8354 is used for installing the bearing in upper housing. Arbor No. A8352 is used for installing the bearing in lower housing.

Remove the wormshaft front bearing carrier (2) and withdraw the worm shaft from housing. The need and procedure for further disassembly is evident.

When reassembling, renew all "O" rings, gaskets and seals and when installing the sector gear, make certain that the single punch mark on steering spindle is located between the two punch marks on sector gear.

Adjust the gear unit as outlined in paragraphs 8 and 9.

Standard Non-Adjustable Axle Models

11. ADJUSTMENT. The steering gear unit is provided with three adjustments; one for the steering worm shaft end play, one for the sector shaft end play and the other for the front wheel turning angle. To make the adjustment, disconnect the drag link from the Pitman (drop) arm to relieve load from steering gear and slide the battery out and away from the gear housing.

12. WORM SHAFT END PLAY. To adjust the steering worm shaft bearings, remove the shaft front bearing carrier (1-Fig. C 508) and vary the

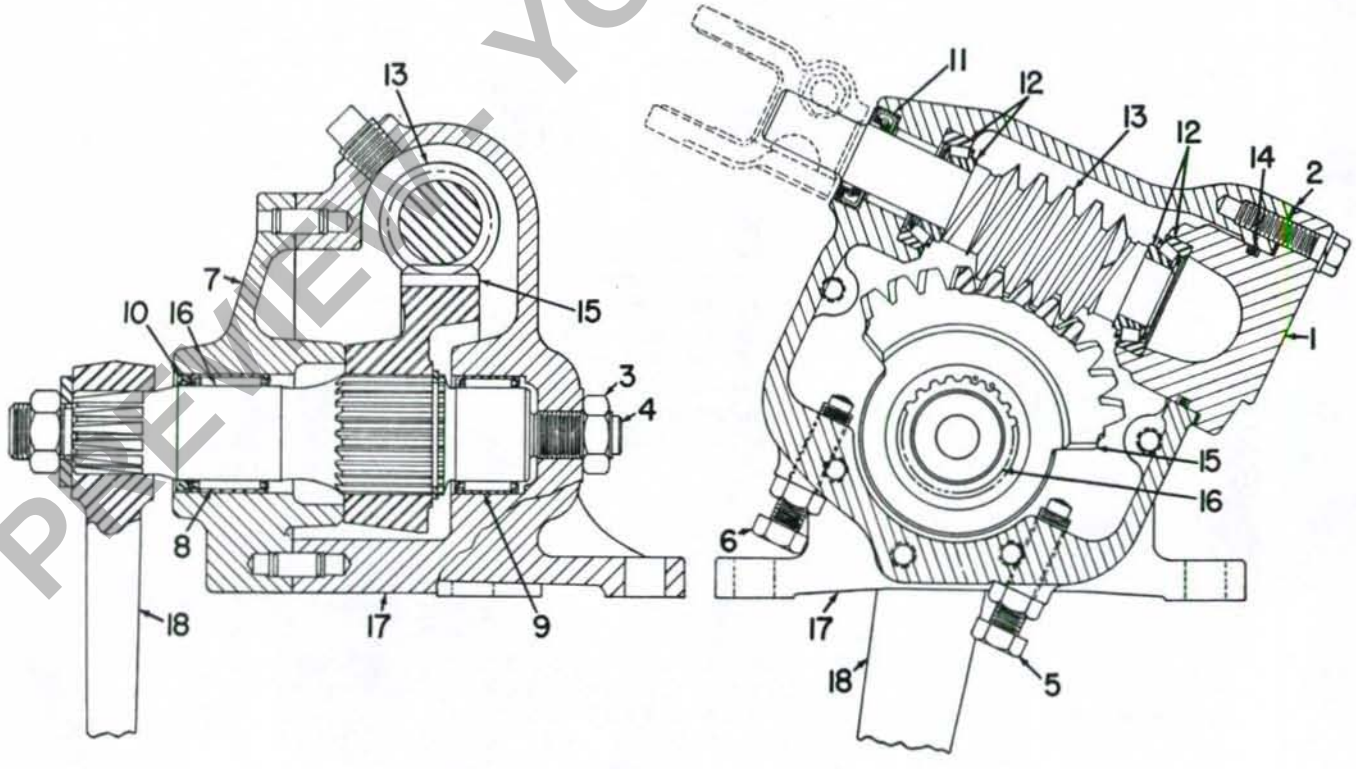

Fig. C508—Sectional views of manual steering gear used on standard non-adjustable axle models. Mesh position of the worm and sector gears is not adjustable.

1. Worm shaft bearing housing
2. Shims
3. Lock nut
4. Adjusting screw
5 & 6. Stop screws
7. Housing cover
8 & 9. Needle bearings
10. Oil seal
11. Oil seal
12. Worm shaft bearings
13. Worm shaft
14. "O" ring
15. Sector
16. Sector shaft
17. Gear housing
18. Pitman (drop) arm

PREVIEW YOUFIXTHIS.COM
Download full manual at youfixthis.com

sure on filter cartridge to assure filtration of fluid. Note: A plugged filter element can be the cause of fluid bubbling out of the filter cap air vent.

After installing a new filter element, check the fluid level and if necessary, bleed the system as follows:

16A. BLEEDING, GENERAL PURPOSE AND HIGH CLEARANCE MODELS. To fill and bleed the power steering system, remove grille, filler cap from reservoir and filler plug and bleed plug from gear housing. Refer to Fig. C514. Fill the gear housing with Automatic Transmission Fluid, Type A, and install the gear housing filler plug. Screw the bleed plug in the gear housing one or two threads. Fill the system reservoir with Automatic Transmission Fluid, Type A, start engine and run at low idle speed. Turn front wheels **PARTLY** to the right and left three or four times to pump fluid into the torque motor and lines. Stop engine and refill the reservoir. Continue this procedure several times to pump a safe amount of oil into the torque motor before making full turns. Continue this process until the reservoir fluid level remains constant and fluid appears at the bleed plug in gear housing. Tighten the bleed plug.

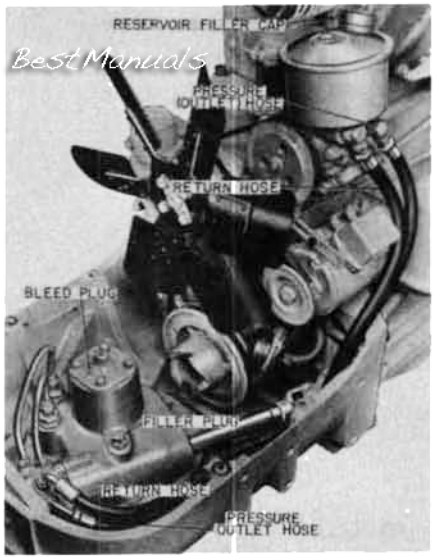

Fig. C514—Power steering components installed on general purpose and high clearance models. Notice the location of bleed plugs and filler plugs. The radiator is removed for illustrative purposes only.

16B. BLEEDING, STANDARD NON-ADJUSTABLE AXLE MODELS. To fill and bleed the power steering system, fill reservoir with Automatic Transmission Fluid, Type A, start engine and run at low idle speed. Disconnect the cylinder ram from the Pitman (drop) arm. Turn steering wheel to the right and left to pump fluid into the cylinder but stop turning the wheel before cylinder ram reaches the end of its stroke. Stop engine and refill reservoir. Continue this procedure several times to make certain there is oil in the cylinder before allowing the cylinder ram to make a full stroke. Continue this process, and allow the cylinder ram to make full extending and full retracting strokes until the reservoir fluid level remains constant. Reconnect the cylinder ram to the Pitman (drop) arm.

POWER STEERING SYSTEM TROUBLE SHOOTING CHART

	Loss of Power Assistance	Power Assistance in One Direction Only	Unequal Turning Radius	Erratic Steering Control	Fluid Foaming Out of Reservoir	Steering Cylinder Bottoming
Binding, worn or bent mechanical linkage	★		★	★		
Insufficient fluid in reservoir	★					
Faulty fan belt or pump drive belt	★			★		
Low pump pressure	★					
Internal leakage in torque motor (General Purpose and High Clearance models)	★					
Faulty or improperly installed control valve thrust bearing	★	★		★		
Valve thrust bearing nut improperly tightened	★			★		
Sticking or binding valve spool	★	★		★		
Faulty valve plungers and/or springs	★			★		
Improperly positioned steering shaft, restricting spool travel	★	★				
Check valve ball not seating	★				★	
Damaged or restricted hose or tubing	★	★			★	
Vane inlet and outlet connectors not seating on "O" rings, or "O" rings missing (General Purpose and High Clearance models)	★	★				
Pump to valve hose lines reversed	★					
Plugged balance passage at front of worm (General Purpose and High Clearance models)	★			★		
Wrong fluid in system	★			★	★	
Improperly adjusted tie rods			★	★		
Steering arms not postioned properly			★			
Timing marks on sector and shaft not aligned			★			
Vane and spindle timing marks not aligned (General Purpose and High Clearance models)			★			
Air in system				★	★	
Faulty flow control valve in pump				★		
Plugged filter element					★	
Internal leak in valve					★	
Faulty cylinder (Standard Non-Adjustable Axle models)	★			★		
Faulty stop screw adjustment (Standard Non-Adjustable Axle models)			★			★
Timing marks on sector shaft and arm not aligned (Standard Non-Adjustable Axle models)			★			
Faulty adjustment of cylinder retracted length (Standard Non-Adjustable Axle models)			★			★

Download full manual at youfixthis.com

SERVICE DATA

GENERAL	Series 400 Non-Diesel	Series 700B Non-Diesel	Series 800B Non-Diesel	Series 400 Diesel	Series 700B Diesel	Series 800B Diesel
Engine Make	Own	Own	Own	Own	Own	Own
Engine Model	400	251S	251S	.....	267D	267D
Number Cylinders	4	4	4	4	4	4
Bore—Inches	4	4	4	*	4⅛	4⅛
Stroke—Inches	5	5	5	5	5	5
Displacement—Cubic Inches	251	251	251	*	267	267
Compression Ratio, Gasoline and Diesel	6.5:1	6.5:1	6.5:1	15:1	15:1	15:1
Compression Ratio, Distillate	4.75:1	4.75:1	4.75:1	.....	.....	.....
Compression Ratio, LP-Gas	7.46:1	7.46:1	7.46:1	.....	.....	.....
Pistons Removed From?	Above	Above	Above	Above	Above	Above
Main Bearings, Number Of?	5	5	5	5	5	5
Main and Rod Bearings Adjustable?	No	No	No	No	No	No
Cylinder Sleeves	Wet	Wet	Wet	Wet	Wet	Wet
Electrical System Voltage	6 or 12	12	12	12	12	12
Generator and Starter Make?	A-L	A-L or D-R	A-L or D-R	A-L	A-L or D-R	A-L or D-R
TUNE-UP						
Firing Order	1-3-4-2	1-3-4-2	1-3-4-2	1-3-4-2	1-3-4-2	1-3-4-2
Valve Tappet Gap, Intake	0.012C	0.012C	0.012C	0.012C	0.012C	0.012C
Valve Tappet Gap, Exhaust	0.020C	0.020C	0.020C	0.012C	0.012C	0.012C
Valve Face Angle	45°	45°	45°	45°	45°	45°
Valve Seat Angle	45°	45°	45°	45°	45°	45°
Ignition Distributor Model (Wico)	X30169	X30169	X30169	.....	.....	.....
Ignition Distributor Model (Auto-Lite)	IAD-6003-1B	IAD-6003-1B	IAD-5003-1B	.....	.....	.....
Ignition Magneto Make	Own	Own	Own	.....	.....	.....
Ignition Magneto Model	41	41	41	.....	.....	.....
Ignition Timing, Retard	TDC	TDC	TDC	.....	.....	.....
Ignition Timing, Advanced—Distributor	26°	26°	**	.....	.....	.....
Ignition Timing, Advanced—Magneto	25° BTDC	25° BTDC	25° BTDC	.....	.....	.....
Injection Timing	.....	.....	.....	— See paragraph 119A, 120A or 121A —		
Timing Mark Location?	Crankshaft Pulley			Crankshaft Pulley		
Crankshaft Pulley Mark Indicating						
Retard Timing	Notch	Notch	Notch	.....	.....	.....
Advanced Timing	Deg. Notch	Deg. Notch	Deg. Notch	.....	.....	.....
Injection Timing	.....	.....	.....	Deg. Notch	Deg. Notch	Deg. Notch
Breaker Contact Gap, Distributor	0.020	0.020	0.020	.....	.....	.....
Breaker Contact Gap, Magneto	0.010	0.010	0.010	.....	.....	.....
Spark Plug Make	Ch. of A-C	Ch. or A-C	Ch. or A-C	.....	.....	.....
Model, Champion	8 Comm.	8 Comm.	8 Comm.	.....	.....	.....
Model, AC	85S Comm.	85S Comm.	85S Comm.	.....	.....	.....
Electrode Gap	0.025	0.025	0.025	.....	.....	.....
Carburetor Make, Gasoline and Distillate	M-S	M-S	M-S	.....	.....	.....
Carburetor Model, Gasoline and Distillate	TSX616	TSX616	TSX616	.....	.....	.....
Carburetor Float Setting	¼-inch	¼-inch	¼-inch	.....	.....	.....
Carburetor Make, LP-Gas	Ensign	Ensign	Ensign	.....	.....	.....
Carburetor Model, LP-Gas	Xg8833	Xg3896	Xg3896	.....	.....	.....
Engine Slow Idle rpm	600	600	600	600	600	600
Engine High Idle, No Load rpm	1600	1655	2000	††	1650	1950
Engine Full Load rpm	1450	1500	1800	††	1500	1800
SIZES—CAPACITIES—CLEARANCES						
(Clearances in Thousandths)						
Crankshaft Main Journal Diameter	2.9985	2.9985	2.9985	2.9985	2.9985	2.9985
Crankpin Diameter	2.7485	2.7485	2.7485	2.7485	2.7485	2.7485
Camshaft Journal Diameter	2.1215	2.1215	2.1215	2.1215	2.1215	2.1215
Piston Pin Diameter	1.35845	1.35845	1.35845	1.35845	1.35845	1.35845
Valve Stem Diameter, Intake	0.4025	0.4025	0.4025	0.4025	0.4025	0.4025
Valve Stem Diameter, Exhaust	0.4005	0.4005	0.4005	0.4005	0.4005	0.4005
Main Bearings, Running Clearance	2.0-4.6	2.0-4.6	2.0-4.6	1.6-4.6	1.6-4.6	1.6-4.6
Rod Bearings, Running Clearance	1.5-3.6	1.5-3.6	1.5-3.6	1.3-3.8	1.3-3.8	1.3-3.8
Piston Skirt Clearance	3-5	3-5	3-5	3.5-5.5	3.5-5.5	3.5-5.5
Crankshaft End Play	4-12	4-12	4-12	4-12	4-12	4-12
Camshaft Bearing, Diameter Clearance	1.4-5.4	1.4-5.4	1.4-5.4	1.4-5.4	1.4-5.4	1.4-5.4
Crankcase Oil, Including Filter—Quarts	9	9	9	9	9	9
Cooling System—Gallons	7.4	7.4	7.5	7.4	7.4	7.5
Transmission and Differential—Quarts	60	60	60	60	60	60
Hydraulic System, With Eagle Hitch—Quarts	10.5†	10.5†	10.5†	10.5†	10.5†	10.5†
Hydraulic System, Without Eagle Hitch—Quarts	9†	9†	9†	9†	9†	9†
Power Take-Off	—Uses same oil as hydraulic system—			—Uses same oil as hydraulic system—		
Power Steering—Quarts	***	***	***	***	***	***
Final Drive, High Clearance—Quarts	4.5	4.5	4.5	4.5	4.5	4.5
Main Fuel Tank—Gallons	21	22	22	21	22	22

*Series 400 Diesel prior to 8104711 same as 400 Non-Diesel. Series 400 Super Diesel same as 700B Diesel.

**When equipped with A-L dist. 26°; 28° with Wico.

***General purpose and high clearance, 3.75 quarts; others 2.0.

†Add one quart for each portable cylinder.

††Series 400 Diesel prior to 8104711 engine high idle no-load rpm is 1600, loaded rpm is 1450. Series 400 Diesel after 8104710 engine high idle no-load rpm is 1635, loaded rpm is 1500.

PREVIEW - YOUFIXTHIS.COM

Download full manual at youfixthis.com

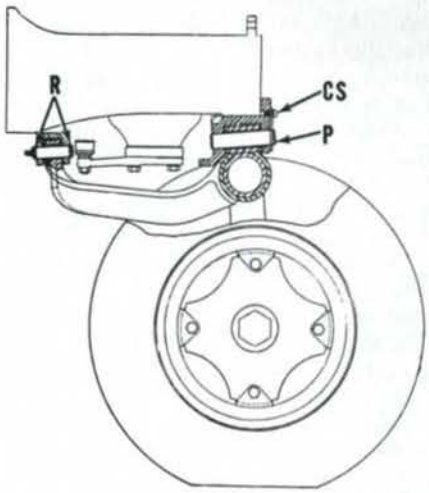

Fig. C504—Axle and radius rod pivot pins installation on models with an adjustable front axle.

AXLE PIVOT PINS AND BUSHINGS

Adjustable Axle Models

5. Radius rod is integral with the axle middle section on all adjustable axle models. To renew the axle and radius rod pivot pins and bushings, first place a floor jack under clutch housing and raise front of tractor enough to just take weight off of front wheels. Remove cap screws (CS—Fig. C504) retaining axle pivot pin (P) to pedestal and withdraw the axle pivot pin. Remove snap rings (R) from radius rod pivot pin and remove the pin. Raise front of tractor, allowing axle to drop down far enough to remove the pivot pin bushings from axle and integral radius rod. New bushings should be final sized after installation, if necessary, to provide a free running fit for the pivot pins. Pivot pin diameters are as follows:

General Purpose Models
Front 1.246-1.247
Rear 0.997-0.998
High Clearance Models
Front 1.745-7.747
Rear 1.495-1.497

Standard Axle Models

6. Radius rod is bolted to axle main member. To renew the axle pivot pin and bushing, place a floor jack under clutch housing and raise front of tractor enough to just take weight off of front wheels. Unbolt the radius rod at rear end, remove the axle pivot pin retaining snap ring and remove the pivot pin (P—Fig. C503). Raise front of tractor, allowing axle to drop down far enough to remove the pivot pin bushing from axle main member. New bushing should be final sized after installation to provide a free fit for the pivot pin.

MANUAL STEERING SYSTEM

General Purpose and High Clearance Models

7. **ADJUSTMENT.** The steering gear unit is provided with two adjustments; one for the upper steering spindle end play, the other for the steering worm shaft end play. To make the adjustments, raise front of tractor to remove load from steering gear and remove the grille screen.

8. WORM SHAFT END PLAY. To adjust the steering worm shaft, remove cover (1—Fig. C505) and remove the worm shaft front bearing carrier (2). Vary the number of shims (3) located between the bearing carrier and the housing to remove all shaft end play without causing any binding tendency. Shims are available in thicknesses of 0.003, 0.005 and 0.010.

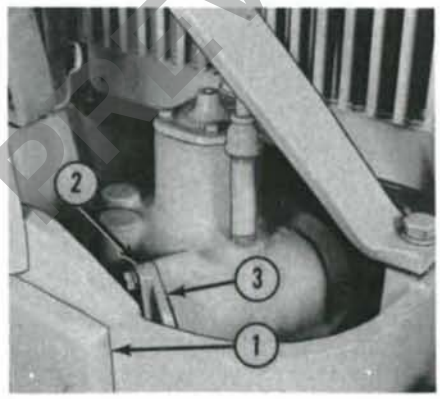

Fig. C505—Manual steering gear installation on general purpose and high clearance tractors. Steering worm shaft end play is adjusted with shims (3) between gear housing and front bearing carrier (2).

9. UPPER SPINDLE END PLAY. To adjust the upper spindle end play, remove the gear housing top cover as shown in Fig. C506 and tighten plug (19) to remove all spindle end play; then, back-off the plug until projection (P) on upper cover will engage slot in the adjusting plug. Before installing the upper cover, make certain that "O" ring (9) is in position.

10. **R & R AND OVERHAUL.** To remove the steering gear housing assembly, first drain cooling system and remove hood, radiator screen, grille and radiator. Raise front of tractor and unbolt lower spindle on dual wheel tricycle models, wheel fork on single wheel tricycle models or center arm on adjustable axle models from the upper steering spindle. Disconnect the steering worm shaft front universal joint, unbolt and remove the steering gear housing assembly from tractor.

Drain lubricant from housing and remove upper cover (20—Fig. C507) and adjusting plug (19). Unbolt and separate upper gear housing (17) from lower housing (15). Remove snap ring (18) and withdraw sector (21). Withdraw upper spindle from lower housing. Needle bearing (11) in upper housing, needle bearing (12) and seal (14) in lower housing can be renewed at this time.

Note: Special arbors are available from the J. I. Case Co., for installing

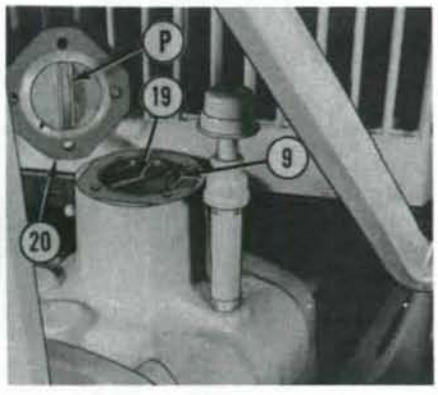

Fig. C506 — Manual steering gear for general purpose and high clearance models. Upper spindle end play is adjusted with plug (19). "O" ring (9) must be in good condition.

PREVIEW - YOUFIXTHIS.COM
Download full manual at youfixthis.com

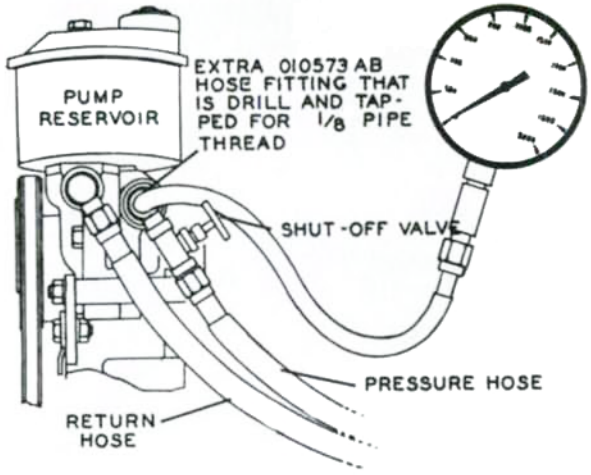

Fig. C515—Pressure gage and shut-off valve installation for checking the power steering system operating pressure.

TROUBLE SHOOTING

All Models

17. The accompanying table lists troubles which may be encountered in the operation of the power steering system. The procedure for correcting most of the troubles is evident; for those not readily remedied, refer to the appropriate subsequent paragraphs.

SYSTEM OPERATING PRESSURE

All Models

18. A pressure test of the hydraulic circuit will disclose whether the pump or some other unit in the system is malfunctioning. To make such a test proceed as follows:

Connect a pressure test gage and a shut-off valve in a manner similar to that shown in Fig. C515. Note that shut-off valve is connected in the circuit between the gage and the control valve on the worm shaft. Open the shut-off valve and run the engine at idle speed until oil is warmed. Rotate the front wheels of the tractor to extreme right or extreme left turn position and note gage reading which should be in the range of 725-825 psi on early production 400 series general purpose and high clearance tractors with an 800 psi relief valve; 800-900 psi on late production 400 series and all 700B and 800B general purpose and high clearance tractors with an 1100 psi relief valve; 1025-1125 psi on 400, 700B and 800B standard non-adjustable axle models with an 1100 psi relief valve. Note: To avoid heating the steering fluid excessively, don't hold wheels in this test position for more than 30 seconds. Note also that the pressure reading for general purpose and high clearance models equipped with an 1100 psi relief valve is lower than might be expected. This is due to a normal pressure drop in the torque motor.

If the pressure is higher than specified, the relief valve is probably stuck in the closed position. If the pressure is less than specified, turn the wheels to straight ahead position; at which time, the gage reading should drop considerably. Now slowly close the shut-off valve and retain in closed position only long enough to observe the gage reading. Pump may be seriously damaged if valve is left in closed position for more than 10 seconds. If the gage reading increases to 725-825 psi on all models with an 800 psi relief valve or 1025-1125 psi on all models with an 1100 psi relief valve, with valve closed, the pump is O.K. and the trouble is located in the control valve, the power cylinder (or torque motor) or the connections.

While a low pressure reading with the shut-off valve closed indicates the need of pump repair, it does not necessarily mean the remainder of the system is in good condition. After overhauling the pump, recheck the pressure reading to make sure the control valve, cylinder (or torque motor) and connections are in satisfactory operating condition.

Refer to paragraph 19 or 20A for data concerning the flow control and relief valve.

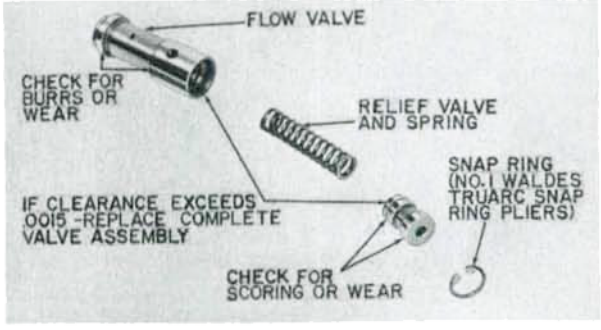

Fig. C517—Exploded view of the combination flow control and pressure relief valve. Both 800 and 1100 psi relief valves are used.



Fig. C516—Details of combination flow control and pressure relief valve mounted in cover of power steering hydraulic pump. Flow valve limits output to a fixed quantity regardless of pump speed.

PUMP AND FLOW CONTROL VALVE

All Series 400-Early Series 700B-800B

19. **FLOW CONTROL AND RELIEF VALVE.** This combination valve can be removed from the pump by removing the outlet hose fitting bolt and valve cap fitting (Fig. C516). The spring and valve can then be lifted out without removing the pump from the engine. Valve can be disassembled by removing the snap ring (Fig.—C517) from flow valve. Remove any slight

PREVIEW - YOUFIXTHIS.COM

Download full manual at youfixthis.com

examine all parts for being damaged or worn. The valve spool and body are mated parts and must be renewed as an assembly. The plungers and springs are available separately. The check valve in the return port of valve body can be removed with a screw driver and must be renewed as an assembly.

Inspect the brass tube seats in valve body. If they are damaged, tap the seats for a $\frac{5}{16}$-16 NF thread and remove the seats using a screw and nut puller arrangement. Press new seats into position, using the valve to housing tube as shown in Fig. C526.

When reassembling, be sure to lubricate all parts in Automatic Transmission Fluid, Type A. Install the valve spool so that the identification groove is located toward same side of body as the port identification symbols "PR" and "RT" are located. There is no particular order for installing the plungers and springs, but the plungers must have free movement and there must be one active plunger between the two inactive plungers as shown in Fig. C527.

23. To install the valve assembly, proceed as follows: Install the rear thrust bearing assembly on the wormshaft, then install the body with the port return and the pressure identification symbols toward front. Install the front thrust bearing assembly with the larger diameter washer toward the valve. Install the adjusting plate (Case Part No. A-8342) with the three original $\frac{5}{8}$ x3 $\frac{3}{4}$ inch cap screws and washers and tighten the screws to a torque of 30 Ft.-Lbs. Refer to Fig. C528A. Install the nut lock washer and thrust bearing nut and tighten the nut to a torque of 20 Ft.-Lbs. Remove the A-8342 adjusting plate, install the valve cap and tighten the cap screws to a torque of 30 Ft.-Lbs.



Fig. C526—Using one of the tubes to press the brass tube seats in the valve body.

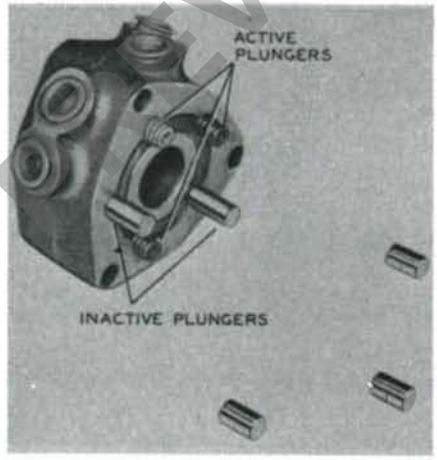

Fig. C527—There must be one of the active plunger sets between the two inactive plungers.

23A. On standard non-adjustable axle models, install the complete gear unit on tractor and make the following adjustment:

Loosen the steering shaft universal joint clamp bolt and pull the steering wheel and shaft rearward as far as possible; then, allow the steering shaft to move forward until there is a clearance (x-Fig. C528B) between the universal joint and gear housing of $\frac{3}{32}$-inch for all standard non-adjustable axle models except special production tractors (402, 412, 702B, 712B, 802B and 812B). Clearance at (x—Fig. C528B) should be $\frac{1}{8}$-$\frac{1}{4}$-inch for special production models (model numbers 402, 412, 702B, 712B, 802B and 812B).

GEAR HOUSING, WORMSHAFT AND TORQUE MOTOR

General Purpose and High Clearance Models

24. **WORMSHAFT-R&R AND OVERHAUL.** To remove the steering wormshaft, first remove the valve unit as in paragraph 21A. Remove the radiator side panel and drive out the roll pin retaining the steering shaft front universal joint to the wormshaft. Remove the wormshaft front bearing carrier and turn the wormshaft out of the housing. Refer to Fig. C529. The rear dust seal and quad-ring seal can be renewed at this time without removing the seal carrier. Note: Early series 400 general purpose models were fitted with a single lip type seal at the rear of the wormshaft. The late style seal carrier and seals can be installed on early models without modifying the housing. A good sealing compound should be applied to O. D. of carrier before installation. If the wormshaft rear needle bearing requires renewal, it will be necessary to remove the seal carrier. Install the rear bearing from rear of housing, using Case arbor No. A-9817 or equivalent, until shoulder on arbor seats against the seal carrier seating surface in housing. Press against end of bearing which has the stamped identification numbers. In-

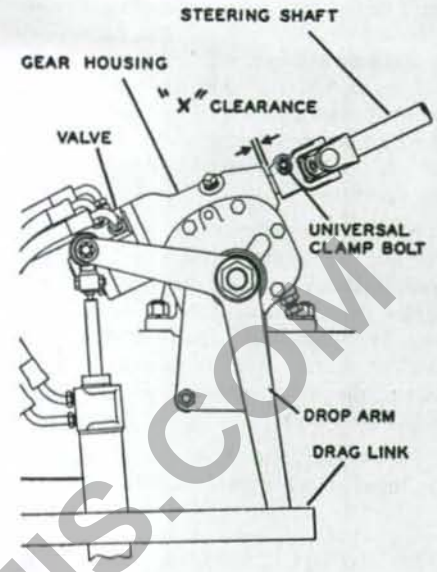

Fig. C528B—Checking the clearance between the steering shaft universal joint and gear housing on power steering equipped standard non-adjustable axle models.

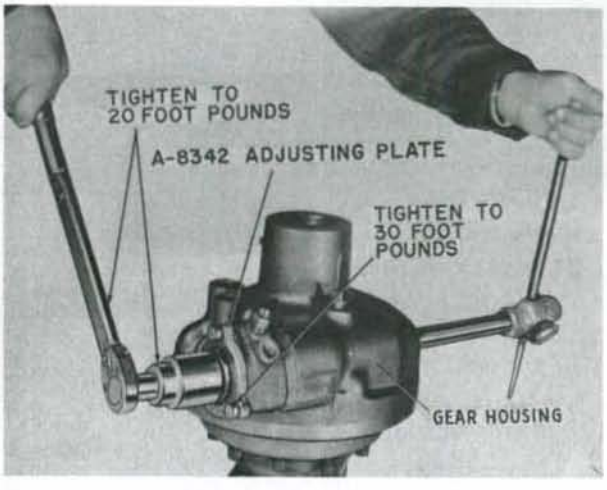

Fig. C528A — Tightening the power steering valve thrust bearing nut while using Case No. A-8342 adjusting plate to hold the valve in position.

REVIEW YOUFIXTHIS.COM

Download full manual at youfixthis.com

COOLING SYSTEM

RADIATOR

138. To remove the radiator, drain cooling system and remove hood and grille. On models so equipped, disconnect the shutter control wire. Disconnect the radiator hoses, then unbolt and remove radiator from tractor.

THERMOSTAT

139. Thermostat is located in the thermostat housing which is bolted to front of water manifold. The renewal procedure is evident. The thermostat starts to open at 175-180 degrees F. and is fully open at 195 degrees F.

WATER PUMP

140. **R&R AND OVERHAUL.** To remove the water pump, drain cooling system and remove hood and radiator. Disconnect hoses, remove fan blades and belt and unbolt pump from cylinder block. With the pump removed from tractor, remove the impeller with a suitable puller attached to the two threaded holes. Remove pulley from pump shaft, extract snap ring (2—Fig. C612) and bump shaft and bearing assembly out of pump body. Press seal out of pump body with a ¾ inch rod. Running clearance between pump shaft and bushing should be 0.0015-0.0035. Inside diameter of bushing (3) should be 0.874-0.875.

Renew the bushing and/or shaft if the running clearance exceeds 0.005. Bushing will not require final sizing if it is installed, using a closely fitting arbor.

Install bearing (1) so that shielded face is toward front of tractor. Pack the cavity between bushing and bearing with No. 2 gun grease. Do not use water pump grease. Press the impeller on the pump shaft until the distance from the rear face of impeller to gasket face of pump body is 1.130-1.140.

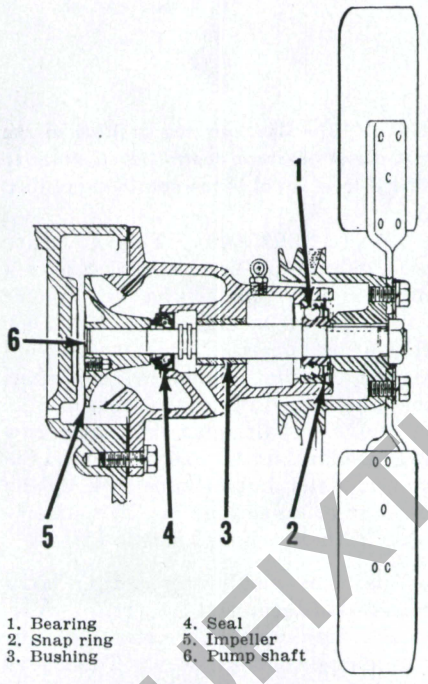

1. Bearing
2. Snap ring
3. Bushing
4. Seal
5. Impeller
6. Pump shaft

Fig. C612—Sectional view of the water pump. Shielded side of bearing (1) goes toward front of tractor.

IGNITION AND ELECTRICAL SYSTEM

DISTRIBUTOR

141. Either an Auto-Lite No. IAD-6003-1B or a Wico No. X30169 battery ignition distributor may be used on Series 400, 700B and 800B tractors. Specification data on both distributors are as follows:

Auto-Lite IAD6003-1B

Breaker contact gap.....0.018-0.022
Breaker arm spring pressure.17-20 oz.
Cam angle .....42 degrees
Condenser capacity
(microfarads) 0.023-0.026

Advance data is in distributor degrees and distributor rpm.

Start advance ..... 0° @ 275 rpm
Intermediate advance .. 1° @ 310 rpm
Intermediate advance .. 7° @ 490 rpm
Intermediate advance ..12° @ 645 rpm
Maximum advance ....13° @ 680 rpm

Wico X30169

Breaker contact gap.....0.019-0.022
Breaker arm spring pressure.20-28 oz.
Cam angle.....45 degrees
Condenser capacity
(microfarads) 0.30-0.34

Advance data is in distributor degrees and distributor rpm.

Start advance ..... 0° @ 275 rpm
Intermediate advance.. 1° @ 300 rpm
Intermediate advance..10° @ 500 rpm
Maximum advance ...14° @ 1000 rpm

142. **INSTALLATION AND TIMING.** With the oil pump properly installed (Refer to paragraph 79), crank engine until number one piston is coming up on compression stroke and continue cranking until the "DC" mark on crankshaft pulley is in register with pointer on timing gear cover as shown in Fig. C613. Install the distributor so that rotor arm is in the number one firing position and adjust the breaker contact gap to 0.020. Loosen the distributor clamp bolt, turn the distributor either way as required until breaker contacts are just beginning to open and tighten the clamp bolt. With the engine running at the high idle, no-load speed the spark should occur 26 degrees BTDC for all tractors equipped with the Auto-Lite distributor, 26 degrees BTDC for series 700B tractors equipped with the Wico distributor, 28 degrees for series 800B tractors equipped with the Wico distributor. Firing order is 1-3-4-2.

PREVIEW - YOUFIXTHIS.COM
Download full manual at youfixthis.com

PREVIEW ONLY

You're viewing 7 of 78 pages

The full manual includes:

- All 78 pages, complete
- Searchable PDF (find any keyword)
- No watermarks
- Instant download
- Print-ready quality

GET FULL MANUAL NOW

J.i.case 400, 401, 402, 403, 405, 410, 411, 412, 413, 415, 420, 425, 700B, 701B, 702B, 703B, 705B, 710B, 711B, 712B, 713B, 715B, 800B, 801B, 802B, 803B, 805B, 810B, 811B, 812B, 813B, 815B, 401-701B-801B, 400-402-405-420-700B-702B-705B-800B-802B-805B, 401-403-701B-703B-801B-803B, 411-711B-811B, 410-412-415-425-710B-712B-715B-810B-812B-815B, 411-413-711B-713B-811B-813B Shop Manual

Scan or click anywhere

youfixthis.com

Click anywhere on this page to get the full manual