856 XL WORKSHOP MANUAL



PREVIEW BY YOUFIXTHIS.COM

www.youfixthis.com

Download full manual at youfixthis.com

Table of Contents

This Manual covers the following major sections:

		Page
1.	INTRODUCTION	4
2.	SERVICE DIAGNOSIS	6
3.	SPECIFICATIONS	12
4.	LONGITUDINAL AND CROSS SECTION	16
5.	VALVE LEVER ASSY	18
6.	CAMSHAFT AND IDLER GEAR	21
7.	CYLINDER HEAD VALVES AND VALVE GUIDES	27
8.	MANIFOLDS	39
9.	FAN – V-BELTS	40
10.	CRANKSHAFT PULLEY AND VIBRATION DAMPER	41
11.	CRANKCASE FRONT COVER AND PLATE	43
12.	CRANKCASE	45
13.	CRANKSHAFT	49
14.	PISTONS CYLINDER SLEEVES – CONNECTING RODS	63
15.	BALANCER (4-cyl. only)	72
16.	FLYWHEEL	77
17.	LUBRICATING SYSTEM	80
18.	OIL PUMP	81
19.	WATER PUMP	86
20.	THERMOSTAT AND COOLANT MANIFOLD	89
21.	INJECTION PUMP EP/VA–VE	91
22.	INJECTION NOZZLE HOLDER	96
23.	TIMING GEAR TRAIN	97
24.	VALVE LASH ADJUSTMENT	99
25.	ENGINE TESTING	101

PREVIEW - YOUFIXTHIS.COM

YouFixThis.com
Download full manual at youfixthis.com

Maintenance

Inspect the generator after every six months of operation to ensure long life.

The commutator should be smooth and polished with even colouring and there should be no signs of solder thrown from the commutator connections.

Brushes must be polished over the whole face, be free in their boxes and should be checked for wear. If badly, worn, replace them with new ones.

Check brush spring pressure with the fingers to see if they appear adequate.

All parts should be free from dust and all connections be clean and tight.

Testing in Position to Locate a Fault

Before proceeding to test the generator check:

That the drive belt is serviceable and that the tension is correct.

That the generator is correctly connected to the regulator and that the ground connections is correct. See Illust. 2.

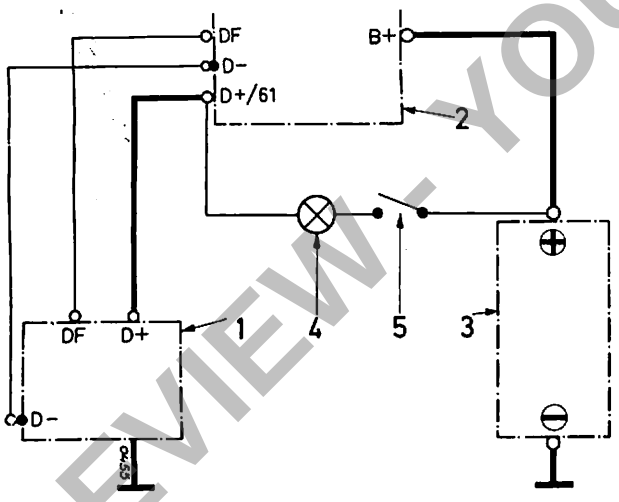

Illust. 2

1 — Generator
2 — Voltage regulator
3 — Storage battery
4 — Charge control lamp
5 — Light switch

Checking the Generator

Switch off all lights and accessories, then disconnect the cables from the generator and link the two generator terminals with a length of wire.

Connect the plus lead of a voltmeter (0 — 20 volts range) to the linked generator terminals and the other lead to a good earth on the generator body.

Start the engine and gradually increase the engine speed. The voltmeter reading should rise without fluctuation.

Warning: Do not allow the voltmeter reading to reach 20 volts.

Do not race the engine in an attempt to increase the voltage. It is sufficient to run the engine up to 800 — 1000 rpm. Carry out this test as brief as possible to avoid damage to the field coils.

If there is no reading, check the brush wear.

If there is a low reading of approximately 1/2 — 1 volt, the field winding may be at fault.

If there is a reading of approximately half the normal voltage, the armature winding may be at fault.

Note: Excessive sparking at the commutator in the above test indicates a defective armature which should be replaced. Sparking can be seen when cover band (18) Illust. 1 is removed.

Slacken the driving belt and check the bearings for free-running by spinning the pulley by hand. If the armature fails to spin freely, with the brushes raised from the commutator, the generator should be disassembled and the bearings examined.

If the generator is in good order, remove the link wire and restore the original connections, then proceed to test the regulator.

Checking the Regulator

Note: Test must be made after the generator has completed a run of several hours. If the engine has been shut down after a run, operating temperatur may be re-established by operating the regulator at normal to full load for a period equal to the down time (up to 30 minutes).

Testing the Switch (Return Current Switch)

1. Cut-in voltage

   Disconnect the cable from regulator teminal B+ and make sure the bared end of the loose cable will not contact any of the metal parts.

   Connect a test lamp 12V across terminal B+ and earth.

   Connect a voltmeter to generator terminal D+ and earth.

   Start the engine and observe the voltmeter.

   With rising engine speed the test lamp must light up.

PREVIEW - YOUFIXTHIS.COM
YouFixThis.com
Download full manual at youfixthis.com

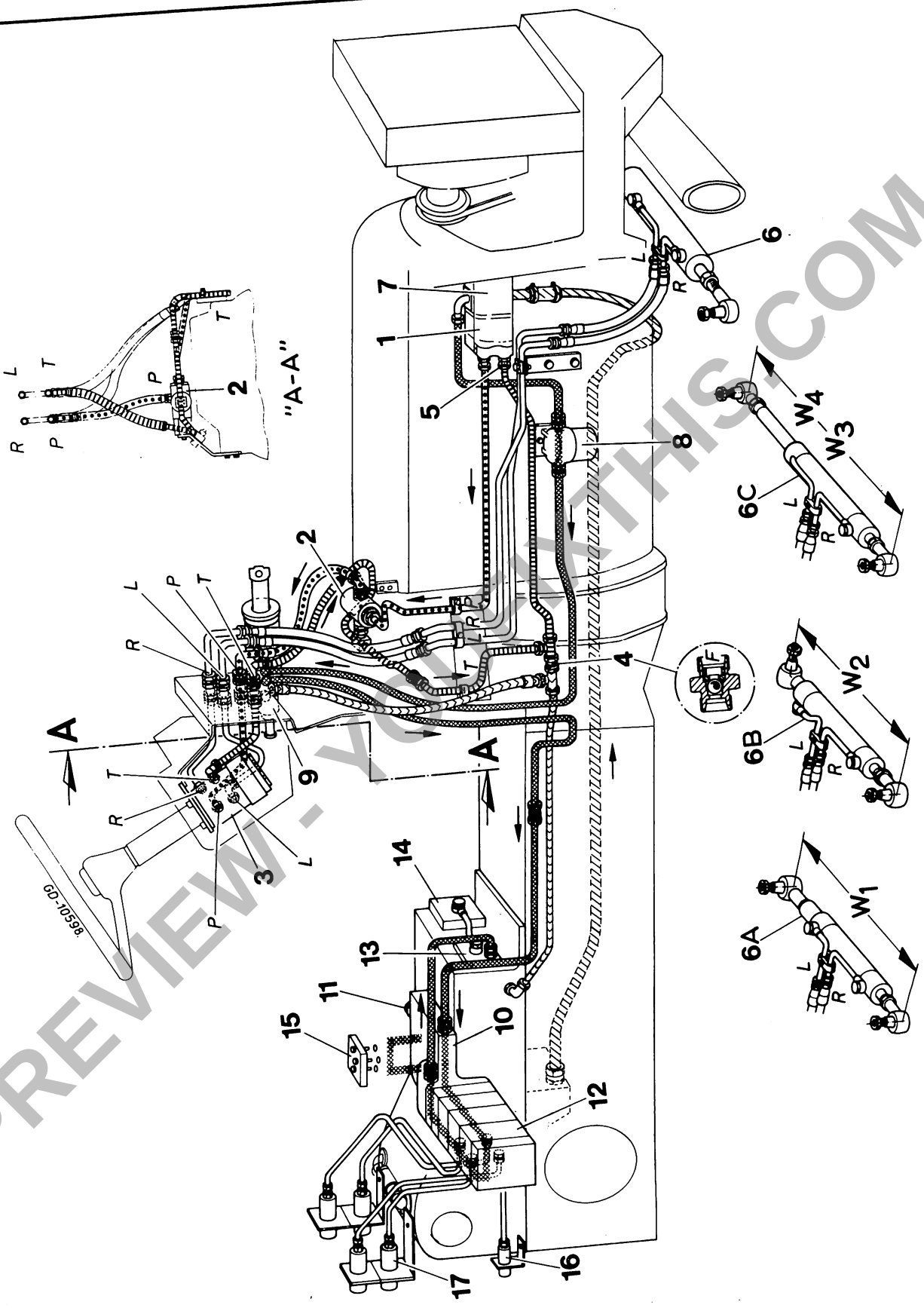

Illust. 73

PREVIEW - YOUFIXTHIS.COM

Longitudinal Section of Engine

1 – Oil pump
2 – Idler gear (Oil pump)
3 – Crankshaft oil seal, front
4 – Crankshaft
5 – Crankshaft pinion
6 – Idler gear
7 – Camshaft
8 – Camshaft gear
9 – Water pump
10 – Valve seat insert
11 – Exhaust valve
12 – Coolant jet for injection nozzle
13 – Valve lever shaft
14 – Exhaust valve lever
15 – Intake valve lever
16 – Intake valve
17 – Valve stem guide
18 – Turbocharger
19 – Injection nozzle holder
20 – Flywheel and crankshaft oil seal, torque converter version
21 – Main bearing, rear
22 – Main bearing
23 – Balance weight
24 – Balance weight bolts
25 – Fuel feed pump drive
26 – Oil suction screen
27 – Flywheel and crankshaft oil seal, early torque converter version
28 – Flywheel housing
29 – Flywheel and crankshaft oil seal, dry type disk clutch version

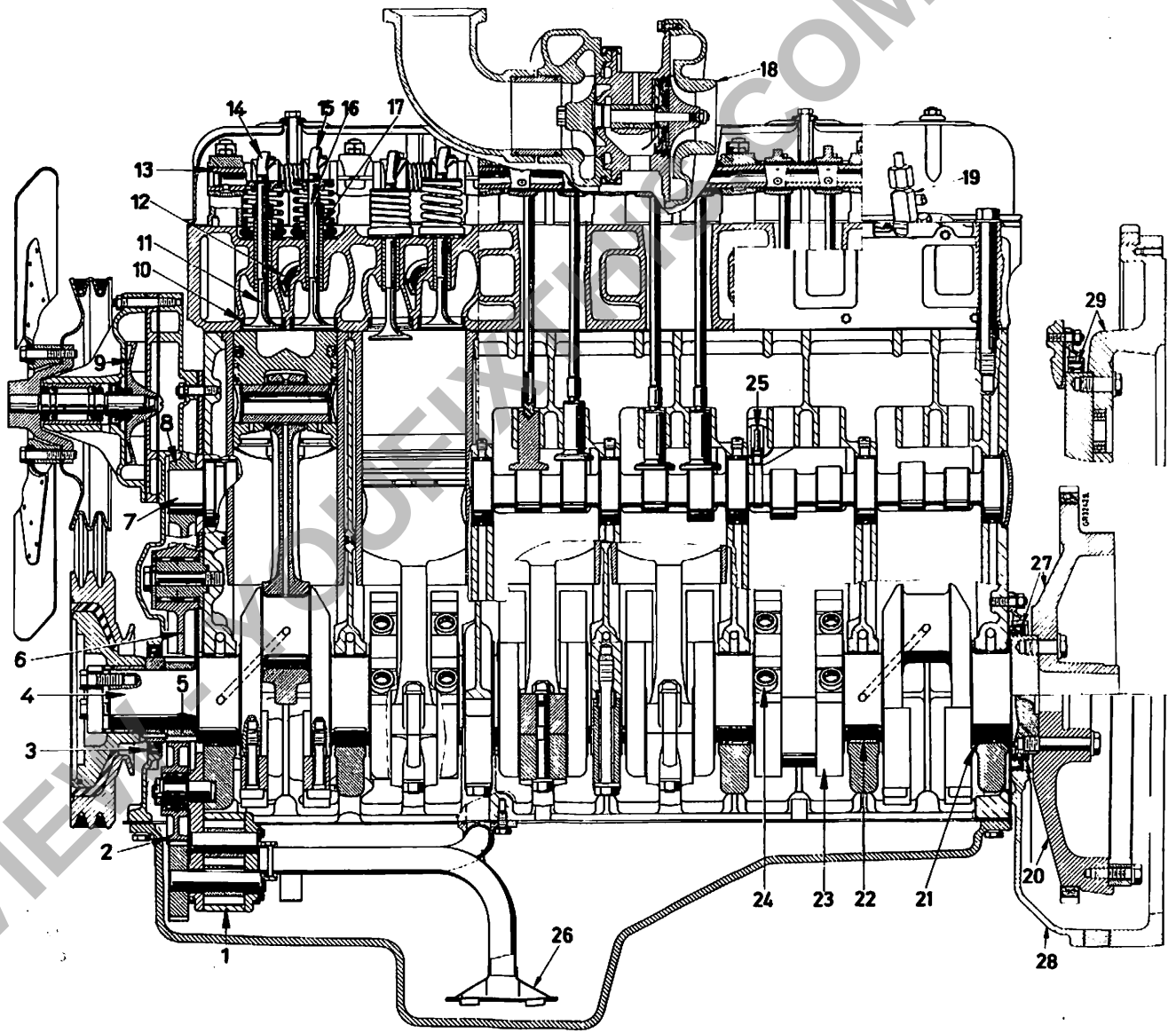

Illust. 3
Typical DT-358 engine

PREVIEW ONLY YOUFIXTHIS.COM
YouFixThis.com
Download full manual at youfixthis.com

Special Nut and Bolt Torque Data

		daNm			Lbf-ft		
		1st step	2nd step	final step	1st step	2nd step	final step
*	Balance weight necked-down bolts (obsolete)	3	–	5.5 ÷ 6.0	21.7	–	40 ÷ 43.5
*	Balance weight pitch diameter bolts	6	–	10.0 ÷ 10.5	44	–	72.3 ÷ 76
*	Main bearing cap necked down bolts (obsolete) 10.9	4	8	10.5 ÷ 11.5	29	58	76 ÷ 83
*	Main bearing cap necked down bolts (obsolete) 12.9	4	8	13 ÷ 14	29	58	94 ÷ 101
*	Main bearing cap pitch diameter bolts 12.9	4	8	19 ÷ 20	29	58	137.5 ÷ 145
*	Main bearing cap pitch diameter bolts 10.9	4	8	14 ÷ 15	29	58	101 ÷ 109
*	Connecting rod nuts "Angle" tightening procedure, refer to Illust. 144						
*	Annular spring tightener element or clamping ring	3	6	6 ÷ 6.5	21.7	43.5	43.5 ÷ 47
*	Capscrew-clamping ring front pto	1.5	2.7	3.0	10.8	19.5	22
**	Idler gear necked down bolt (obsolete)	–	–	9 ÷ 9.5	–	–	65 ÷ 69
**	Idler gear pitch diameter bolt	–	–	10 ÷ 10.5	–	–	72 ÷ 76
*	Flywheel bolts	4	8	14 ÷ 15	30	60	103 ÷ 110
	Bolts, seal ring retainer, rear	1.5	–	1.8 ÷ 2	10.8	–	13 ÷ 14.5
*	Cylinder-head nuts (obsolete)	4	8	11.5 ÷ 12.5	29	58	83 ÷ 90
*	Cylinder-head studs (obsolete)	–	–	5 ÷ 6	–	–	36 ÷ 44
*	Cylinder-head cap screws with round washer (obsolete)	4	8	11 ÷ 12	29	58	80 ÷ 87
*	Cylinder-head cap screws with collar	4	8	14 ÷ 15	29	58	101 ÷ 109
	Valve lever bracket studs	–	–	3.5 ÷ 4	–	–	25 ÷ 29
*	Valve lever bracket stud nuts	–	–	6 ÷ 7	–	–	44 ÷ 51
	Valve lever bracket clamping screw	–	–	1 ÷ 1.2	–	–	7 ÷ 8.6
	Side cover screws	–	–	1.6 ÷ 1.8	–	–	12 ÷ 13
	Oil pressure gauge			max. 1			max. 7.2
	Temperature sender unit			max. 2			max. 14.5
	Exhaust manifold stud nuts	–	–	3.5 ÷ 4.0	–	–	26 ÷ 30
	Nozzle holder stud)	–	–	1.3 ÷ 1.8	–	–	9.4 ÷ 13
	Nozzle holder stud nuts) flange mounted	0.5	–	1 ÷ 1.2	3.6	–	7.2 ÷ 8.7
	Nozzle union nut) nozzle holder	–	–	6 ÷ 8	–	–	44 ÷ 58
*	Bolt) crab mounted	–	–	2.3 ÷ 2.7	–	–	16.6 ÷ 19.5
	Nozzle union nut) nozzle holder	–	–	5 ÷ 7	–	–	36.2 ÷ 50.7
	Nozzle holder leak oil connection hollow screw	–	–	0.2 ÷ 0.8	–	–	1.5 ÷ 5.8
	Injection line union nuts	–	–	2 ÷ 2.5	–	–	15 ÷ 18
	Valve cover adapter stud	–	–	1.6 ÷ 1.8	–	–	11.6 ÷ 13
	Valve cover stud nut	–	–	0.5 ÷ 0.7	–	–	3.6 ÷ 5
	Valve cover screws (sheet metal)	–	–	0.5 ÷ 0.7	–	–	3.6 ÷ 5
	Valve cover screws (gray iron)	–	–	1.5 ÷ 1.7	–	–	11 ÷ 12.3
	Oil pan drain plug (when asbesto-filled packing ring is used)	–	–	5 ÷ 6	–	–	36 ÷ 43
	Oil pan drain plug (when copper ring is used)	–	–	13.8 ÷ 15	–	–	100 ÷ 118
	Plug with socket head (oil gallery-crankcase)	–	–	max. 1.2	–	–	max. 8.7
	Injection pump gear bolt (3 radial lines)	1.5	–	2.2 ÷ 2.5	11	–	16 ÷ 18
	Injection pump gear bolt (6 radial lines)	1.5	–	2.5 ÷ 2.8	11	–	19 ÷ 21
	Injection pump cover bolt (tighten crosswise)	0.4	–	0.8 ÷ 1	3	–	5.8 ÷ 7.2
	Injection pump flange nut	1.5	–	2.2 ÷ 2.5	11	–	16 ÷ 18
	Injection pump plunger end plug (AF 17)	–	–	4.5 ÷ 5.5	–	–	33 ÷ 40
	Injection pump plunger end plug (AF 12)	–	–	1.4 ÷ 2.0	–	–	10 ÷ 15
	Injection pump drive shaft nut M 12 (AF 19)	–	–	6 ÷ 7	–	–	44 ÷ 50
	Injection pump drive shaft nut M 14 (AF 22)	–	–	8.5 ÷ 10	–	–	63 ÷ 72
	Hollow screws	–	–	2 ÷ 2.5	–	–	15 ÷ 18
	Bolts, sheet metal oil pan	–	–	1.2 ÷ 1.4	–	–	8.7 ÷ 10
	Engine breather screw	–	–	0.8 ÷ 1.0	–	–	5.8 ÷ 7.2
	Valve set screw clamping torque	–	–	1.7 ÷ 4.5	–	–	12.3 ÷ 32.6
	Exhaust manifold, coolant filter mounting stud	–	–	3.5 ÷ 4.0	–	–	26 ÷ 29
	VE Injection pump support angle mounting bolt M 6	–	–	0.7 ÷ 0.9	–	–	5.2 ÷ 6.6

* Oiled

** Use liquid locking compound while mounting

PREVIEW - YOUFIXTHIS.COM
YouFixThis.com
Download full manual at youfixthis.com

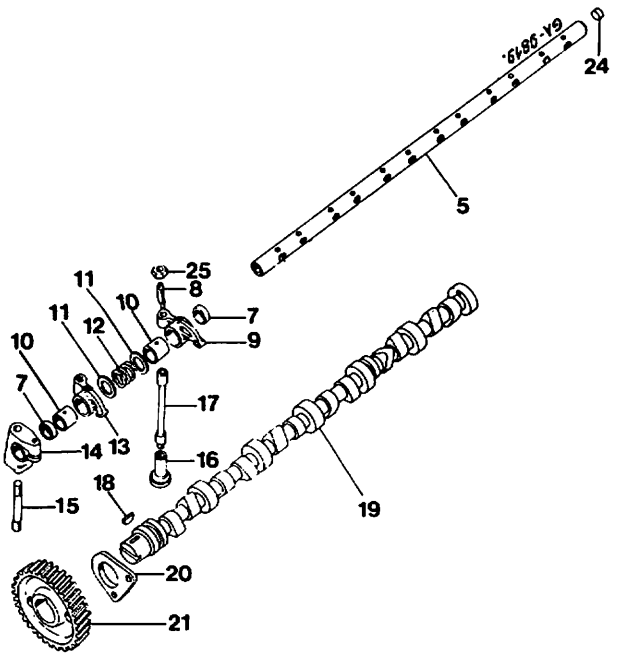

Illust. 5

General

The valve lever assembly receives its lubrication through the hollow valve lever shaft. Oil holes are provided in the valve lever shaft (5) Illust. 5 to lubricate individual valve levers.

An oil port is provided in the shaft which must line up with the respective oil-way in the bracket. The mark (3) Illust. 8 must be in line with the clamping slot of the front bracket. Replaceable oil plugs (24) Illust. 5 are used to close up both ends of the shaft.

Valve levers for intake and exhaust valves differ in length but are provided with the same replaceable bushings which must be reamed to size after installation.

Replacement levers are supplied with bushings in place.

Specifications

(refer to Illust. 5)

Valve Lever and Shaft

Valve lever shaft diameter, mm (inch) 21.56-21.59 (0.849-0.850)

Valve lever clearance on shaft, mm (inch) 0.023-0.064 (0.0009-0.0025)

Valve lever bushing reamed to size (inner diameter), mm (inch) 21.62-21.64 (0.851-0.852)

Valve Lever Springs

Free length, mm (inch) 37.7 (1.48)
Test length, mm (inch) 25.0 (1.00)
Test load, N (lbf) 29 (6.6)

Removal and Disassembly

Thoroughly clean the engine externally.

Remove valve housing cover.

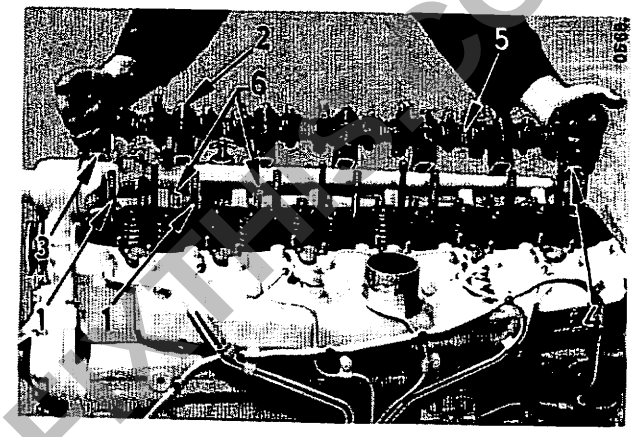

Illust. 6

1 – Studs
2 – Clamping bolts
3 – Valve lever shaft bracket, front
4 – Valve lever shaft bracket, rear
5 – Pressure spring
6 – Valve push rod

Remove nuts from studs (1) Illust. 6 and lift the complete valve lever assembly clear of the cylinder head. Loosen clamping bolts (2) and press in brackets slightly towards the center, taking care that they do not slide off the shaft, resulting in levers and springs etc. being scattered all over the floor. Slide all parts off the shaft and place them on a table in removal order to facilitate correct reassembly.

Cleaning, Inspection, and Repair

Clean all parts in kerosene or Diesel fuel and blow dry with compressed air. Be sure all oil passages are free from sludge and sediment.

Check valve lever shaft, lever bushings, thrust washers, and spacer rings. Check bushings and valve lever shaft for scoring and out-of-round wear and replace, if necessary. Use a suitable drift punch and press plate and drive bushings out of valve levers.

Install new bushings. The new bushing must be flush with the two side faces (5) Illust. 7. Use a 3 mm = 1/8" drill to open the oil passage (4) in the bushing and remove chips and burrs. Ream the bushing to size, see "Specifications".

PREVIEW - YOUFIXTHIS.COM

YouFixThis.com

Download full manual at youfixthis.com

Probable Cause	Remedy
Engine Fails to Turn	
1. Batteries too low to turn engine	Charge batteries or install new ones.
2. Starting switch inoperative	Inspect for faulty cables and terminals. Replace starting switch if necessary.
3. Cranking motor inoperative	Refer to Service Manual "Electrical Equipment".
4. Engine oil too heavy	Use correct grade of lubricating oil.
5. Internal seizure	Hand crank the engine. If the engine does not turn easily, seizure due to internal damage; including gear train, pistons, sleeves, connecting rods or main bearings, is indicated.
6. Hydrostatic lock	Remove all the injection nozzles and crank the engine. Check for fuel or coolant in the cylinder.
Engine Does Not Develop Full Power	
1. Low or no fuel pressure	
a. Insufficient fuel	Check fuel tank.
b. Fuel oil filter clogged	Disassemble and clean each unit.
c. Fuel filter gaskets defective (air being drawn into fuel)	Replace gaskets.
d. Moisture in fuel tank	Drain entire system including water trap and filter. Refill with clean fuel, and vent the air from the system.
2. Poor fuel	Use good grade of fuel.
3. Air cleaner clogged	Remove and service air cleaner as described in operator's manual.
4. Injection pump not properly timed to the engine	Check timing. (Refer to Section "INJECTION PUMP.")
5. Injection pump not operating properly	Remove injection pump and test it. Refer to Service Manual "Fuel System and Turbocharger" for test specifications.
6. One or more fuel injection nozzles not operating properly	Replace the injection nozzles.
7. Loose or broken fuel lines or fittings between injection pump and injection nozzles	Tighten or repair.
8. Loose or broken connections or leaking gaskets at intake manifold or exhaust manifold	Tighten or repair.
9. Improper valve settings	Reset as necessary. If out of adjustment an excessive amount, check for bent push rods.
10. If equipped with ether priming system with butterfly valve, check the valve position	Correct.
11. *Lack of compression*	Refer to "Poor Compression".

PREVIEW - YOUFIXTHIS.COM

YouFixThis.com
Download full manual at youfixthis.com

General

This Service *Manual covers* the basic engine of all Neuss build direct injection engine versions, both naturally aspirated and turbocharged.

Together with the manuals

– "Electrical Equipment" No. 1091 630 R2

and

– "Fuel System and Turbocharger" No. 1 091 627 R2 (to be issued at a later date)

this manual gives complete service information for the above engine series and replaces instructions given in previous publications.

IH – Diagnostic Center

The engine is provided with adaptors for the „Diagnostic Center". We recommend therefore, that all tests be performed with the "IH – Diagnostic Center".

SI – Measurements

A standard of measurement known as International System of Units (SI) has been adopted for world-wide use. These units are used throughout this manual.

SI Unit	English Equivalent
mm – millimeter	0.039 inches
cm – centimeter	0.39 inches
cm^3 – cubic centimeter	0.06 cubic inches
m^3 – cubic meter	35.31 cubic feet
l – liter	1.057 quarts
kg – kilogram	2.205 pounds weight
kPa – kilopascal	0.145 psi
MPa – Megapascal	145 psi
N – Newton	0.225 pounds force
daN – dekanewton	2.25 pounds force
Nm – Newton meter	0.738 foot pounds force
daNm – dekanewton meter	7.38 foot pounds force
°C degrees – Celsius	°Fahrenheit = 1.8 x °C + 32
kW – kilowatt	1.34 horepower
l/min – liter/minute	0.219 gallons per minute
km/h – kilometer / hour	0.621 miles per hour
1/min	rpm

PREVIEW - YOUFIXTHIS.COM

YouFixThis.com
Download full manual at youfixthis.com

	bar
Steering pressure	100 + 10
Pilot pressure	Min. 11.5 Max. 17
Main relief valve brake pressure	170 + 10

	Kg.
Maximum lift on lower links	
Highest position	3280
Horizontal position	2842
Lowest position	2153
With auxiliary lift cylinder	
Highest position	4175
Horizontal position	3670
Lowest position	2769

Hydraulic fluid	Type	Quantity
	IH Hy-Tran to - IH Spec.B6 or IH Hydaulic oil	Basic 18 litres with additional reservoir 46 litres

SPECIAL TORQUES

Hydraulic pump mounting bolts	4.5 da Nm.

PREVIEW - YOUFIXTHIS.COM

YouFixThis.com
Download full manual at youfixthis.com

2. Connecting rods are not numbered. However, it is recommended to mark these accordingly so that they can be reassembled to their original positions. On DT-402 engines bearing cap of connecting rod No. 1 is marked with figure 1.

3. Also main bearing and connecting rod bearing inserts are without any markings. On removal carefully store them so they can be reassembled to their original positions when reused.

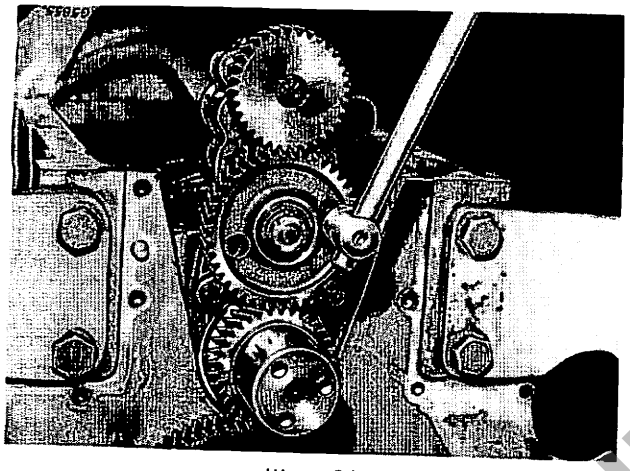

Illust. 91
Removing or installing oil pump

The oil pump may be removed as illustrated or as a unit with main bearing cap No. one.

6-cyl.-engines:

To remove the crankshaft, pistons must be taken out of their sleeves individually towards the cylinder head side. As soon as a pair of connecting rod caps, Illust. 90 is lifted off, turn the crankshaft until respective pistons can be pushed out of their sleeves.

3 and 4-cyl.-engines:

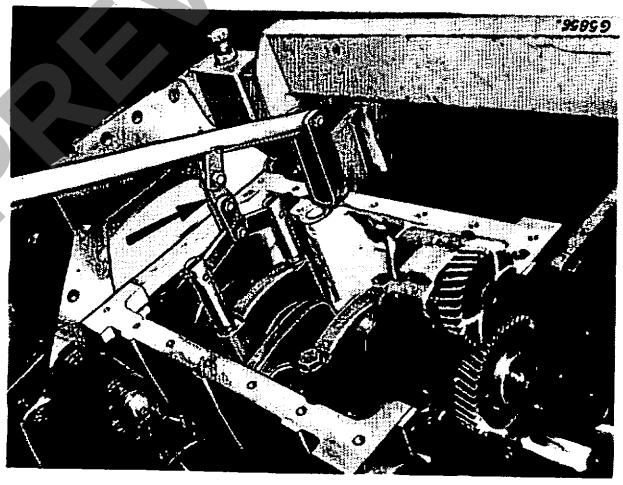

Illust. 92
Removing main bearing caps

To remove the crankshaft only the connecting rod bearing caps must be removed.

Remove bearing cap bolts and use a locally made lever tool (Illust. 92) to lift out bearing caps.

Note: Two full length straight pins enter the bearing cap. The clamping effect resulting from the lever arrangement will grip the cap for removal.

Remove the crankshaft taking care not to damage machined areas by the lifting tackle.

Cleaning, Inspection and Repair

Clean all parts thoroughly with kerosene or Diesel fuel. Blow through oilways with compressed air.

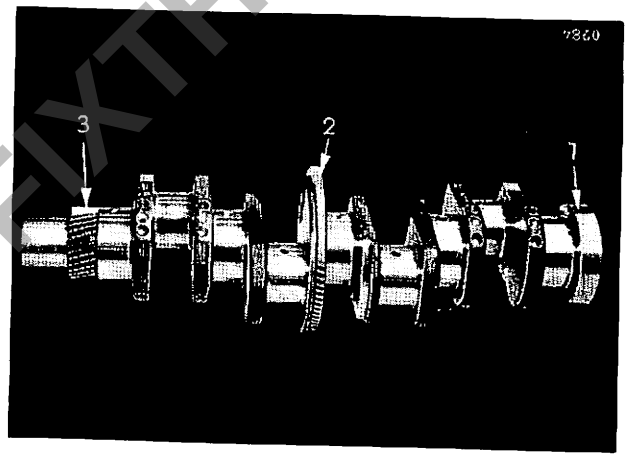

Illust. 93
Crankshaft (4-cyl.-engines)

1 – Sealing face
2 – Balancer drive gear
3 – Crankshaft pinion

Journals and Crankpins

Check the crankshaft for wear on journals and crankpins. Due to intermittent load characteristics of engine operation wear becomes usually apparent as out-of-round wear. Measure at right angles, see "A" and "B" Illust. 94.

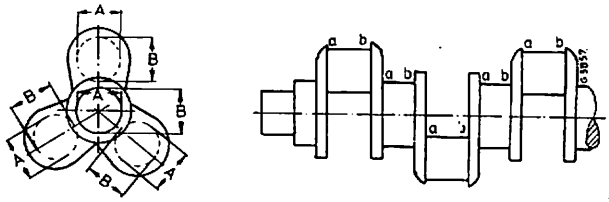

Illust. 94
Measurung points, crankshaft

PREVIEW - YOUFIXTHIS.COM

YouFixThis.com
Download full manual at youfixthis.com

TABLE OF CONTENTS

This Manual covers the following sections:

Page:

1. INJECTION PUMP, MODEL "VA ... CR ..."

— **General Description and Operation** 1-1

— **Checks and Adjustments:**
A — Pump on Engine 1-7
B — Pump on Flow Bench 1-9
C — Maximum Fuel Delivery 1-9

— **Pump Overhaul**
Service Tools Required 1-13
Removal and Disassembly 1-16
Cleaning, Inspection and Repair 1-22
Reassembly and Adjustment 1-22
Installation 1-29

2. INJECTION PUMP, MODEL "VE ... F ..."

— **General Description and Operation**
Designation Code 2-1
Principle of Operation 2-3

— **Pump Overhaul**
Abbreviations 2-10
Test Equipment and Special Tools Required 2-10
Locally Made Service Tools 2-10
Special Torques 2-11
Disassembly 2-12
Inspection 2-16
Reassembly and Adjustment 2-17

— **Servicing the Aneroid**
Disassembly 2-28
Inspection 2-30
Reassembly and Adjustment 2-30

— **Checks and Adjustment**
Preparation 2-34
Adjusting 2-35
Testing and Adjusting Fuel Injection fitted with Aneroid 2-38

— **Testing Pump on Engine**
Fuel Supply Pressure 2-41
Charging Pump Pressure 2-41
Automatic Timing Device 2-41

3. INJECTION NOZZLES

— **Flange Mounted** 3-1

— **Crab Mounted** 3-5

PREVIEW - YOUFIXTHIS.COM

YouFixThis.com

Download full manual at youfixthis.com

Switch on the test bench and adjust fuel supply pressure to 20 kPa.

Position the plunger in bottom dead center and zero the dial indicator (fuel is flowing out of pipe (6)).

Slowly turn the test bench drive clockwise (viewed from pump drive end) until fuel outflow (6) is reduced to a mere trickle.

This is the point of port closure, i.e. injection begin.

Record the dial indicator reading at this point.

Compare the recorded figure with the spcified "PL" as listed in the Testing and Adjustment Chart.

If the recorded figure exceeds the specified "PL" dimension, place a thicker shim (52) under the plunger foot and vice versa.

In case the actual shim thickness required lies between two available shims of the assortment, use the thicker shim to correct plunger lift to port closure.

Recheck injection pump timing.

Setting the Timing Pointer

With plunger dimension "PD" or plunger lift to port closure "PL" correct, adjust the timing pointer.

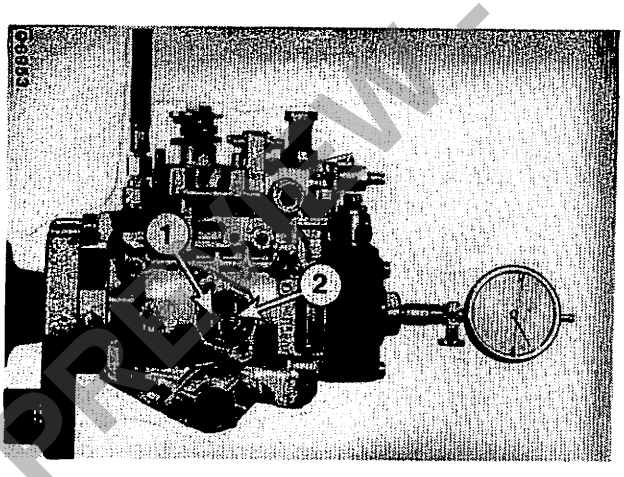

Illust. 57

1 – Timing pointer
2 – Scribe line on the face cam

Install a dial indicator in place of the plunger end plug. Illust. 57.

With the plunger in bottom dead center, pre-load the dial indicator to about 4 mm and zero the dial.

Turn the pump drive shaft clockwise (viewed from drive end) until the plunger travels (lifts) 1 mm.

At this point align pointer (1) with the scribe line (2) and lock the pointer retainer screw.

The keyway in the drive shaft must be up (in 11 o'clock position) when setting the pointer.

To complete the pump proceed as follows:

Remove dial indicator or pre-stroke measuring device.

Remove the hydraulic head, auxiliary spring (if used) and selected shim (52).

Remove the temporarily installed parts, as pump housing cover, governor shaft (108), dog-point screws (104), and plug M12 x 1.5.

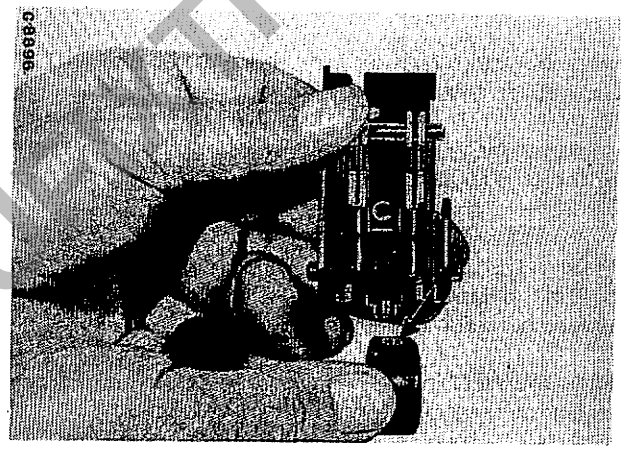

Illust. 58

Be sure the ball joint on the governor lever assy. slides freely in the bore in the metering sleeve, Illust. 58.

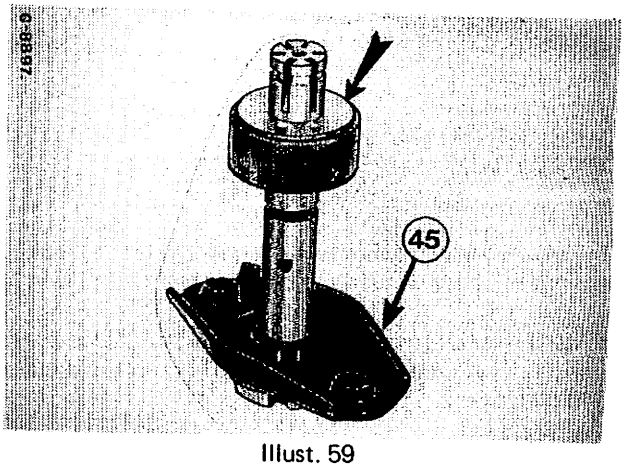

Illust. 59

Place shim (43), slotted thrust washer (44), and spring (45) on the plunger foot respectively.

YouFixThis.com
Download full manual at youfixthis.com

Engine: D–155 *Application: 503 Machine Serial No. 251818 and up*

Injection Pump: EP/VA3/100H 1200 CR 9-6 (3 228 769 R91)

Pump speed		1/2 engine speed
Engine speed:		
low idle	1/min	650 – 750
high idle	1/min	2525 – 2585
rated load	1/min	2400
minimum overload	1/min	1600
Rated power at rated load speed	kW	32
Max. torque at minimum overload speed	daNm	14.3
Torque rise	%	12 ± 4
Static timing – engine	degrees BTDC	10
Start to advance – engine speed	1/min	400
Total advance – engine	degrees BTDC	
Pump advance at minimum overload speed	mm	4
Full pump advance at rated load speed	mm	$5^{+0.4}_{-0.3}$
Charging pump pressure at:		
low idle	kPa	250
minimum overload speed	kPa	430
rated load speed	kPa	590
Max. permissible vacuum at inlet side of pump	kPa	– 20
Fuel rator specifications:		
Fuel consumption at:		
rated load speed	kg/h	8.2
time	s/l	366
100/min below rated speed	kg/h	7.8
time	s/l	385
minimum overload speed	kg/h	5.7
time	s/l	527
Turbocharger, boost pressure at rated speed	kPa	

Engine power, fuel consumption and charging pump pressure ± 3 %

PREVIEW - YOUFIXTHIS.COM

YouFixThis.com
Download full manual at youfixthis.com

Fuel Rator Test Specifications

Engine: D–239 *Application: H–30 B, H–30 B NICO–8A*

Injection Pump "Bosch" EP/VA4/100H 1100 CR 12-3 (3 144 292 R91)

Pump speed	1/2 engine speed
Low idle speed – engine	650 – 750
High idle speed – engine	max. 2430
Rated load speed – engine	2200
Minimum overload speed – engine	1600
Max. torque daNm (ft.lbs) at 1600 engine rpm	23.67 (171.5)
Rated kW (HP) at engine rated load speed	49.4 (66.3)

Timing Advance

Static timing – engine, degrees BTDC	16
Total advance – engine, degrees BTDC	26.6
Start to advance – engine rpm	890
Pump advance at minimum overload engine speed (travel of advance piston) mm (inch)	3.6 (.142)
Full pump advance (travel of advance piston) mm (inch)	4.8 (.189)

Charging Pump Pressure, at:

Low idle, MPa (PSI)	0.35 – 0.38 (50 – 55)
Minimum overload speed, MPa (PSI)	0.52 – 0.56 (75 – 81)
Rated load speed, MPa (PSI)	0.62 – 0.69 (89 – 99)
Max. permissible vacuum at inlet side of pump kPa (PSI)	20 (2.9)

Fuel Rator Specifications

Maximum fuel at rated load speed kg/h (lbs/hr)	12.38 (27.3)
Minimum time sec/1000 ccm (sec/qt) *	243 (230)
Fuel at 2100 rpm engine speed kg/h (lbs/hr)	11.34 (25.0)
Minimum time sec/1000 ccm (sec/qt) *	267 (253)
Fuel at minimum overload speed kg/h (lbs/hr)	9.16 (20.2)
Minimum time sec/1000 ccm (sec/qt) *	329 (312)
Fuel temperature at overflow line °C (°F)	40 – 45 (104 – 113)

* US qt

Engine power, fuel consumption and charging pump pressure ± 3 %

PREVIEW - YOUFIXTHIS.COM

YouFixThis.com
Download full manual at youfixthis.com

Flow Bench Test Specifications

Engine: D–310 *Application: 715*			*Rated Speed: 2400 RPM*	
Injection Pump	IHC–No.		Bosch–No.	
	3 218 337 R91		EP/VA6/100H 1200 CR 191	
Correction of Control Specifications acc. to "Bosch" Test Instruction VDT–WPP 161/4 or Pre-Adjusting Dimensions see "Bosch" Repair Manual VDT–WIP 161/4				
Plunger Lift to Port Closure	0.4 ± 0.02 mm (± 0.04)			
Static Timing	Alignment of the Pointer at 1 mm Plunger Stroke (ref. to Outlet 'A')			
1. Control Specifications	RPM		Delivery Difference cu.cm./1000 Strokes	
1.1 Injection Advance	800	3.2–4.2 mm		
1.2 Charging Pump Pressure	800	0.52–0.57 MPa (75–83 PSI)		
1.3 Full Load Delivery	800	60 – 61 $\frac{\text{cu.cm.}}{\text{1000 Strokes}}$	2.5	
1.4 Idler-Governor Run-Out	450	14 – 20 "	3	
1.5 Start	100	min. 70 "	Opening P. 20 MPa (2840 PSI)	
1.6 End-Governor Run-Out	1255	25 – 33 "		
2. Check Data and in Brackets (Re-check Data)				
2.1 Injection Advance	RPM	400–550 (370–580)	800	850-1000 (820-1030)
	mm	Begin	(2.9–4.5)	End (4.5–5.2)
2.2 Charging Pump Pressure	RPM	200	800	1200
	MPa	0.22–0.27 (0.2–0.29)	(0.495–0.585)	0.635-0.685(0.62-0.7)
	PSI	32–39 (29–42)	(72–85)	92–99 (90–102)
2.3 Feed Quantity				
Speed Lever End-Position	Feed Lever Full	RPM	cu.cm./1000 Strokes	Overflow Quantity cu.cm./10 sec.
		$\frac{\text{1265 – 1315}}{\text{(1250 – 1330)}}$	10	
		1255	(24–34)	
		1140	58–61 (57.5–61.5)	
		800	(59.5–61.5)	
		500	61–65 (60–66)	
		1000	–	55–100 (40–110)
		500	–	55–100 (40–110)
	Stop	1200	0	
Idling Position	Full	$\frac{\text{540 – 590}}{\text{(520 – 610)}}$	0	
		450	(12–22)	
	Start	100	min. 70	Opening Pressure 20 MPa
		260 (250)	min. 70	
		400 (420)	max. 66	

1: Shim thickness under advance piston spring mm

2: Pre-load length of governor spring 24.65 mm

PREVIEW - YOUFIXTHIS.COM

YouFixThis.com Download full manual at youfixthis.com

Fuel Rator Test Specifications

Engine: D–358 *Application: 520A, 866 (Australia), 866 (Mexico), H-60B, 515B*

Injection Pump "Bosch" EP/VA6/100H 1250 CR82 (3 144 107 R91)

Pump speed	1/2 engine speed
Low idle speed – engine	650 – 750
High idle speed – engine	2700 – 2760
Rated load speed – engine	2500
Minimum overload speed – engine	1600
Max. torque daNm (ft.lbs) at 1600 engine rpm	36.5
Rated kW (HP) at engine rated load speed	83.8 (11)

Timing Advance

Static timing – engine, degrees BTDC	16
Total advance – engine, degrees BTDC	28.1
Start to advance – engine rpm	600
Pump advance at minimum overlaod engine speed (travel of advance piston) mm (inch)	3.3 (.13)
Full pump advance (travel of advance piston) mm (inch)	5.5 (.22)
Plunger lift to port closure mm (inch)	0.3 ± 0.02 (.012 ± .0008)

Charging Pump Pressure, at:

Low idle, MPa (PSI)	0.30 (43.5)
Minimum overload speed, MPa (PSI)	0.48 (69.6)
Rated load speed, MPa (PSI)	0.63 (91.3)
Max. permissible vacuum at inlet side of pump kPa (PSI)	20 (2.9)

Fuel Rator Specifications

Maximum fuel at rated load speed kg/h (lbs/hr)	21.6 (47.20) ± 3%
Minimum time sec/1000 ccm (sec/qt) *	137.0 (130) ± 3%
Fuel at 2400 rpm engine speed kg/h (lbs/hr)	20.8 (45.86) ± 3%
Minimum time sec/1000 ccm (sec/qt)	142.5 (134) ± 3%
Fuel at minimum overload speed kg/h (lbs/hr)	16.1 (35.50) ± 4%
Minimum time sec/1000 ccm (sec/qt)	185.0 (175) ± 4%
Fuel temperature at overflow line °C (°F)	50 – 55 (122 – 131)

* US qt

(EGD 1021)

Engine power, fuel consumption and charging pump pressure ± 3 %

PREVIEW - YOUFIXTHIS.COM
YouFixThis.com
Download full manual at youfixthis.com

Engine: DT–402 Application: 953 Hydro

Injection Pump: VE6/12F 1250 R 23 (3 218 440 R91)

Pump speed		1/2 engine speed
Engine speed:		
low idle	1/min	850 – 950
high idle	1/min	2640 ± 30
rated load	1/min	2500
minimum overload	1/min	1800
Rated power at rated load speed	kW	123.8
Max. torque at minimum overload speed	daNm	59
Torque rise	%	
Static timing – engine	degrees BTDC	16
Start to advance – engine speed	1/min	980
Total advance – engine	degrees BTDC	28
Pump advance at minimum overload speed	mm	3.2
Full pump advance at rated load speed	mm	4.9
Charging pump pressure at:		
low idle	kPa	370
minimum overload speed	kPa	500
rated load speed	kPa	620
Max. permissible vacuum at inlet side of pump	kPa	– 29
Fuel rator specifications:		
Fuel consumption at:		
rated load speed	kg/h	30.1
time	s/l	99.3
100/min below rated speed	kg/h	28.9
time	s/l	103.4
minimum overload speed	kg/h	24.6
time	s/l	121.5
Turbocharger, boost pressure at rated speed	kPa	70

Engine power, fuel consumption and charging pump pressure ± 3 %

(NEZG 4388)

PREVIEW - YOUFIXTHIS.COM

YouFixThis.com
Download full manual at youfixthis.com

Trouble Shooting

Trouble	*Probable Cause*
Starting motor will not operate or operates slowly.	Battery discharged or faulty. Cables or terminals are loose, corroded or broken. Brushes worn or not seating properly. Brush spring tension too low. Commutator worn. Burned or corroded switch parts. Solenoid faulty.
Starting motor operates, but the pinion does not engage the ring gear.	Foreign matter on armature shaft. Damaged pinion or ring gear. Splines or linkage damaged. Solenoid defective.
The pinion engages, but the starting motor does not crank the engine.	Overrunning clutch slips. Excessive voltage drop in the supply circuit. Discharged or faulty battery. Engine blocked (piston sticking). Brush spring tension too low. Solenoid defective.
Motor continues to operate after the starter switch is released.	Starter switch or solenoid faulty. (Stop engine immediately).
Pinion will not disengage.	Return spring of the solenoid fatigued or broken. Sprial splines rough or damaged. Shifter fork or linkage sticking.
Motor continues to rotate too long after power is cut.	Armature brake defective. Brush springs fatigued or carbon brushes worn excessively

PREVIEW - YOUFIXTHIS.COM

YouFixThis.com
Download full manual at youfixthis.com

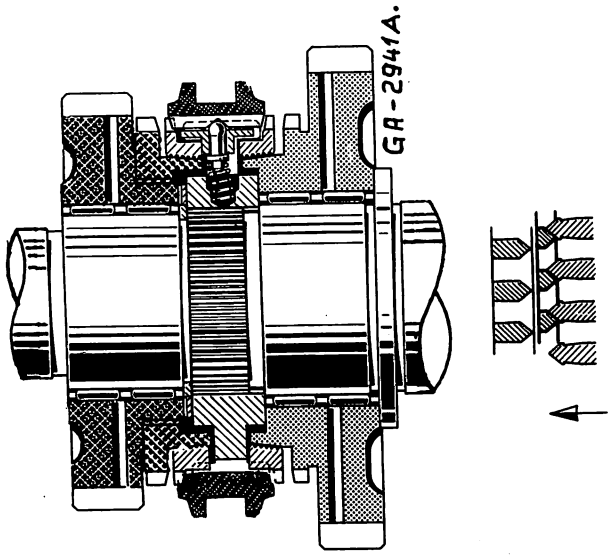

Illust. 49

Synchronizer in pre-engaged position

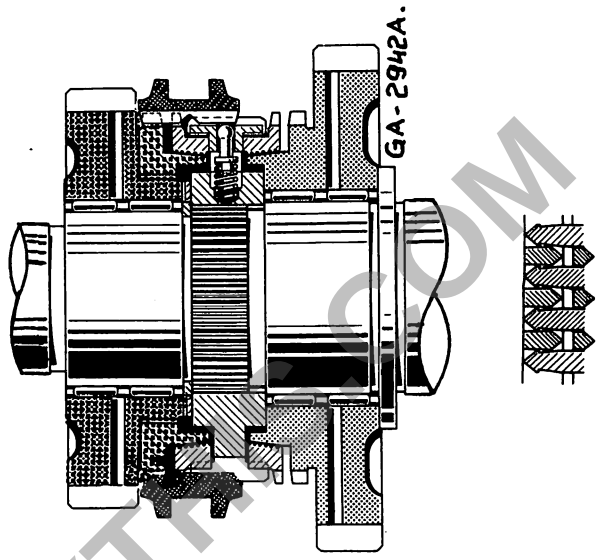

Illust. 50.

Synchroniser unit, gear engaged

It is only when speeds are equal, that persistent pressure on the shifter collar returns the synchroniser ring, and the collar teeth engage the driving gear synchroniser teeth, Illust. 50.

SPECIFICATIONS (mm)

1 - $\frac{32.991}{32.975}$ - 743XL 745XL 844XL

$\frac{34.991}{34.975}$ - 856XL

2 - $\frac{36.100}{36.089}$

3 - 22 Teeth

4 - $\frac{45.000}{44.989}$

5 - 19 Teeth

6 - 14 Teeth 856XL and 25 km/h version 743XL 745XL 844XL
13 Teeth 30 km/h version 743XL 745XL 844XL

7 - $\frac{40.018}{40.002}$

8 - 10 Teeth

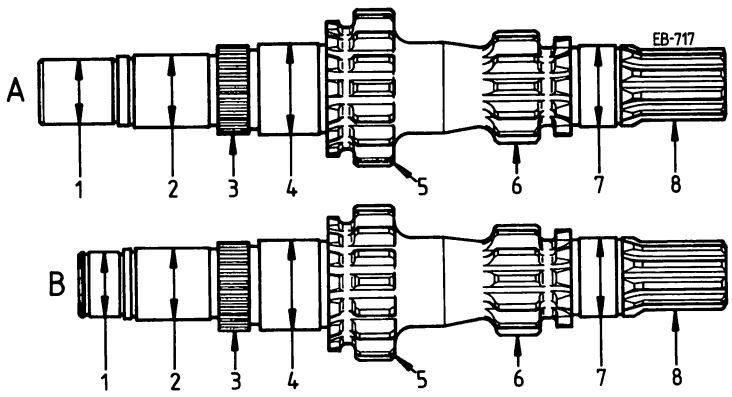

Illust. 51
A - Main drive shaft version for speed reducer.
B - Main drive shaft version without speed reducer.

PREVIEW - YOUFIXTHIS.COM

YouFixThis.com
Download full manual at youfixthis.com

STEP 21

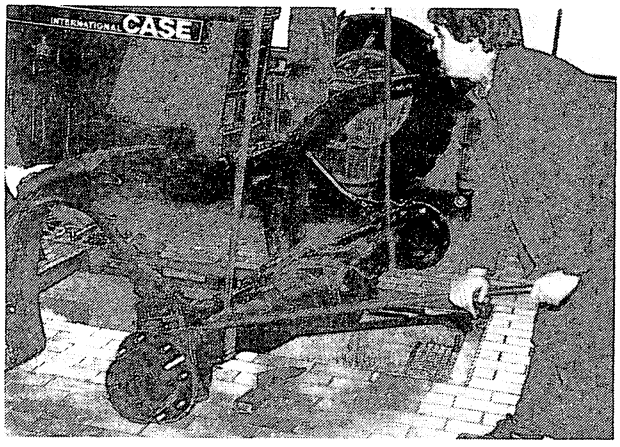

Support the axle with a hoist and move it into position, controlling axle movement with a long bar.

STEP 22

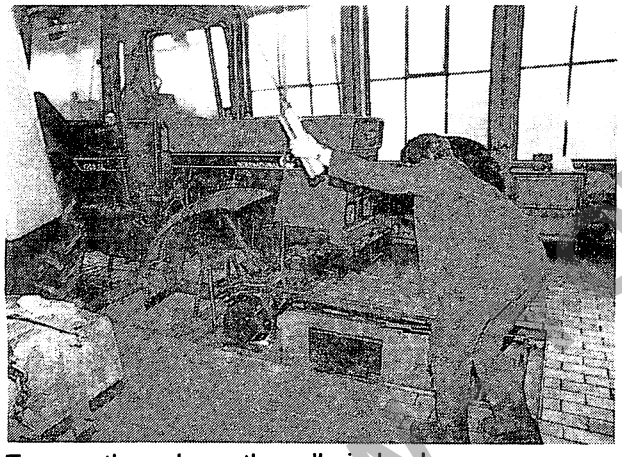

Engage the axle on the roll pin bushes.

NOTE: *On C Family Tractors take care not to hit the suction line.*

STEP 23

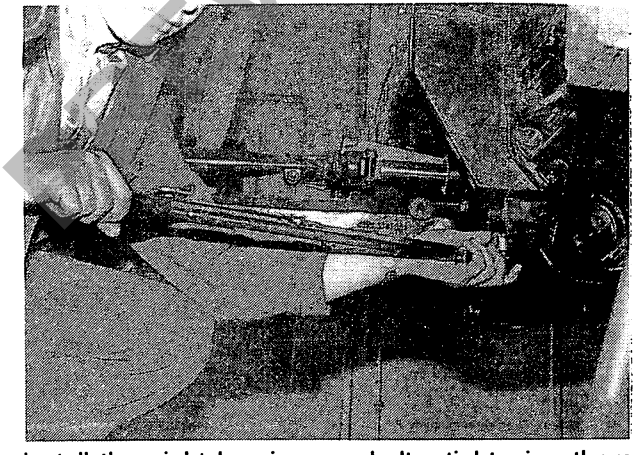

Install the eight bearing cap bolts, tightening them in gradual stages to a torque of 26 daNm.

STEP 24



Check the axle end float between the thrust faces of the bearing caps and the axle, using a feeler gauge. The end float must be 0.1 to 1.2 mm. Add shims if necessary.

STEP 25

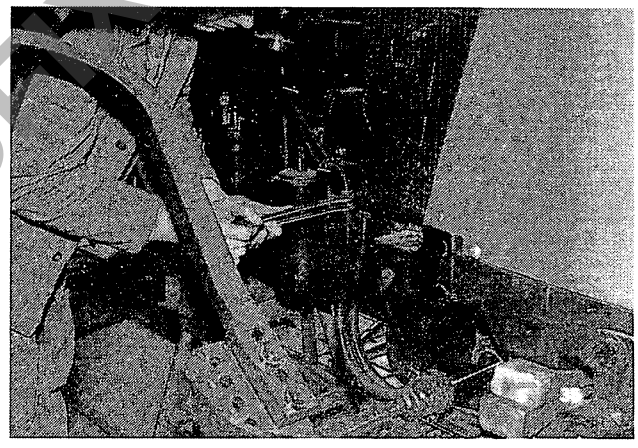

Connect the steering hoses, making sure of strict cleanliness.

STEP 26

Install the drive shaft and shield. See section 6630.

PREVIEW OF THIS PDF

YouFixThis.com Download full manual at youfixthis.com

TABLE OF CONTENTS

SPECIAL TORQUES 3

STANDARD TORQUE DATA FOR NUTS AND BOLTS 3

REMOVAL 4

DISASSEMBLY 6

ASSEMBLY 8

INSTALLATION 10

PREVIEW - YOUFIXTHIS.COM

YouFixThis.com

Download full manual at youfixthis.com

STEP 13

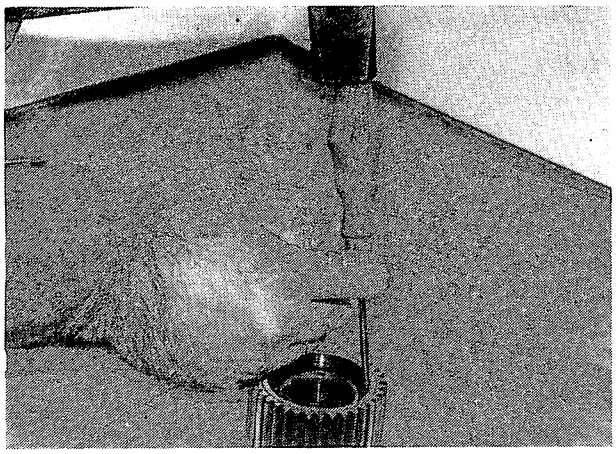

To remove the bearing, tap the ring end with a suitable screwdriver.

STEP 14

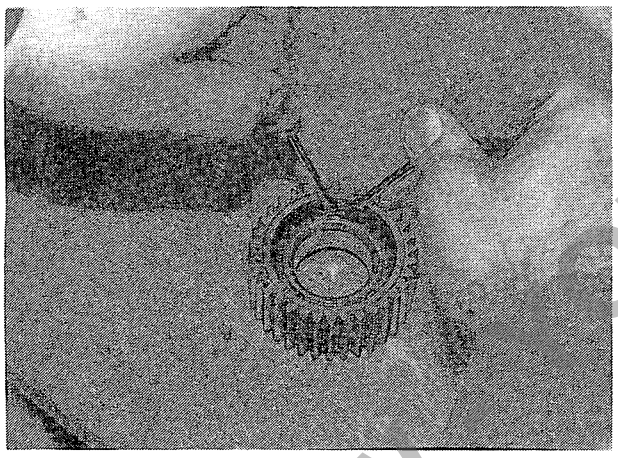

Work the ring out with two screwdrivers.

STEP 15

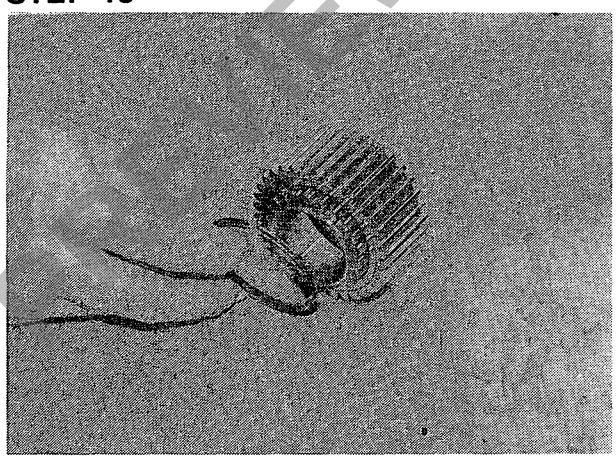

Remove the ring and bearing rollers.

STEP 16

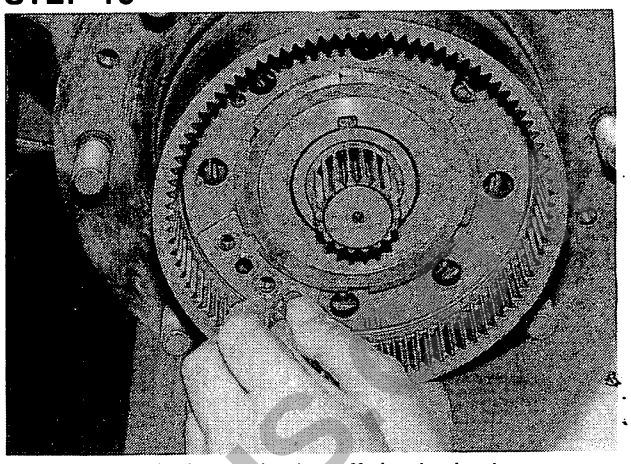

Remove the bolts and take off the lock plate.

STEP 17

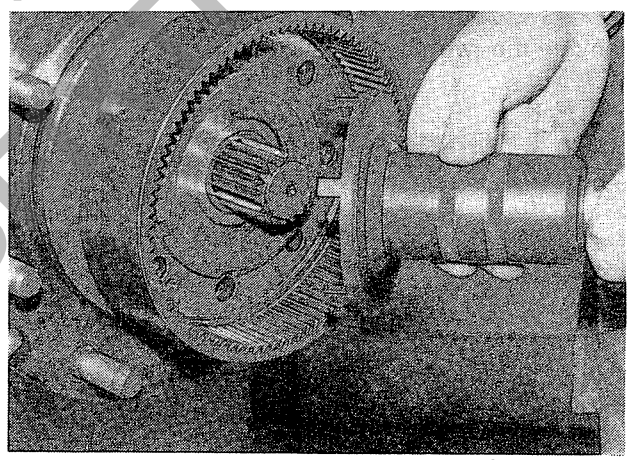

Remove the ring nut, using special tool CAS 1887.

STEP 18

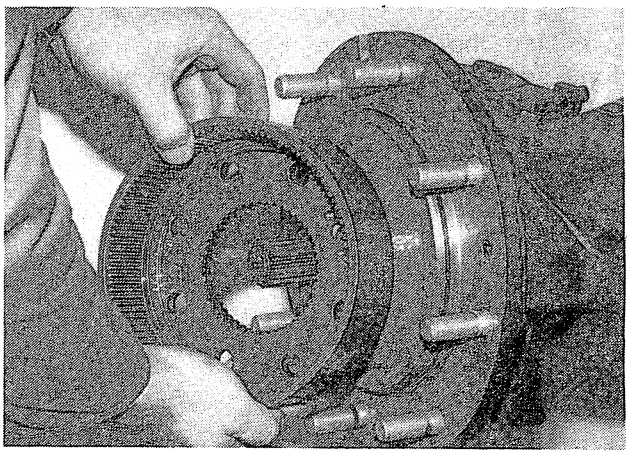

Remove the ring gear.

YouFixThis.com
Download full manual at youfixthis.com

Section
9905

XL CONTROL CENTRE

743XL, 745XL, 844XL, 856XL, 955XL, 1055XL, 956XL, 1056XL, 1255XL and 1455XL Tractors

PREVIEW - YOUFIXTHIS.COM

J I Case
A Tenneco Company

TENNECO

Don 8-59110

Printed in England
November, 1987

YouFixThis.com
Download full manual at youfixthis.com

PREVIEW ONLY

You're viewing 24 of 808 pages

The full manual includes:

- All 808 pages, complete
- Searchable PDF (find any keyword)
- No watermarks
- Instant download
- Print-ready quality

GET FULL MANUAL NOW

Case IH 856 XL, D-155, D-179, D-206, D-239, D-246, D-268, D-310, D-358, DT-239, DT-358, DT402 Workshop Manual



Scan or click anywhere
youfixthis.com

Click anywhere on this page to get the full manual