4. Connect the light wiring harness plug to the tractor ASAE 7-pin plug. Make sure the safety and working lights operate properly from tractor light controls.

NOTE: The left turn signal must flash and right turn signal must be on continuously for a left turn indication. The right turn signal must flash and left turn signal must be on continuously for a right turn indication.

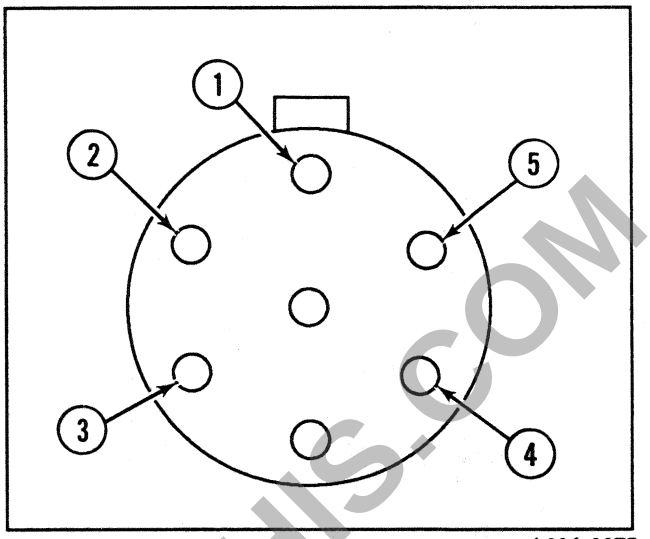

L90A-0075

LIGHT CONTROL PLUG WIRING CONNECTIONS

1. Ground (white)
2. Working Lights (black)
3. Left Signal (yellow)
4. Right Signal (green)
5. Tail Light (brown)

NOTE: For a connector to match European-designed tractors, see your dealer. Wire per tractor manual instructions.

PREVIEW - YOUFIXTHIS.COM

Download full manual at youfixthis.com

SCHEMATICS

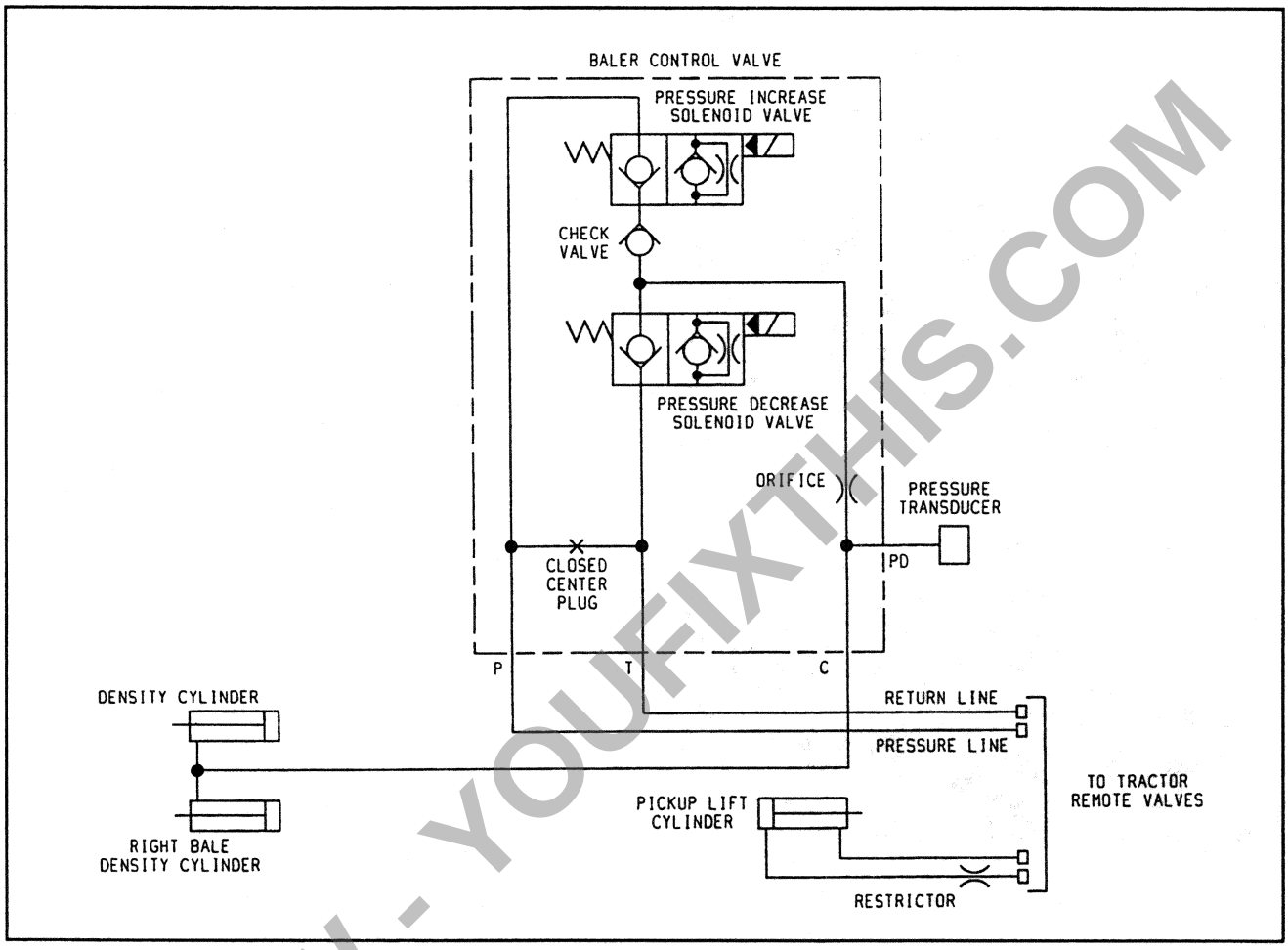

L91A-0197

CLOSED CENTER SCHEMATIC

PREVIEW - YOUFIXTHIS.COM

Download full manual at youfixthis.com

Disassembly

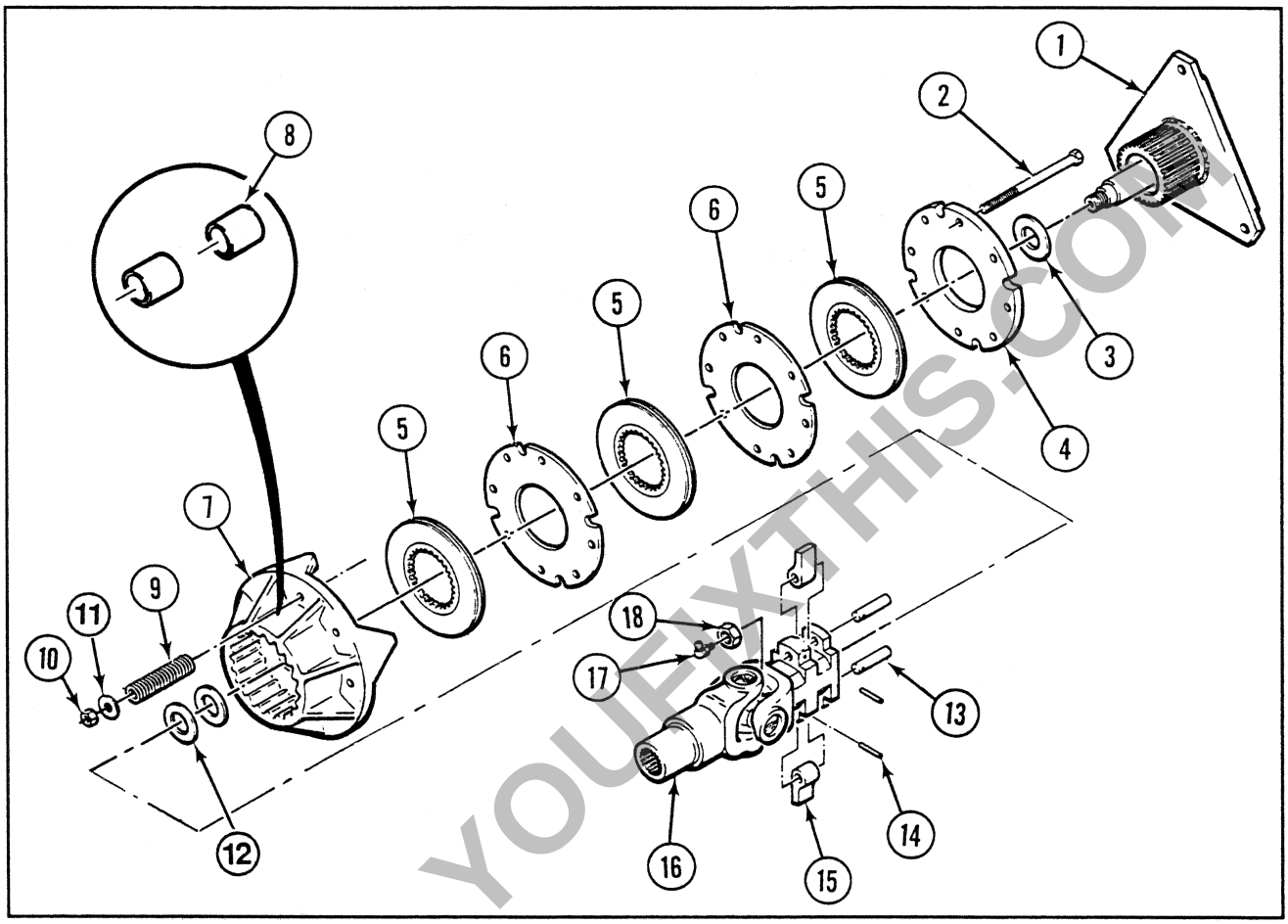

L91A-0178

1. Clutch Pilot
2. Special Bolt
3. Machinery Bushing
4. End Plate
5. Friction Disc
6. Clutch Plate
7. Clutch Housing
8. Bushings
9. Spring
10. Self-Locking Nut
11. Flat Washer
12. Shim
13. Pin
14. Spring Pin
15. Pawl
16. Universal Joint
17. Grease Fitting
18. Self-Locking Nut

1. Remove the grease fitting and the self-locking nut from the end of the clutch pilot.

2. Remove the universal joint.

3. Remove the two shims from the clutch pilot.

4. Remove the clutch pilot from the clutch housing.

5. Remove the machinery bushing from the clutch housing.

6. Remove the self-locking nuts, flat washers, springs, and special bolts that fasten the end plate to the clutch housing.

7. Disassemble the clutch pack.

PREVIEW - YOUFIXTHIS.COM

Download full manual at youfixthis.com

STANDARD TORQUE SPECIFICATIONS

U.S. Standard Hardware

Use the torques in this chart when special torques are not given. These torques apply to fasteners with both UNC and UNF threads as received from suppliers, dry, or when lubricated with engine oil. Not applicable if special graphites, molydisulfide greases, or other extreme pressure lubricants are used.

Grade 5 Bolts, Nuts, and Studs



Size	Pound-Feet (LB·FT)	Newton metres (N·m)
1/4-20	8.4	11
1/4-28	9.7	13
5/16-18	19	24
5/16-24	19	26
3/8-16	31	42
3/8-24	35	47
7/16-14	49	67
7/16-20	55	75
1/2-13	76	105
1/2-20	85	115
9/16-12	110	150
9/16-18	120	165
5/8-11	150	205
5/8-18	170	230
3/4-10	265	360
3/4-16	295	405
7/8-9	430	585
7/8-14	475	640
1-8	645	875
1-12	705	955
1-1/8-7	795	1080
1-1/8-12	890	1210
1-1/4-7	1120	1520
1-1/4-12	1240	1680
1-3/8-6	1470	1990
1-3/8-12	1670	2270
1-1/2-6	1950	2640
1-1/2-12	2190	2970

Grade 8 Bolts, Nuts, and Studs



Size	Pound-Feet (LB·FT)	Newton metres (N·m)
1/4-20	12	16
1/4-28	14	18
5/16-18	25	33
5/16-24	27	37
3/8-16	44	59
3/8-24	49	67
7/16-14	70	95
7/16-20	78	105
1/2-13	105	145
1/2-20	120	165
9/16-12	155	210
9/16-18	170	235
5/8-11	210	285
5/8-18	240	325
3/4-10	375	510
3/4-16	420	570
7/8-9	605	820
7/8-14	670	905
1-8	910	1230
1-12	995	1350
1-1/8-7	1290	1750
1-1/8-12	1440	1960
1-1/4-7	1820	2460
1-1/4-12	2010	2730
1-3/8-6	2380	3230
1-3/8-12	2710	3680
1-1/2-6	3160	4290
1-1/2-12	3560	4820

Issued 5/92

PREVIEW - YOUFIXTHIS.COM

Download full manual at youfixthis.com

General Services Procedures

DANGER

Before doing any maintenance or service work on the baler you must:

Disengage the PTO.
Apply the tractor parking brake.
Stop the tractor engine.
Shut off the baler control console.
Apply the baler flywheel brake.
Make sure all moving parts have stopped.

Bearing Replacement

Sealed ball bearings are used on several shafts and are usually held in position in the structure with bearing flanges. The bearings are held in position on the shaft by a locking collar. The locking collar has a counterbore which is eccentric with the bore in the locking collar. This eccentric recess engages the eccentric end of the bearing inner ring when the bearing is assembled on the shaft. The bearing is engaged on the bearing inner ring with the locking collar. This assembly grips the shaft tightly with a positive binding action that increases with use. A set screw in the locking collar applies additional locking.

1. Loosen the set screw.

2. Use a drift punch inserted in the drift pin hole to rotate and loosen the locking collar. Rotate the locking collar opposite the direction of normal shaft rotation.

3. Remove the locking collar.

4. Support the shaft.

5. Remove the bolts for the bearing flanges.

6. Slide the bearing and the bearing flanges from the shaft.

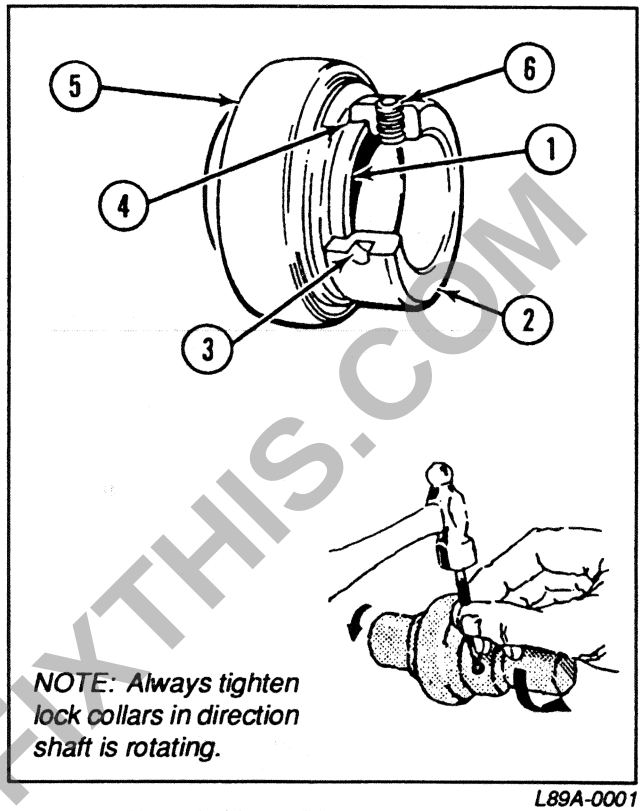

L89A-0001

1. Extended Inner Ring Cam
2. Locking Collar
3. Drift Pin Hole
4. Collar Cam
5. Bearing
6. Set Screw

NOTE: Removing paint and corrosion from the shaft will make removal easier.

7. Put the bearing and the bearing flanges on the shaft. Make sure the bearing inner ring is turned the correct direction.

8. Install the bolts for the bearing flanges. Make sure the bearing is straight within the bearing flanges. Tighten the bolts evenly.

9. If a bearing is being installed on the other end of the shaft, repeat steps 7 and 8 for the other bearing.

PREVIEW - YOUFIXTHIS.COM
Download full manual at youfixthis.com

CHECKLISTS

AFTER ONE HOUR OF OPERATION

___ Check the adjustment of the main drive slip clutch.

___ Check the stuffer brake for overheating.

___ Check the stuffer clutch and linkage for correct operation.

___ Check baler wheel nut torque.

DAILY

___ Visually check for loose or missing fasteners and parts as you do the maintenance. Also check for damage and excessive wear of parts.

___ Lubricate all lubrication points as required. Visually inspect all lubrication points to make sure lubrication is being received. See Lubrication Specifications in this section.

___ Check for broken or missing lubrication lines on the Centralized Lubrication System. Visually inspect all lubrication points to make sure lubrication is being received.

___ Check tractor connections for correct hitch, implement drive line, hydraulic, and electrical connections. Make sure all controls work correctly.

___ Check the tractor hitch bolt for the correct torque.

___ Check that all safety and working lamps work correctly.

___ Check the tension for all of the drive chains for excessive tightness or looseness.

___ Check tire pressure during the coolest part of the day.

___ Check the flywheel brake adjustment. See Section 2002.

___ Check supply of shear bolts.

___ Check the quantity of twine in the twine compartments.

___ Check twine for correct routing and threading. Check that twine is not tangled, knotted, or caught over a bolt. See Section 6001.

___ Check twine tension. See Section 6001.

___ Check the needle protection linkage adjustment. See Section 6001.

___ Check when starting to bale that the baler control console is ON and the tractor hydraulic control valve is engaged and locked on to the supply power to the baler control valve.

EVERY 50 HOURS

___ Check baler wheel nut torque.

AFTER THE FIRST 1000 BALES

___ Tighten the nuts on the bolts that fasten the plunger cranks to the gearbox output shaft to 325 LB·FT (440 N·m). Tighten the jam nuts to 150 LB·FT (205 N·m).

___ Tighten the cap screws at both ends of the connecting rods for the plunger to 210 LB·FT (285 N·m).

___ Tighten the bolts and nuts that fasten the bearings to the plunger cranks to 265 LB·FT (360 N·m).

___ Inspect all of the gearbox mounting hardware and replace as required.

___ Check the oil level in the gearbox.

PREVIEW - YOUFIXTHIS.COM

Download full manual at youfixthis.com

GENERAL MACHINE SPECIFICATIONS

Weight (approx.)
- Baler ..... 10,700 LB (4853 kg)
- Tongue (empty) ..... 1900 LB (860 kg)

Length
- without bale chute ..... 267 IN (6782 mm)
- with bale chute ..... 336 IN (8532 mm)

Width (overall)
- Shipping, less tires ..... 85.5 IN (2173 mm)
- Operating ..... 107.4 IN (2729 mm)

Height
- Top of knotter shielding ..... 104.5 IN (2655 mm)
- Top of hand railing ..... 124.8 IN (3170 mm)

Bale Chamber
- Width ..... 31.5 IN (800 mm)
- Height ..... 34.4 IN (875 mm)

Bale Length ..... adjustable up to 98 IN (2500 mm)

Tire Size
- Baler ..... 21.5 x 16.1, 8 or 10 ply
- Pickup Gauge Wheel ..... 4.00 x 16 (2) pneumatic w/inner tube

Tire Pressure
- 21.5 x 16.1, 8 or 10 ply ..... 26 psi (180 kPa)
- 4.00 x 16 ..... 40 psi (276 kPa)

Wheel Nut / Bolt
- Baler ..... 5/8-18 UNF
  - Torque ... 170 to 180 LB·FT (230 to 244 N·m)

Main Drive
- Standard PTO speed ..... 1000 rpm
- PTO ..... ASAE Type 2, 1-3/8 IN, 21 teeth
- Drive line category ..... ASAE Category 6
- Drive protection ..... overrunning and slip clutches, and shear bolt
- Flywheel brake ..... direct acting
- Flywheel diameter ..... 29.5 IN (750 mm)
- Flywheel width ..... 4.45 IN (110 mm)
- Flywheel weight ..... 360 LB (163 kg)
- Gearbox ..... enclosed double reduction
  - gears ..... spiral bevel (1st set) spur (2nd set)
- Bearings ..... tapered roller and spherical
- Lubrication ..... oil bath

Pickup Assembly
- Pickup outside width ..... 91.1 IN (2315 mm)
- Width tine to tine ..... 70.1 IN (1782 mm)
- Width inside ..... 77.4 IN (1968 mm)
- Overall width incl. tires ..... 107.4 IN (2729 mm)
- Number of bars 4

Pickup Assembly, cont.
- Number of tines 112
- Tine spacing ..... 2.60 IN (66 mm)
- Tine bar bearings ..... sealed ball
- Drive ..... RC50 and RC60 roller chain
- Protection ..... slip and overrunning clutches
- Height control ..... fixed gauge wheels (2) and adjustable control arm
- Pickup lift (standard) ..... hydraulic cylinder

Bale Chamber Feeding System
- Packers ..... fork type with 4 hard surfaced tines
  - crank ..... heavy duty
  - drive ..... RC80 roller chain
  - protection ..... splined slip clutch
- Charge chamber volume ..... 6.65 ft³ (188 m³)
- Windrow size compensation ..... automatic charge sensor engages stuffer clutch
- Stuffer ..... fork type
  - drive ..... RC80 roller chain
  - drive protection ..... shear bolt

Plunger
- Speed ..... 40.97 strokes/min
- Length of stroke ..... 27.95 IN (710 mm)
- Mounting ..... 4 tapered roller bearings (sealed); 2 ball bearing rollers (sealed)

Control and Monitoring System
- Type ..... microprocessor based electronic control
- Baler controls
  - Plunger load to control bale density, alarm volume, displays and reset field bale count, manual hydraulic pressure control
- Baler functions monitored
  - Plunger load, bale chamber tension pressure, bale count - field and total, flakes/bale, driving meter, stuffer cycles, knotter and needle performance, feeder slip, gearbox overheating, automatic electronic system performance checking
- Non-Volatile Memory Storage
  - Load settings, display and control modes, bale counts
- Display ..... LCD with back lighting
- Control switches ..... hermetically sealed membrane with back lighting
- ON•OFF functions .... both automatic and manual
- Electrical protections ..... under and over voltage, output overload (short circuit), etc.
- Baler switches ..... hermetically sealed reed

PREVIEW - YOUFIXTHIS.COM

Download full manual at youfixthis.com

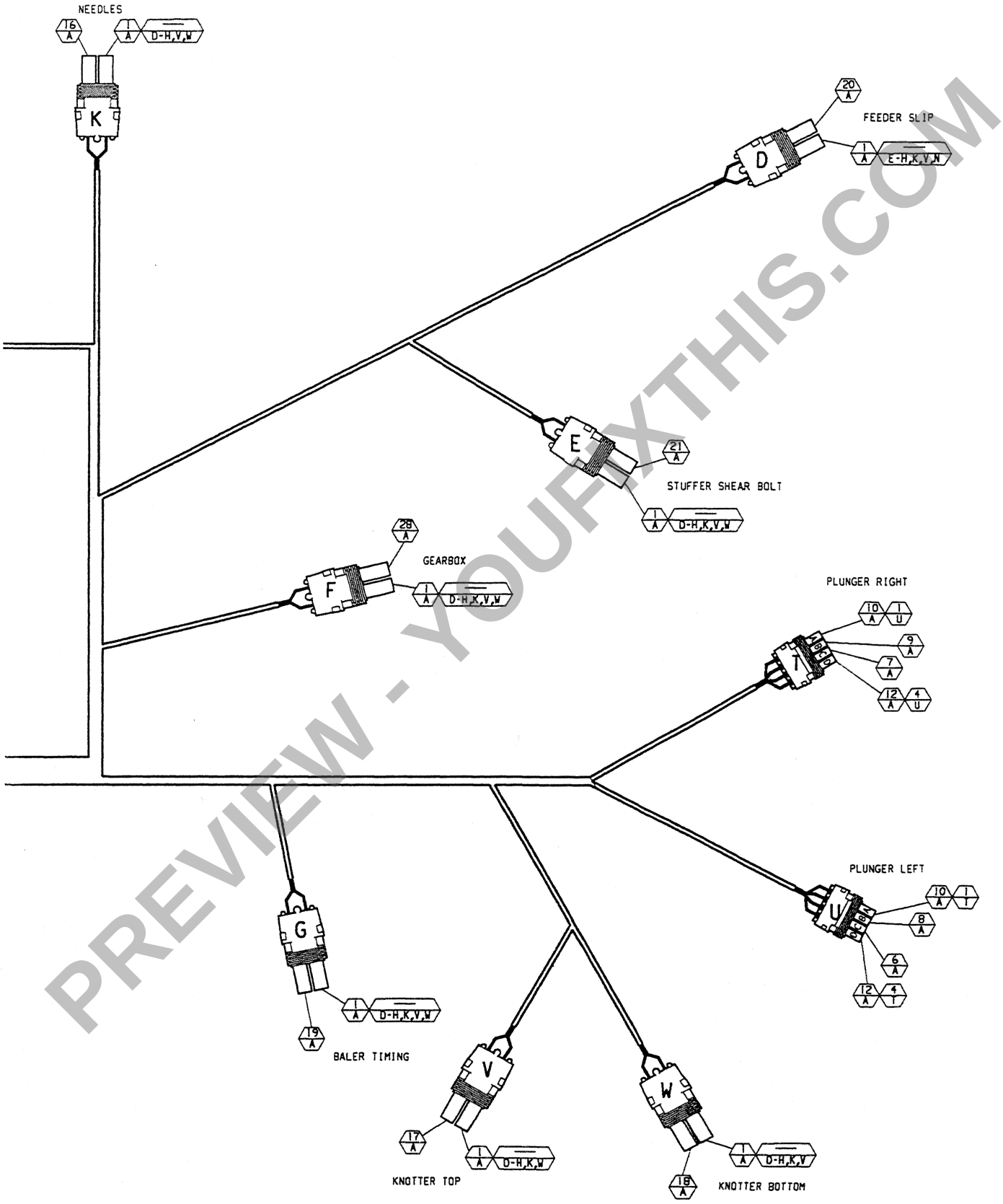

PREVIEW - YOUFIXTHIS.COM

Download full manual at youfixthis.com

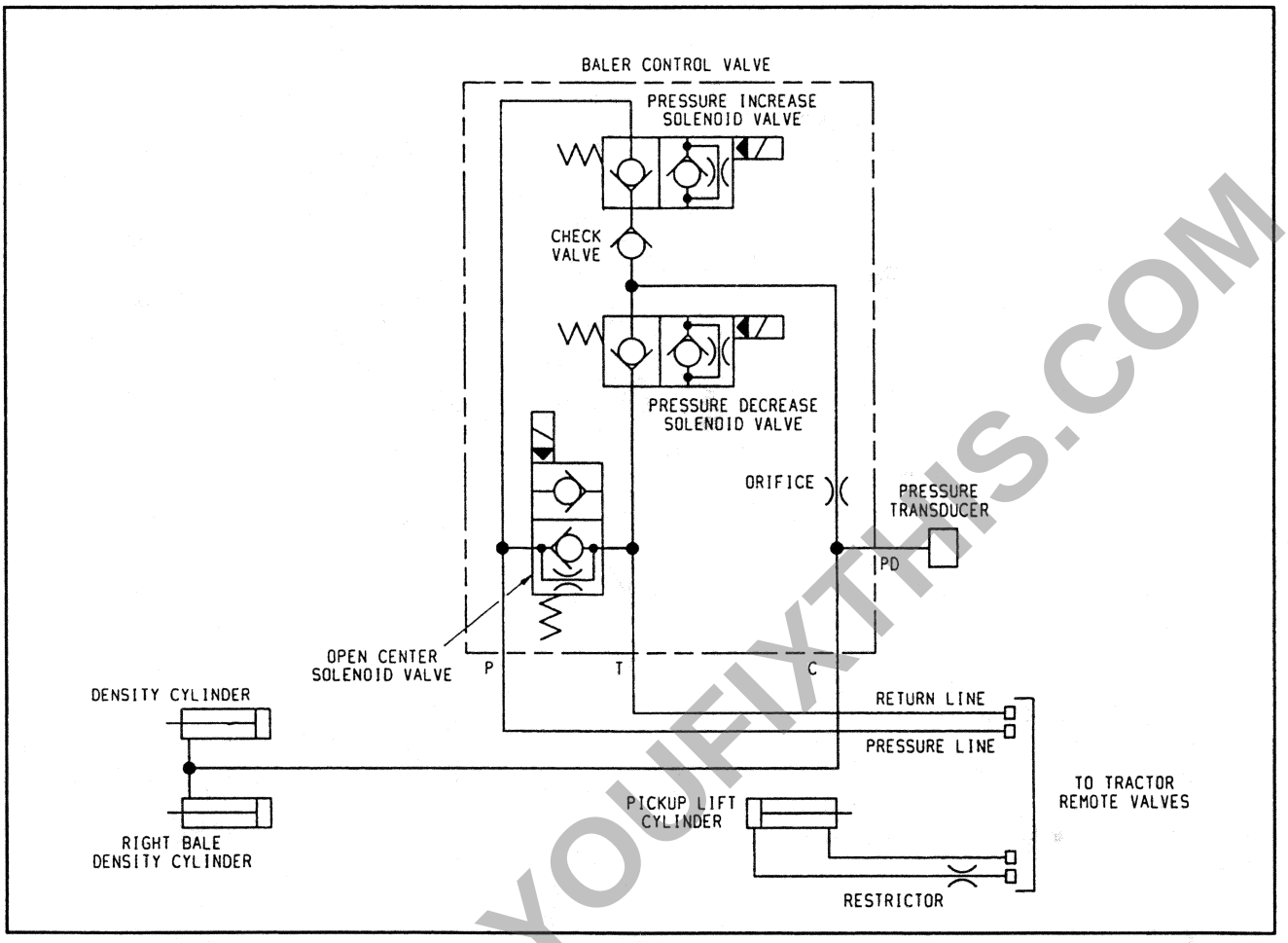

L91A-0196

OPEN CENTER SCHEMATIC

PREVIEW - YOUFIXTHIS.COM

Download full manual at youfixthis.com

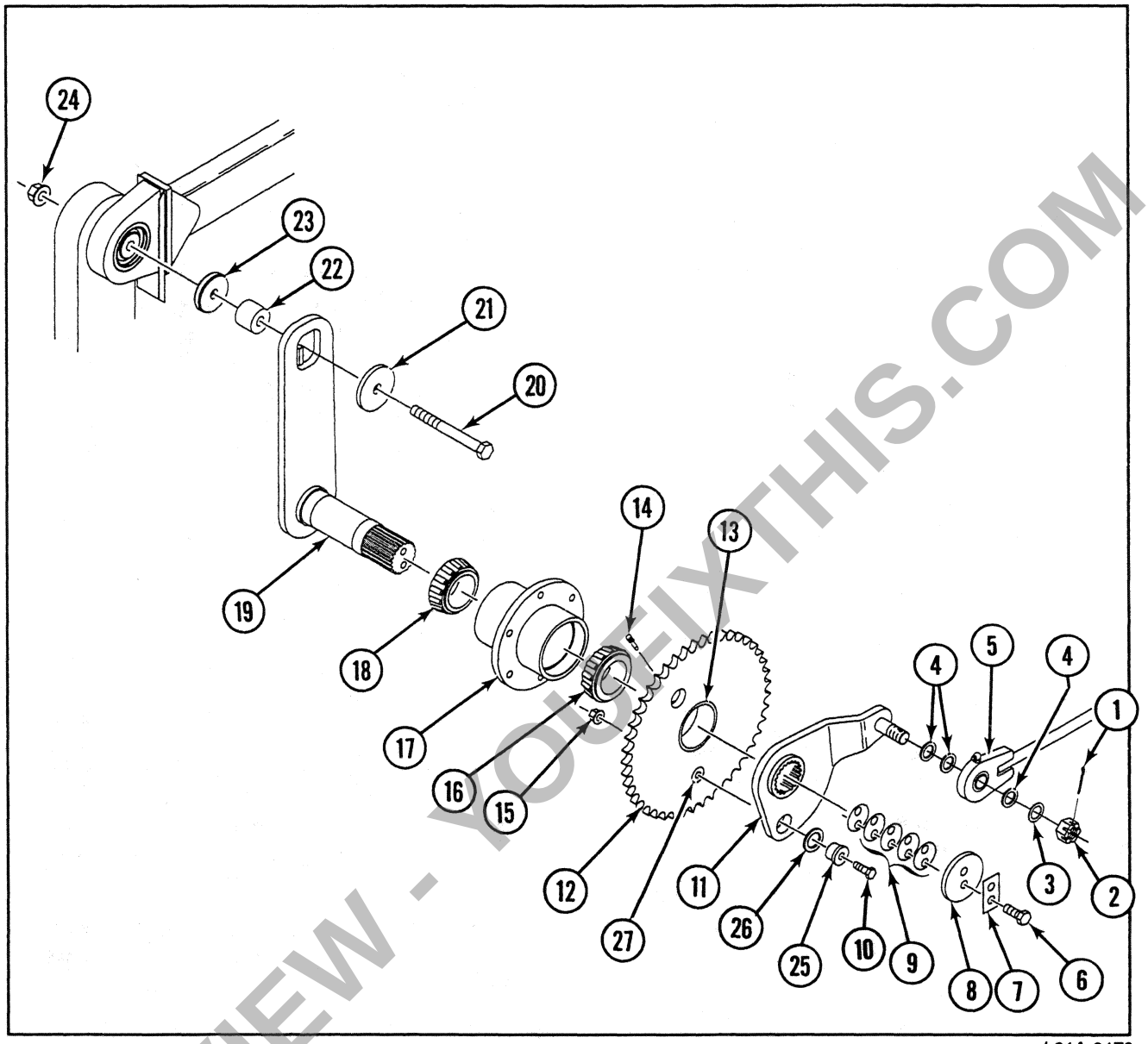

L91A-0179

NEEDLE PROTECTION ARM

1. Cotter Pin
2. Slotted Nut
3. Thin Machinery Bushing
4. Thick Machinery Bushing
5. Needle Protection Rod
6. Cap Screw
7. Lock Plate
8. Retainer Cap
9. Shims
10. Shear Bolt
11. Needle Protection Arm
12. Stuffer/Knotter Drive Sprocket
13. Bushing in Stuffer/Knotter Drive Sprocket
14. Grease Fitting
15. Special Nut
16. Outer Bearing Cone and Seal
17. Bearing Hub
18. Inner Bearing Cone and Seal
19. Auxiliary Drive Arm
20. Cap Screw
21. Cap Plate
22. Drive Bushing
23. Special Washer
24. Special Nut
25. Shear Bolt Bushing
26. Machinery Bushing
27. Shear Bolt Bushing

PREVIEW - YOUFIXTHIS.COM

Download full manual at youfixthis.com

Removing A Bale From The Bale Chamber

1. Before starting this procedure, make sure there is enough hay in the windrow to complete the procedure. There must be enough hay to make a minimum of one to one and a half bales of hay. Very dry crop is best for this procedure.

2. Manually trip the knotter and tie off the bale in the chamber.

3. Press and hold the PLUNGER SET V switch until a 000 set load is displayed on the baler control console.

4. Lock the stuffer door in the tripped position. It is necessary to hold the stuffer door in the tripped position manually so the stuffer will run continually during this procedure. Fasten locking type pliers on the tab of the sensor door arm to hold the tab away from the adjusting bolt as shown.

If locking pliers are not available, the adjusting bolt can be adjusted to hold the stuffer door in the tripped position. Make sure the adjustment bolt is returned to the original adjustment when the procedure is complete.

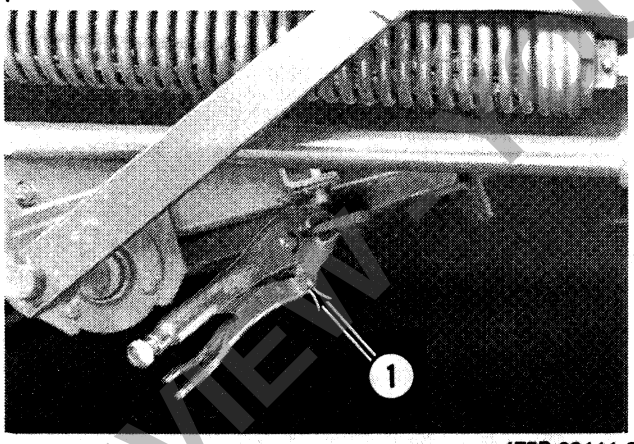

475B-90111-3

1. Locking Pliers clamped on Tab of Stuffer Sensor Door

5. Removing the hay from the bale chamber will be easier if several short bales are made. To make the short bales, loosen the bale length adjustment handle. Raise the bale length adjustment handle so the bolt is at the top of the slot. Tighten the bale length adjustment handle.

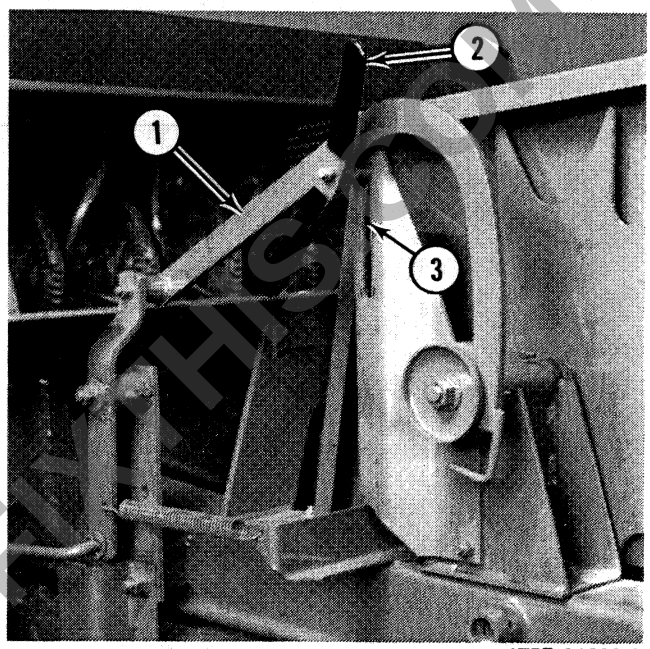

475B-91088-8

1. Knotter Trip Linkage
2. Bale Length Adjustment Handle
3. Slot

6. Begin baling at a slow PTO speed (approximately 1/3 rated speed). Select the lowest tractor gear range for the ground speed. Bale until hay has been fed into the bale chamber to push out the tight bale. If necessary, manually trip the knotter and tie off the loose hay in the bale chamber.

7. Remove the tight bale from bale chute or accumulator. Manually pull the short loose bale out of the bale chamber.

NOTE: If necessary, insert an iron bar under the twines on the end of the bale and pull the bale out with a log chain and a pickup or a tractor.

8. Remove the locking pliers from the tab of the stuffer sensor door.

NOTE: If the sensor door adjustment bolt was adjusted downward, adjust the bolt to correct specifications see section 5002. Adjust the knotter trip linkage to make the bale length desired.

PREVIEW ONLY
Download full manual at youfixthis.com

IMPLEMENT DRIVE LINE

⚠ DANGER

Before doing any maintenance or service work on the baler you must:

Disengage the PTO.
Apply the tractor parking brake.
Stop the tractor engine.
Shut off the baler control console.
Apply the baler flywheel brake.
Make sure all moving parts have stopped.

Troubleshooting

PROBLEM	POSSIBLE CAUSE	CORRECTIONS
Excessive noise in baler IDL drive shaft	Hitch points not properly located	Set hitch according to specification.
	Telescoping member dry	Grease telescoping members regularly.
	Bent shielding	Straighten or replace bent unit.
	Universal joints worn	Replace joints.
	Angles at universal joints not equal	Adjust the bearing support for carrier bearing to make universal joint angles equal. See Tractor Connections in this section. Check ASAE drawbar dimensions and implement driveline alignment.
	Worn splines on shaft or in universal joint	Replace worn parts. If the splines on the PTO shaft or in the yoke at the front of the IDL have excessive wear, a special two bolt clamp yoke can be installed on the IDL. The special two bolt clamp yoke is available from your dealer.

PREVIEW - YOUFIXTHIS.COM

Download full manual at youfixthis.com

SAFETY PRECAUTIONS

The manufacturer of this product is concerned about your safety and is committed to the prevention of accidents.

Major factors in prevention of accidents are safe and proper use of the equipment and an attitude of safety. Be sure you or anyone who does any maintenance or service work on this machine reads and understands this manual prior to doing any maintenance or service work.

⚠ ATTENTION

This Safety Alert Symbol indicates important safety messages in this manual. When you see this symbol, carefully read the message that follows and be alert to the possibility of personal injury or death.

Always have safety shields and guards in place before operating the baler.

Always disengage PTO and shut off engine before:

1. **leaving tractor seat**
2. **lubricating**
3. **cleaning the machine**
4. **adjusting the machine**

WARNING - DO NOT attempt servicing or adjustments until baler flywheel has stopped rotating. Always apply the flywheel brake before working on baler.

Always lock tractor brakes and block wheels before working on or under the machine.

DO NOT attempt to thread the needles or adjust the twine tension while the baler is operating. Serious personal injury can result from accidental operation of the needle carriage. DISENGAGE the PTO, SHUT OFF the tractor engine, and apply the flywheel brake.

Always remove tractor ignition key when parking machine.

Always keep hands, feet and clothing away from moving parts, and never wear loose clothing while operating the machine.

Never check or lubricate chains while machine is running.

DO NOT attempt to remove twine from the bale chamber or knotter while machine is running.

After lubricating, servicing, or adjusting the machine, make sure all tools and equipment have been removed before operating the machine.

PREVIEW - YOUFIXTHIS.COM

Download full manual at youfixthis.com

PREVIEW - YOUFIXTHIS.COM

Download full manual at youfixthis.com

24. If the IDL (implement drive line) was removed from the main drive shaft, lubricate the splines of the main drive shaft of the baler with oil or grease. Align the bolt in the yoke of the IDL with the bolt groove in the main drive shaft. Install the yoke on the main drive shaft. Tighten the special nut on the bolt to 150 LB·FT (205 N·m).

25. Lubricate splines of the tractor PTO shaft with oil or grease. Connect the IDL to the tractor PTO shaft. If the IDL has a quick disconnect yoke, make sure the locking pins are engaged in the groove on the tractor PTO shaft. If the IDL has a clamp yoke, tighten the special nuts on the bolts to 76 LB·FT (105 N·m).

NOTE: If the splines on the PTO shaft or in the yoke at the front of the IDL have excessive wear a special two bolt clamp yoke can be installed on the IDL. The special two bolt clamp yoke is available from your dealer.

⚠ WARNING

A loose yoke can slip off a shaft and result in injury to personnel or damage to the machine.

When attaching a quick disconnect yoke, it is important that the spring activated locking pins slide freely and are seated in the groove in the tractor PTO shaft.

When attaching a clamp yoke, tighten the bolts to the correct torque.

PREVIEW - YOUFIXTHIS.COM

Download full manual at youfixthis.com

Over Pressure

The pressure in the hydraulic system is limited by the over pressure control function of the baler control console. The over pressure control function operates similar to a hydraulic relief valve. The pressure limit is set at the factory and is not adjustable. When the pressure reaches the limit, the words OVER PRESSURE will be shown on the screen with the pressure reading. The baler control console will then energize the decrease pressure solenoid for a set amount of time to decrease the pressure. The words OVER PRESSURE will be shown on the screen as long as the pressure is above the limit.

The pressure in the system is determined by the load setting and the resistance of the crop. A repeated over pressure condition can be prevented by lowering the load setting to match the conditions of the crop.

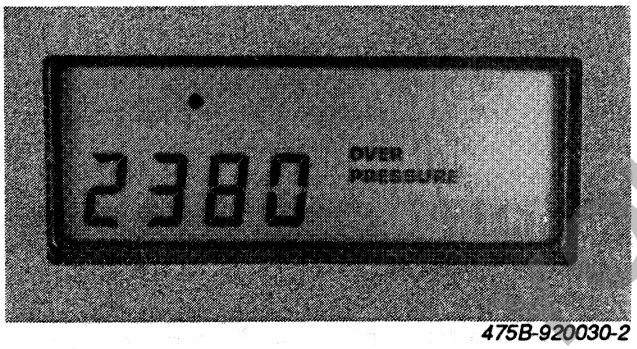

475B-920030-2

Bale Count - Field

Each time the needle carriage completes a cycle, the needle switch on the right side of the baler signals the baler control console to increase the bale counter memory by one. Momentarily pressing the BALE COUNT switch will cause the display to be interrupted and the bale count will be displayed for approximately four seconds. The maximum number of bales held in the memory is 9,999.

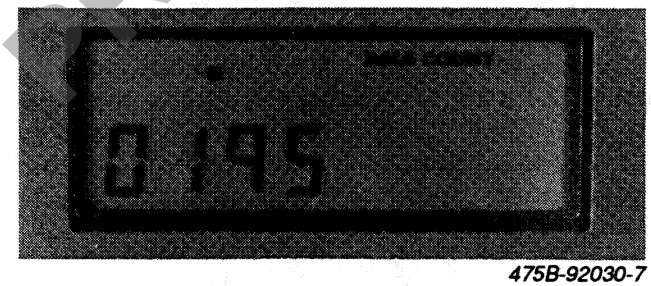

475B-92030-7

FIELD BALE COUNT

Reset Bale Count - Field

Press and hold the RESET switch and the BALE COUNT switch. The alarm will sound and the current bale count will flash on the screen three times. The words RESET and BALE COUNT will also flash. The display will show 0000 and the word BALE COUNT when the reset is complete. If the switches are released while the display is flashing, the current field bale count will be shown and the reset will not be completed.

Bale Count - Baler Total

After the bale count is displayed for four seconds, the baler control console will automatically display BALE COUNT TOTAL X 10 and the total bale count for approximately four seconds. The total bale count memory cannot be cleared or reset by the operator. The last ten bales do not show in the display, but are never lost from the memory. The maximum number of bales held in the memory is 99,990. The photo shows a bale count of 3040.

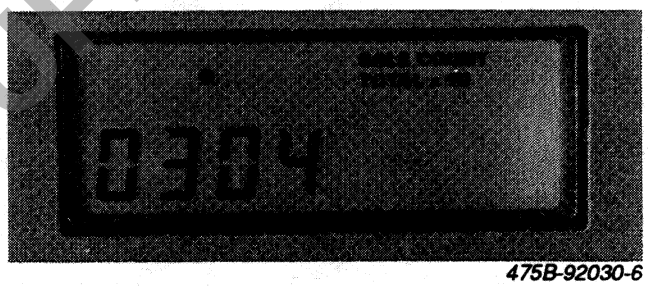

475B-92030-6

BALE COUNT TOTAL X 10 INDICATOR

Download full manual at youfixthis.com

Removal

1. Remove the spring that is connected to the pivot arm.

2. Remove the cotter pin and the washer from the lower end of the connecting rod. Remove the connecting rod from the pivot arm. Remove the bolt through the pivot arm and the holding finger shaft. Pull the pivot arm from the holding finger shaft.

3. Remove the nuts the two bolts that fasten the left mounting bracket to the charge chamber. Support the holding fingers.

4. Remove the nuts from the two bolts that fasten the right mounting bracket to the charge chamber and remove the holding fingers from the baler.

5. Move the left end of the holding fingers down and to the rear. Pull the holding fingers out the left side of the baler.

6. Remove the bolt through each bearing and the holding finger shaft. Pull the bearings off of each end of the holding finger shaft.

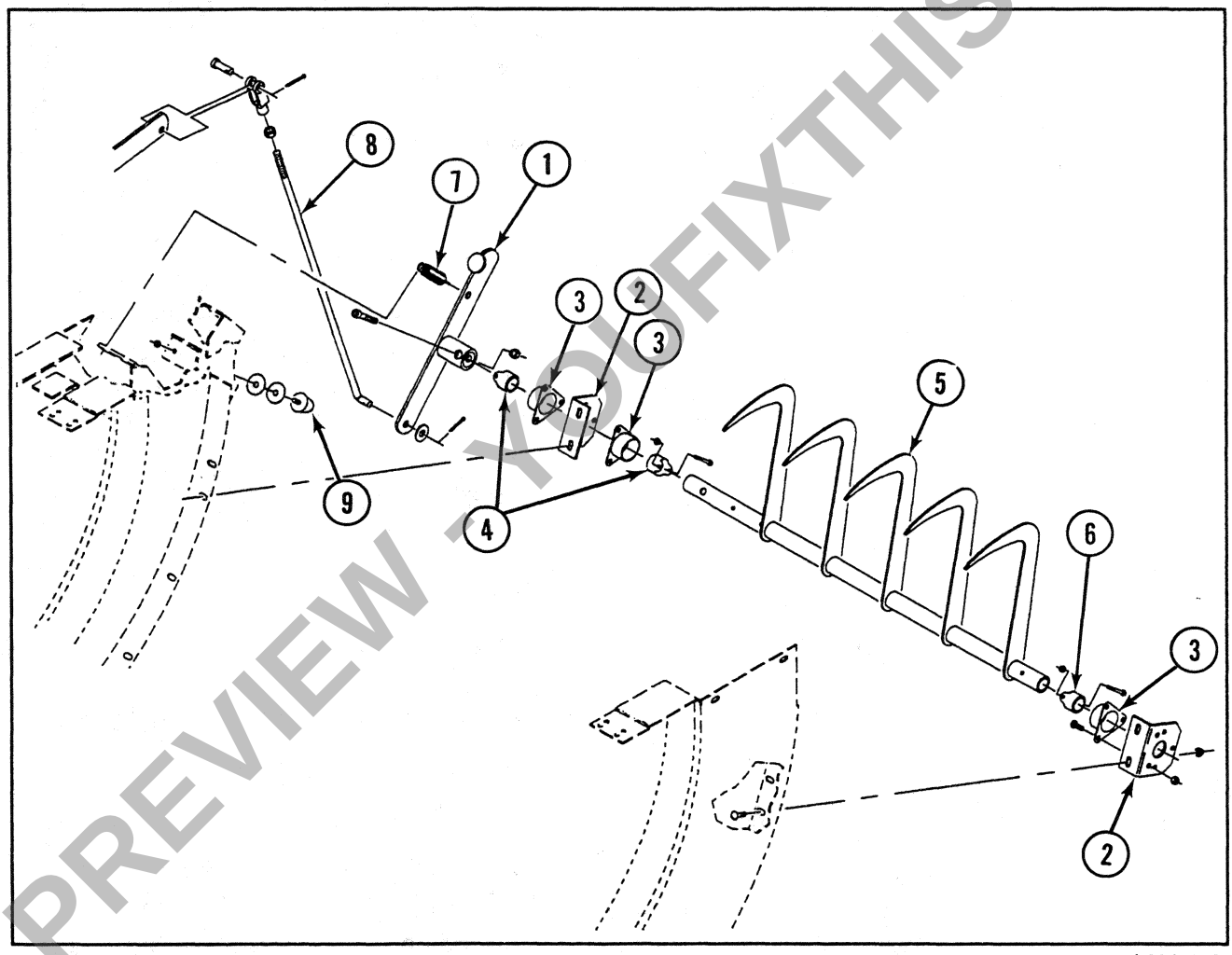

L92A-0007

1. Pivot Arm
2. Mounting Bracket
3. Bearing Housing
4. Right Bearings
5. Holding Fingers
6. Left Bearing
7. Spring
8. Connecting Rod
9. Rubber Bumper

PREVIEW - YOUFIXTHIS.COM

Download full manual at youfixthis.com

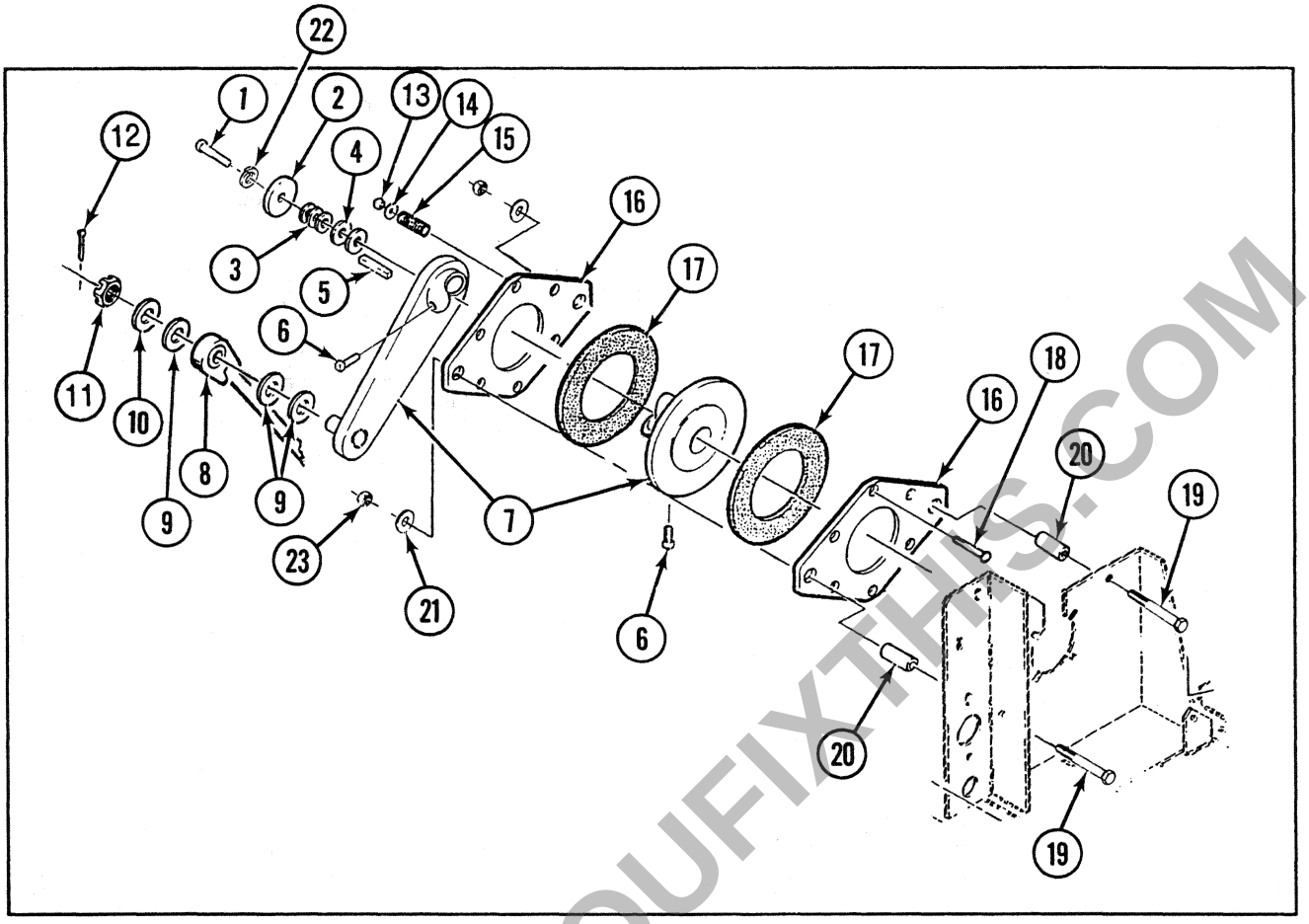

L91A-0219

1. Cap Screw
2. Cap
3. Shims
4. Flat Washers
5. Key
6. Set Screw (2)
7. Right Needle Arm
8. Needle Actuating Rod
9. Thick Machinery Bushing
10. Thin Machinery Bushing
11. Slotted Nut
12. Cotter Pin
13. Self-Locking Nut
14. Flat Washer
15. Spring
16. Pressure Plate
17. Clutch Disc
18. Cap Screw
20. Spacer
21. Flat Washer
22. Lock Washer
23. Self-Locking Nut

PREVIEW - YOUFIXTHIS.COM

Download full manual at youfixthis.com

PREVIEW ONLY

You're viewing 18 of 496 pages

The full manual includes:

- All 496 pages, complete
- Searchable PDF (find any keyword)
- No watermarks
- Instant download
- Print-ready quality

GET FULL MANUAL NOW

Case 8570, 8570 Mid-Size Service Manual

Scan or click anywhere
youfixthis.com

Click anywhere on this page to get the full manual