RUN-IN PROCEDURE

Engine Run-In

It is important that the run-in instructions for a new engine be followed. Proper run-in will increase engine power and service life. If the engine is not run-in properly the piston rings and cylinder bore can be damaged.

IMPORTANT: *Your tractor is shipped from the factory with SAE10W-30 oil in the engine crankcase. If the tractor is operated in high ambient temperature and/or severe operating conditions, change to the recommended oil viscosity grade as specified. See Engine Lubrication on Page 178.*

During the initial 100 hours of operation, operate the tractor as follows:

1. Do not run the engine at idle speed for long periods of time.
2. Operate at reduced load range as much as possible.
3. Do not lug the engine. Shift to a lower gear to prevent lugging.
4. Operate in a gear range that permits acceleration to governed speed when more power is required.
5. Monitor the engine instruments frequently during operation. Reduce throttle and/or load if the coolant temperature exceeds safe operating limits.
6. Check the oil level every 8 to 10 hours of operation.
7. Avoid starting and immediately stopping a cold engine.

Differential Oil

Change the differential oil after the first 50 hours of operation then use the regular service intervals as specified on Page 162.

Planetary Oil

Change the planetary oil after the first 50 hours of operation then use the regular service intervals as specified on Page 162.

Wheel Bolts and Nuts

Check the wheel bolt torque daily before use until the specified torque is maintained. Tighten the wheel bolts and nuts to the torques specified in the Tires, Wheels, Spacing and Ballast Section on Page 126.

NOTE: *Retorque wheels every 250 hours of operation on tractor used for scraper application.*

PREVIEW - YOUFIXTHIS.COM

Download full manual at youfixthis.com

OPERATORS SEAT

Your cab has a seat made of soft material for maximum operator comfort.



Remove dust and dirt from the seat with a vacuum cleaner or soft brush. Clean stains with the correct use of a material cleaner.

Before removing stains, try to find what type and how old the stains are. Some stains can be removed with water or soap solution.

Stains must be removed immediately. Oil stains and some types of grease are very difficult to remove and some times can not be removed completely. When removing this type of stain, make sure you do not make the area of the stain larger. Some times it is better to have a small stain than a large stain area.

WARNING: *Never use gasoline, naptha or any volatile material for any cleaning purposes. These materials may be toxic and/or flammable.* M138A

PREVIEW - YOUFIXTHIS.COM

Download full manual at youfixthis.com

STORAGE PREPARATION

When your tractor is not going to be used for some time, store the tractor in a dry protected place. Leaving your tractor outside, open to the weather, will shorten its life.

Follow the procedure below when your tractor is placed in storage for periods up to six months.

See your dealer for the procedure on longer periods of storage.

1. Wash or clean and completely lubricate the tractor. See the Lubrication Section in this manual.
2. Clean the inside of the tractor including the operators cab and instrument console.
3. Rodents can damage a tractor in storage. Rodents will eat plastic, insulation or rubber material. Clean the areas where rodents may nest. Leave access panels and doors open to remove convenient nesting pockets. In some conditions, leaving moth balls will help discourage rats and mice.
4. Run the engine long enough to completely warm the oil in the crankcase before draining the oil. Remove and replace the oil filter as instructed. Fill the crankcase with fresh oil and run the engine for two to five minutes.
5. Open the drain on the fuel filter and drain the water and sediment before closing. Fill the fuel tank with a premium grade diesel fuel. If this fuel grade has not been used regularly, drain the fuel tank and fill with premium diesel fuel. Run the engine for five minutes to circulate the fuel through the fuel injection system.
6. Clean the air cleaner filter and body.
7. Drain, flush and fill the cooling system with the correct antifreeze mixture to protect the tractor to the lowest anticipated temperature. Add cooling system conditioner and change the coolant filter conditioner.
8. Close the fuel shutoff valve between the fuel filter and fuel tank to prevent fuel draining from fuel injection system into the fuel tank.
9. The batteries do not need to be removed from the tractor, except for extended storage (more than 30 days) below freezing temperatures. The batteries must be fully charged to prevent freezing. Disconnect the negative (-) ground cable at the batteries to prevent possible discharge. Check battery charge every 30 days.
10. Store the tractor where there is protection from light. Clean the tires before storage. Inflate the tires at regular intervals.
11. Coat all exposed cylinder rods with light grease to prevent rust.

PREVIEW - YOUFIXTHIS.COM

Download full manual at youfixthis.com

CHEMICAL TANK MOUNTING

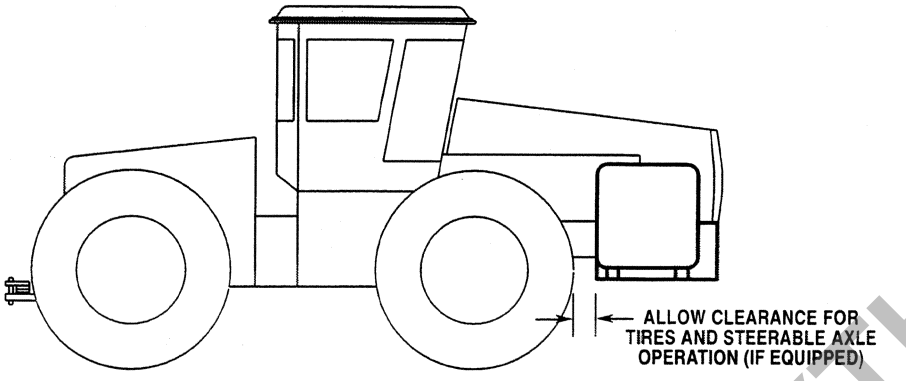

95F62

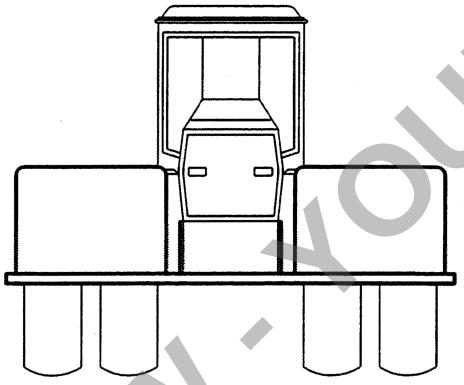

95F63

Chemical tanks can be mounted on each front side of your tractor. The maximum tank capacity for side mounted installation is two (2) 300 gallon (1136 Litre) tanks. Chemical tanks must be installed according to the following instructions.

1. Side mounted chemical tanks must be mounted in pairs with a rigid structure supporting both tanks and mounted to the side and front side of the frame.

IMPORTANT: *The tanks MUST NOT be individually supported by the tractor side frames.*

PREVIEW - YOUFIXTHIS.COM

Download full manual at youfixthis.com

DIGITAL INSTRUMENT CLUSTER

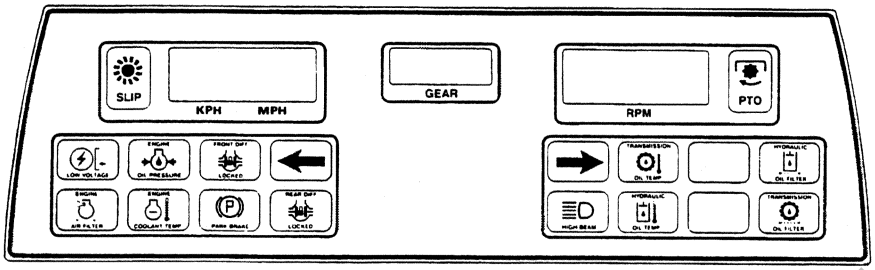

95F41

General Arrangement and Features

The digital instrument cluster (electronic dash) will automatically monitor various operating systems and functions on your tractor. The condition or status of a monitored system will be indicated by readouts on the digital display screens or by indicator lamps. An audible alarm will also sound in conjunction with some indicator lamps or digital displays.

The indicator lamps are located across the lower part of the instrument cluster. The symbols used to identify the various indicators conform to ISO standards. The operation of the individual indicators is described in this section see Indicator Lamps on Page 16.

There are three digital display screens (liquid crystal display) located across the top of the instrument cluster. Information such as ground speed, wheel slip, gear selection, start-up code, system diagnostic codes, engine RPM and PTO RPM will be displayed in digital format. The operation of each display is described in this section, see Digital Display Screens on Page 20.

NOTE: *Tractors equipped with a manual shift transmission will not have a gear display screen.*

Audible Alarm

The digital instrument cluster is equipped with an audible alarm which is activated in conjunction with various system indicator lamps. When activated, the alarm will sound for 2 seconds every 2 minutes or will sound continuously depending on the system being monitored. See Indicator Lamps for more information on alarm operation for specific systems.

Instrument Cluster Calibration

The digital instrument cluster must be calibrated in the tractor in order to provide accurate information. The cluster must be calibrated anytime there has been a change in tire size, transmission controller or true ground speed sensor. See Digital Instrument Cluster Calibration on Page 113 for complete information.

PREVIEW - YOUFIXTHIS.COM

Download full manual at youfixthis.com

ENGINE STARTING PROCEDURE

IMPORTANT: *If equipped, the PTO lever must be in the OFF position for the engine to start. If the starter does not energize, check the PTO lever. Make sure the PTO lever returns to the OFF position anytime the engine is turned off. If adjustment is required, see your dealer.*

STEP 1

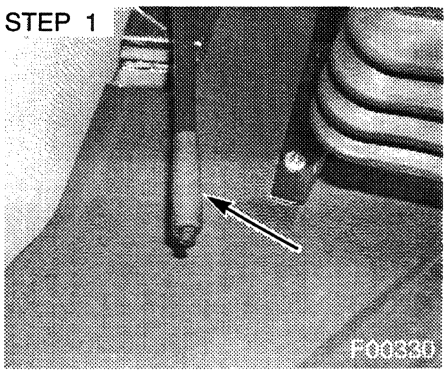

Pull up on the park brake handle to engage the park brake.

STEP 3



Move the throttle lever forward to 1/4 to 1/2 open position.

STEP 2

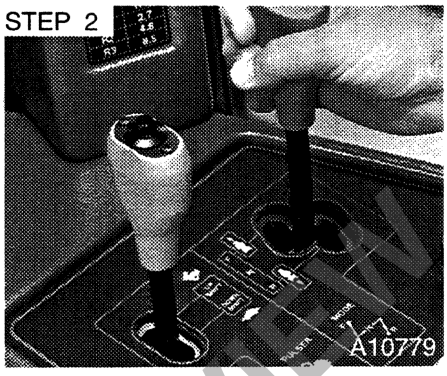

Put the transmission mode or gear shift lever in the NEUTRAL position.

STEP 4

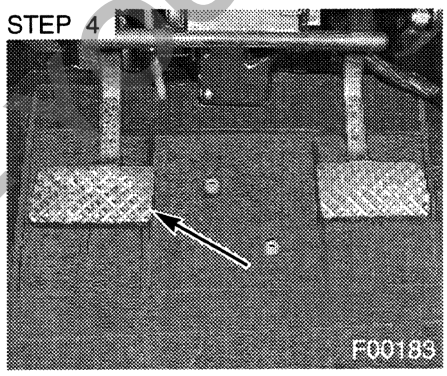

Push the inching pedal down completely.

IMPORTANT: *Engine overspeed will cause engine damage. To avoid overspeeding the engine when transporting heavy implements and/or descending grades at transport speeds, throttle back and reduce engine speed before downshifting. Shift down before descending steep grades to a gear that will allow the engine to control the speed.*

PREVIEW - YOUFIXTHIS.COM

Download full manual at youfixthis.com

ENGINE VALVE AND INJECTOR ADJUSTMENT

Service Interval ..... Every 1500 Hours or Annually

Engine valves and injectors must be correctly adjusted for the engine to operate efficiently. Adjust the valves and injectors at each 1500 hours or annually.

Refer to the Cummins Operation and Maintenance Manual supplied with your tractor for detailed information and procedures to adjust the valves and injectors or contact your dealer.

IMPORTANT: *Engine overspeed will cause engine damage. To avoid overspeeding the engine when transporting heavy implements and/or descending grades at transport speeds, throttle back and reduce engine speed before downshifting. Shift down before descending steep grades to a gear that will allow the engine to control the speed.*

PREVIEW - YOUFIXTHIS.COM

Download full manual at youfixthis.com

REMOVING FROM STORAGE

It is recommended that caution be used when starting an engine that has been in storage.

1. Open the fuel tank shutoff valve. Open the fuel filter drain valve and remove contaminated fuel. Close the drain valve.
2. Check that the grade of oil in the engine crankcase is as specified in this Manual.
3. Check the coolant level in the radiator.
4. Check that the batteries are fully charged. Connect the ground cables and tighten all terminals.
5. Check the brake fluid level and linkage.
6. Check the tension on all belts.

> **WARNING:** *Before starting the engine, be sure all operating controls are in neutral and the park brake applied. This will eliminate accidental movement of the machine on start-up of power driven equipment.* M296A

7. Do not accelerate the engine rapidly, or operate at high RPM immediately after starting.
8. Inflate the tires to the correct operating pressures.
9. Make sure that all shields are in proper position.

PREVIEW - YOUFIXTHIS.COM

Download full manual at youfixthis.com

2. Holes may be drilled in the side frame for mounting the supporting structure. Care must be used to avoid interference with any components mounted on the inside of the frame and at least 2 inch (50.8 mm) from the edge of the side frame. When possible use existing holes in the front side of the frame for mounting.

NOTE: *The lower flange of the side frames may also be drilled for mounting if needed.*

3. Chemical tanks must be mounted as close to the front axle as possible. Front wheel tread setting is not affected by side tank installation, however the shape and/or size of the tanks can be affected by the required clearance ahead of the tires.

IMPORTANT: *If equipped with steerable front axle, clearance must be allowed for steering motion or, the tractor must be operated in the articulation only steering mode.*

4. Refer to Tire and Load Capacity Information on Page 122 through 126 in this manual for the correct tire size and load capacity rating for your application. Tires must be inflated to the correct load capacity to support the added weight. To avoid exceeding tire and load capacity, remove all front ballast.

NOTE: *The load ratings for tires can be increased 20 percent for R1 tires for speeds up to 10 MPH (16 Kph).*

5. Each gallon (3.8 Litre) of tank capacity will add approximately 14 lb (6.3 Kg) to the front axle weight and decrease rear axle weight approximately 4 lb (1.8 Kg). Add rear end weight or liquid ballast in the rear tires for balance and stability as required to avoid exceeding a 70 percent front axle and 30 percent rear axle weight split. Add no more ballast than necessary and remove ballast when no longer needed.

IMPORTANT: *Tanks filled to capacity will distribute excessive weight to the front axle and must not be used as primary ballast for heavy tillage operations.*

WARNING: *Additional care must be taken when operating a tractor with chemical tanks. Operating, handling and braking performance of the tractor may be affected. Avoid high speed operation. Travel speed should be such that complete control and machine stability is maintained at all times.*
M418

PREVIEW - YOUFIXTHIS.COM

Download full manual at youfixthis.com

Indicator Lamps

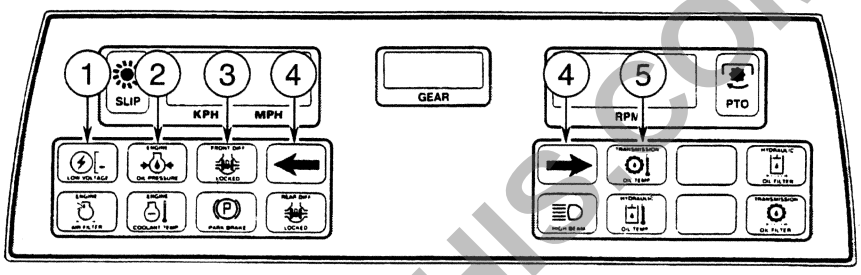

95F41

The condition or status of a monitored system is indicated by indicator lamps located on the lower part of the digital instrument cluster.

1. LOW VOLTAGE INDICATOR

   At 10.5 volts with engine speed above 1700 RPM the following will occur.

   A. Red indicator will illuminate.

   B. Alarm will sound for 2 seconds every 2 minutes.

NOTE: *If the tractor is equipped with a powershift transmission, the tractor can be operated ONLY until it can be stopped in a safe area to find and correct the problem. Continued operation will cause the tractor to become inoperative.*

   At 9.5 volts with engine speed below 1700 RPM the following will also occur.

   A. Transmission will shift to neutral.

   B. Alarm will sound for 2 seconds every 2 minutes.

   C. Transmission diagnostic code E1.0 will be displayed on the center digital display screen instead of the transmission gear.

   The tractor will be inoperative until the voltage load is reduced and/or the cause of the low voltage is corrected.

PREVIEW - YOUFIXTHIS.COM

Download full manual at youfixthis.com

STOPPING THE ENGINE

IMPORTANT: *When stopping the engine after operating under heavy load, run the engine at idle speed for a short period of time. This will permit the engine and turbocharger temperature to decrease gradually.*

STEP 1

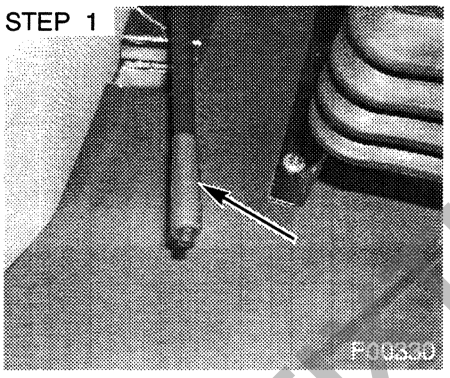

Slow the engine, put all controls in the NEUTRAL position. Pull up on the park brake control handle to apply the park brake.

STEP 2

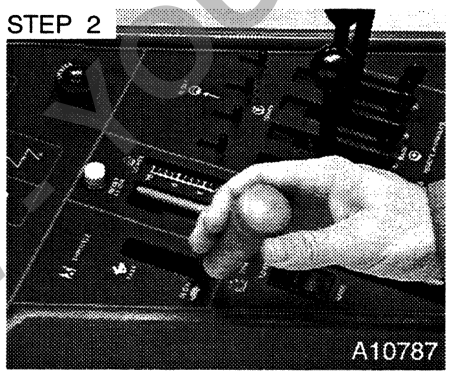

Move the throttle lever rearward to run the engine at idle speed for three to five minutes to decrease the temperature of the engine and turbocharger.

STEP 3

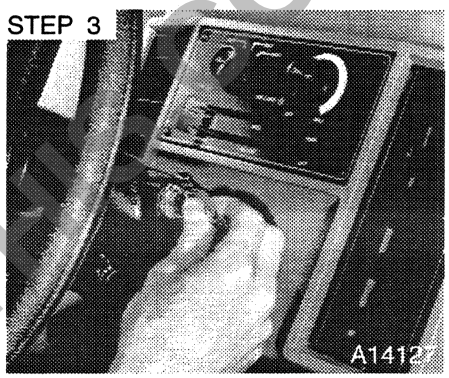

Turn the key switch counterclockwise to the OFF position. Push down on the switch key release lever to the LOCK position to remove the key.

WARNING: *Before leaving the tractor, stop the engine, put all controls in neutral, engage the park brake and remove the key from the key switch.*

M301A

PREVIEW - YOUFIXTHIS.COM

Download full manual at youfixthis.com

TRACTOR DIAGNOSTIC CODES

The transmission controller monitors the operation of the transmission and certain other tractor systems. When a malfunction is detected in a monitored system, a code will be displayed on the gear LCD display screen on the digital instrument cluster.

The diagnostic code will consist of the letter E and a two digit number. The E and two digit number will flash alternately on the gear display screen as shown in the following examples.

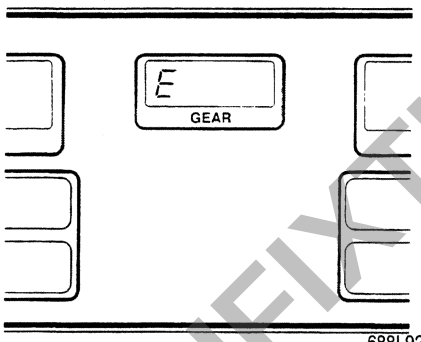

688L92

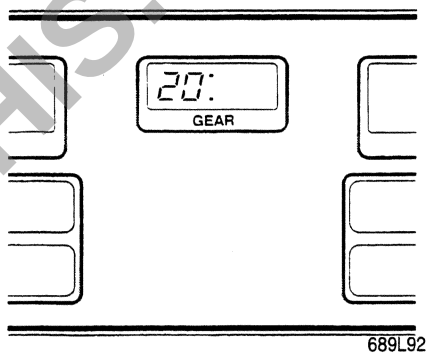

689L92

The diagnostic codes are described as follows:

E10 Indicates low system voltage (less than 9.5 volts). Check battery charge condition (recharge if necessary), check battery cable connections, alternator drive belt or charging system and/or reduce applied system load. When he code is displayed the low voltage warning lamp should be illuminated. If the problem cannot be corrected, contact your dealer.

NOTE: *Alarm will sound for 2 seconds every 2 minutes.*

E20 Transmission shift solenoid "Z" has open circuit. Check transmission control wire harness and/or connector at the transmission end. If the fault cannot be corrected, contact your dealer.

NOTE: *E20 through E28 error codes can also be caused by a faulty circuit breaker.*

E21 Transmission shift solenoid "Y" has open circuit. Check transmission control wire harness and/or connector at the transmission. If the fault cannot be corrected, contact your dealer.

PREVIEW - YOUFIXTHIS.COM

Download full manual at youfixthis.com

PREVIEW ONLY

You're viewing 12 of 257 pages

The full manual includes:

- All 257 pages, complete
- Searchable PDF (find any keyword)
- No watermarks
- Instant download
- Print-ready quality

GET FULL MANUAL NOW

Case 9350 Operator Manual

Scan or click anywhere
youfixthis.com

Click anywhere on this page to get the full manual