Taper Lock Hub

How It Works

The taper lock hub is a mechanism designed to lock rotating parts, such as pulleys and sprockets, to the rotating shaft without the need of a press fit. This allows the parts to be separated more easily.

Removal and Installation

1. If removing the pulley or taper lock only and not moving the shaft, measure position as shown. If replacing bearing and/or shaft, measure end of shaft from end frame after taper lock and pulley have been removed before undoing lock collars.

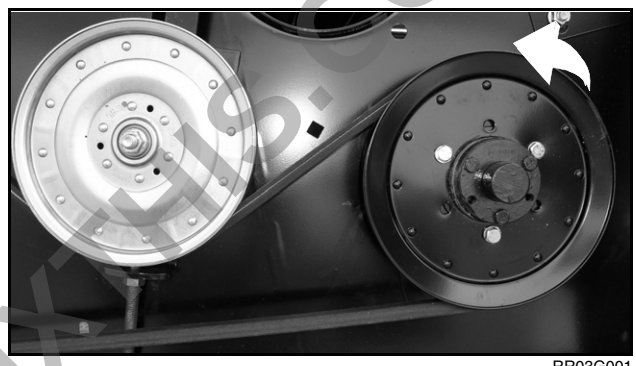

RR03G001

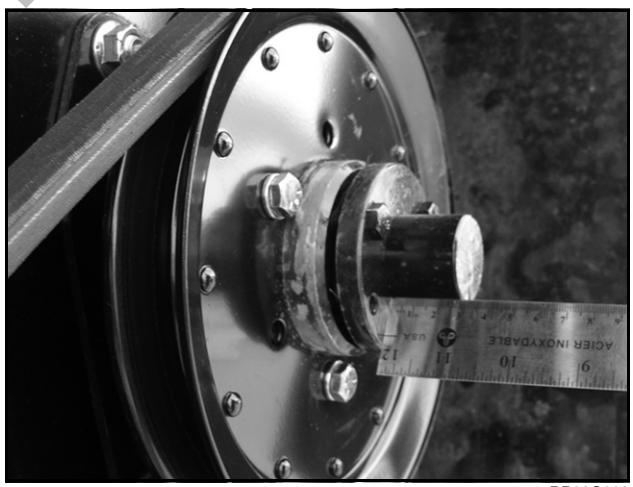

RR03G002

2. Remove three bolts (1).

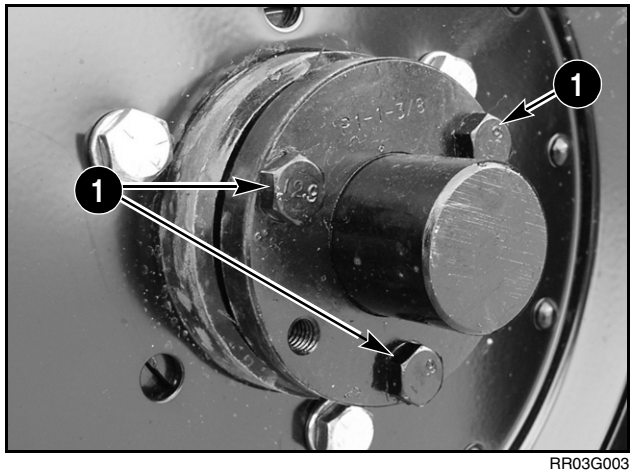

RR03G003

PREVIEW - YOUFIXTHIS.COM

Download full manual at youfixthis.com

Lighting

How It Works

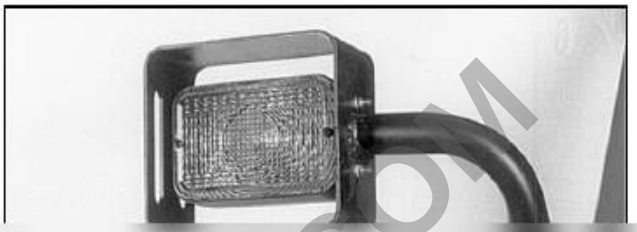

The Header is equipped with road transport warning lamps that operate the same as similar lamps on the Combine lighting system. To adapt these lamps to the Combine lighting system, there are adapters to correspond with the particular Combine

Blurred on purpose. The manual you buy has this page in full quality.

PREVIEW - YOUFIXTHIS.COM

Download full manual at youfixthis.com

TABLE OF CONTENTS

GENERAL INFORMATION 9

STANDARD BOLT TORQUE 9
- U.S. Standard 9
- Metric 10
- Metric Torque for Aluminum Components 10

HYDRAULIC FITTINGS 11
- Steel Hydraulic Fittings 11

PRODUCT IDENTIFICATION NUMBERS 12

ENVIRONMENT 12

PLASTIC AND RESIN PARTS 12

LEFT DRIVE SHIELD 13

MAXIMUM OPENING FOR RIGHT END DELIVERY 13

LUBRICATION AND MAINTENANCE CHART 14

GENERAL SAFETY INFORMATION 15
- Safety Rules 15
- Service Area, Fire Extinguisher, First Aid Kit 16
- Personal Safety 17
- Combine Ballast 18
- Transportation Safety 19
- Tire Safety 20
- Maintenance Safety 21
- Driveshaft Safety 22

COMBINE FEEDER SAFETY LOCK 23

REEL SAFETY LOCK 24
- Fire or Explosion Prevention 24

TROUBLESHOOTING 25

GENERAL PROCEDURES 41
- Taper Lock Hub 41
  - How It Works 41
  - Removal and Installation 41
- Lock Collar 43
  - How It Works 43
  - Removal and Installation 43
- Universal Joint 45
  - How It Works 45
  - Rebuilding the Universal Joint 45
- Guards 49
  - How It Works 49
- Guard Adjustment 50
  - Regular Guard 50
  - Stub Guard 50

PREVIEW - YOUFIXTHIS.COM

Download full manual at youfixthis.com

GENERAL SAFETY INFORMATION

Understand that your safety and the safety of other persons is measured by how you service and operate this machine. Know the positions and operations of all controls before you try to operate. MAKE SURE YOU CHECK ALL CONTROLS IN A SAFE AREA BEFORE STARTING YOUR WORK.

Make sure you understand all the controls of the machine. Refer to Operator's Manual. All equipment has a limit.

CNH America LLC is continuing to work for your safety: by making machines with better protection and by giving these rules for safe operation and servicing the machine.



*THIS SAFETY ALERT SYMBOL INDICATES IMPORTANT SAFETY MESSAGES IN THIS MANUAL. WHEN YOU SEE THIS SYMBOL, CAREFULLY READ THE MESSAGE THAT FOLLOWS AND BE ALERT TO THE POSSIBILITY OF DEATH OR SERIOUS INJURY.*M171C

Safety Rules

- Always shut OFF engine, remove the key and engage feeder safety lock in position on lift cylinder before working under Header or feeder. Failure to engage feeder safety lock may cause injury or death. M184D
- Never connect the reel fore/aft hydraulic couplers on the Header to each other. This would complete the circuit and allow the reel to slide unexpectedly. M209B
- Never make adjustments when Header or machine is running. R208B
- Never operate the machine with shields removed. M423
- ALWAYS make sure working area is clear of other persons before you start operating this machine. NEVER allow anybody in work area during machine operation or servicing.
- Always wear safety glasses when using a drill, hammer, saw, or other tools that may cause chips to fly. M428
- Replace all covers or guards after servicing or cleaning the machine. NEVER operate the machine with covers or guards removed. Serious injury or death can result. CM115A
- Do Not modify the machine. Unauthorized modifications may cause operational malfunction or safety hazard.
- ALWAYS make sure working area is clear of other persons, pets, tools, etc. before you start operating this machine. NEVER allow anybody in work area during machine operation.
- ALWAYS sound horn before starting the Combine.
- Keep service area clean and dry. Wet or oily floors are slippery. Wet areas can be dangerous when working with electrical equipment. Be sure all electrical outlets and tools are properly grounded.
- ALWAYS disconnect the battery (both terminals) before welding on any part of the machine. Failure to do so may cause damage to sensitive electrical components. M866
- Keep work areas organized and clean. Wipe up oil or spills of any kind. Keep tools and parts off of the floor. Eliminate the possibility of a fall which could result in a serious injury. M429
- After installation or servicing, make sure all tools and any equipment used during installation or service are removed from the machine. M430A

PREVIEW - YOUFIXTHIS.COM

Download full manual at youfixthis.com

KNIFE DRIVE SYSTEM 51
Knife Drive System - How It Works 51
Combine Output Shaft Speeds 51
Knife Drive Input Shaft 52
How It Works 52
Bearing Replacement 52
Drive Belt and Idler Tensioner 55
How It Works 55
Removal Alignment and Tensioning 55
Knife Drive Wobble Box 56
How It Works 56
Rebuilding Wobble Box Tools 59
Kit Contents 59
Wobble Box Removal 60
Wobble Box Disassembly 61
Wobble Box Reassembly 67
Wobble Box Installation 79

DRAPER DRIVE SYSTEM 81
Drive System 81
How It Works 81
Combine Adapter Hydraulic Schematics 82
Drapers 84
How It Works 84
Draper Design 84
Installing Drapers 85
Draper Rollers 85
How It Works 85
Hydraulic Draper Motor 85
Draper Drive Assembly 86
Drive Roller Bearing Replacement 87
Idler Roller Bearing Replacement 91
Feed Draper Rollers 94
How It Works 94
Feed Draper Roller Assembly 94
Feed Draper Drive Roller Bearing Replacement 95
Feed Draper Idler Roller Bearing Replacement 98
Draper Tensioning 103
How It Works 103
Draper Tensioning System Repair 104
Feed Draper Deck 106
How It Works 106
Feed Deck Options 106
Widths 106
Feed Draper Deck Removal 107
Prior to Combine Adapter P.I.N. CCC0016651 107
Combine Adapter P.I.N. CCC0016651 and After 111
Retractable Tine Drum (RTD) 114
How It Works 114
Tine Repair 114
Tine Pitch 116
Retractable Tine Drum (RTD) Repair 117
Removing and Repairing the Retracting Tine Drum (RTD) 118
Repositioning the Retracting Tine Drum (RTD) 120

PREVIEW - YOUFIXTHIS.COM

Download full manual at youfixthis.com

12. Remove retaining rings (1) which retain the bronze yoke bushings (2).

13. Tap out the pivot pins (3), using a hammer and a brass punch, push bushing (2) as far as possible (approximately 1/2 way out). Repeat at opposite side.

14. Remove one of the bushings completely. Discard bushing. **Take care not to damage pivot pin or yoke.**

15. Separate the output shaft (4) from the input shaft assembly. Remove second bushing from yoke using socket and brass punch.

16. Remove bearing cone and cup (5) from the input shaft.

17. Remove spacer ring (6), wrap the input shaft threads with adhesive tape to prevent damage. Remove the O-ring (7) and bearing cup and cone (8).

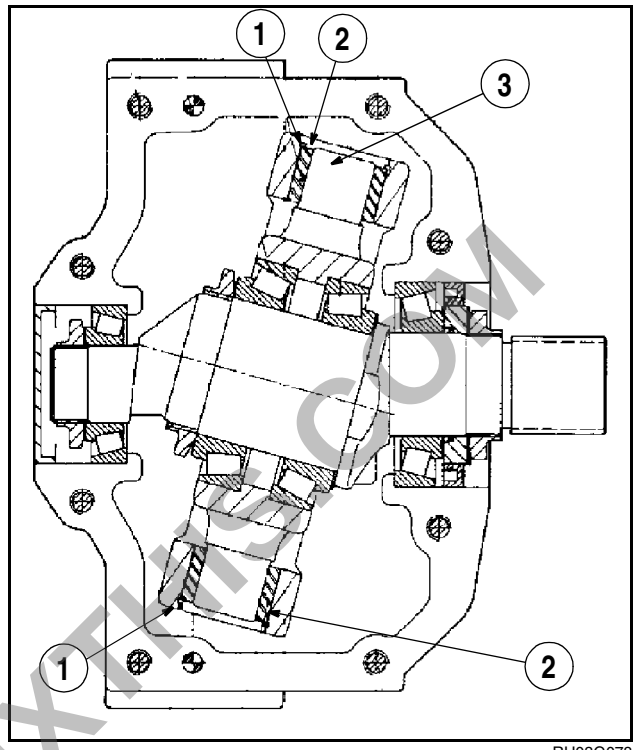

RH03G078

Illustrations continue on Next Page

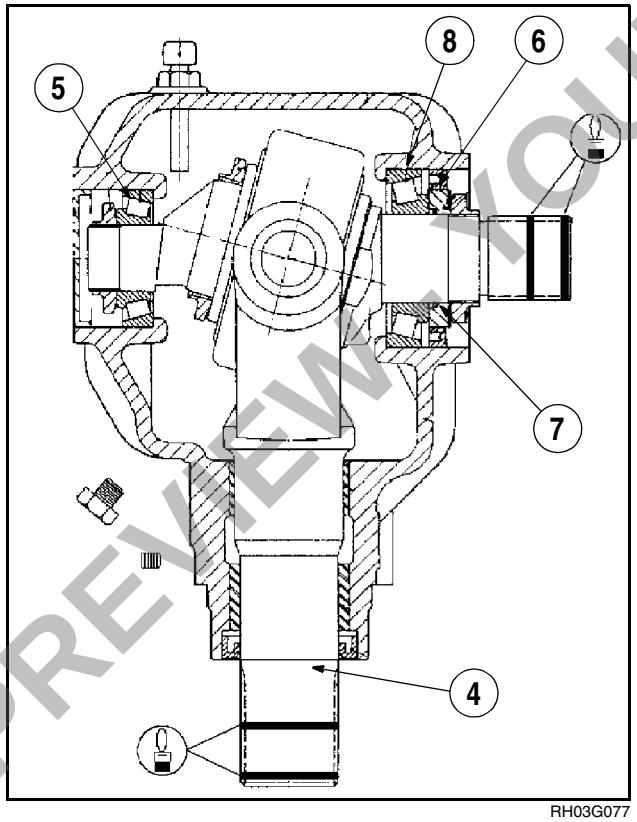

RH03G077

PREVIEW YOUFIXTHIS.COM

Download full manual at youfixthis.com

7. Tap the roller on the ground again until the bearing is dislodged enough to remove by hand. After the bearing is removed, the seal can also be removed.

NOTE: *Both sides of the idler roller are the same, so the previous procedure can be used to dislodge the other bearing and seals.*

8. When reassembling the idler roller, be sure the inner shaft is centered in the roller. This is achieved when the outer seal on both sides of the roller are flush with the ends of the roller tube.

NOTE: *Be sure the seals are installed with the "**front side" (the side with the lettering) facing outwards**. The front side and backside of the seals are shown.*



RR03G091

REMOVE SECOND SEAL AND BEARING

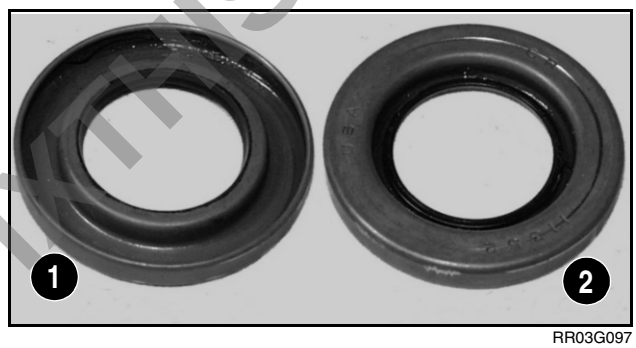

RR03G097

1. BACK SIDE OF SEAL
2. FRONT SIDE OF SEAL

SEAL ORIENTATION

9. When reinstalling roller in supports be sure the front grease fitting by the cutter bar is accessible for easy greasing.

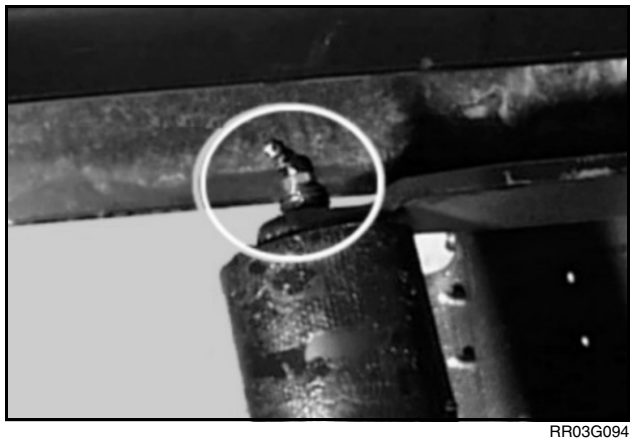

RR03G094

POSITION GREASE FITTING

PREVIEW - YOUFIXTHIS.COM

Download full manual at youfixthis.com

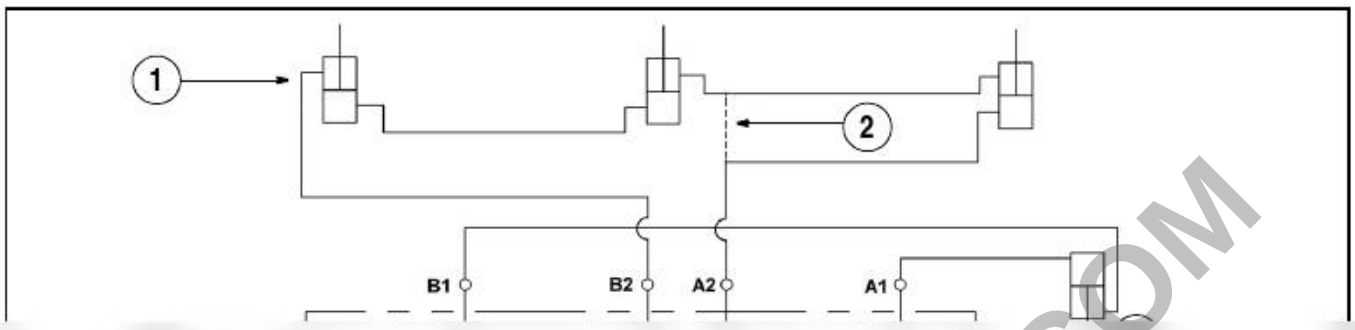

Blurred on purpose. The manual you buy has this page in full quality.

PREVIEW - YOUFIXTHIS.COM

Download full manual at youfixthis.com

22. Apply 3 or 4 drops of LOCTITE® sealant at top of thread for each of four holes in housing. Do no allow parts with LOCTITE® applied to come in contact with any metal parts other than those for assembly. Wipe off excess LOCTITE® from housing face, using a non-petroleum base solvent.

NOTE: *Do not apply LOCTITE® to threads more than 15 minutes before installing screws. If housing stands for more than 15 minutes, repeat application. No additional cleaning or removal of previously applied LOCTITE® is necessary.*

23. Before installing flange and seal assembly over shaft, place protective sleeve or bullet over shaft. Then lubricate space between exclusion seal and pressure seal, as well as lips of both seals. See Figure 14.

24. Install flange. Rotate flange slowly while pushing DOWN over shaft. Be careful not to invert or damage seals.

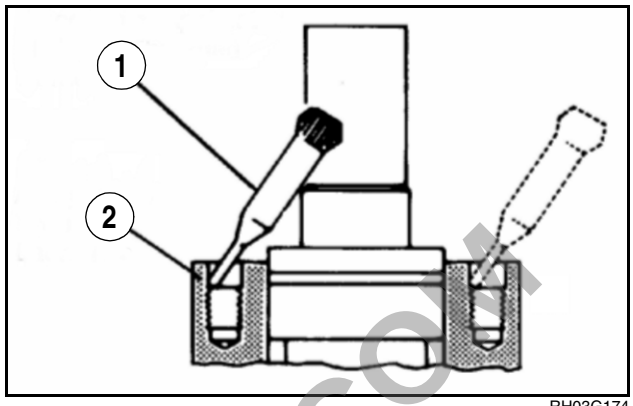

RH03G174

LOCTITE® APPLICATION

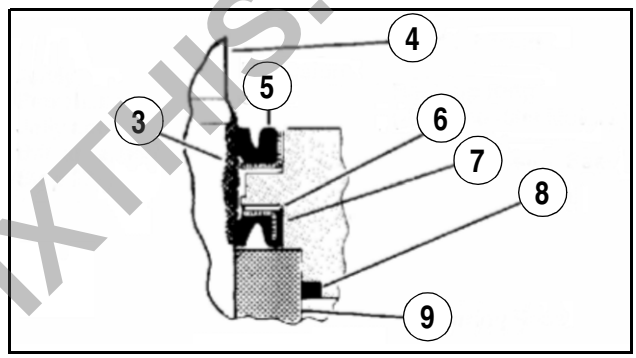

RH03G209

1. TIP OF APPLICATOR AT TOP OF THREADED PORTION
2. APPLY 3 OR 4 DROPS IN EACH HOLE
3. APPLY PETROLEUM JELLY
4. OUTPUT SHAFT
5. EXCLUSION SEAL
6. BACKUP RING
7. PRESSURE SEAL
8. SEAL
9. BEARING RACE

FLANGE AND SEAL ASSEMBLY

PREVIEW - YOUFIXTHIS.COM

Download full manual at youfixthis.com

Reassembly

1. With the seals installed and damaged components replaced the pump can now be reassembled. Place the drive shaft of the inner pump through the opening of the front cover until the bottom of the balancing plate sits flush against the front cover. Slide the pump body DOWN over the top of the balancing plate.

IMPORTANT: *Make sure that all of the reference marks, which where made in the disassembly process line up. This will ensure that all the components are reassembled correctly.*



RR03G198

ASSEMBLE INNER PUMP

2. With the inner pump reassembled the spacer plate and the small pump to pump connecting shaft can be installed.

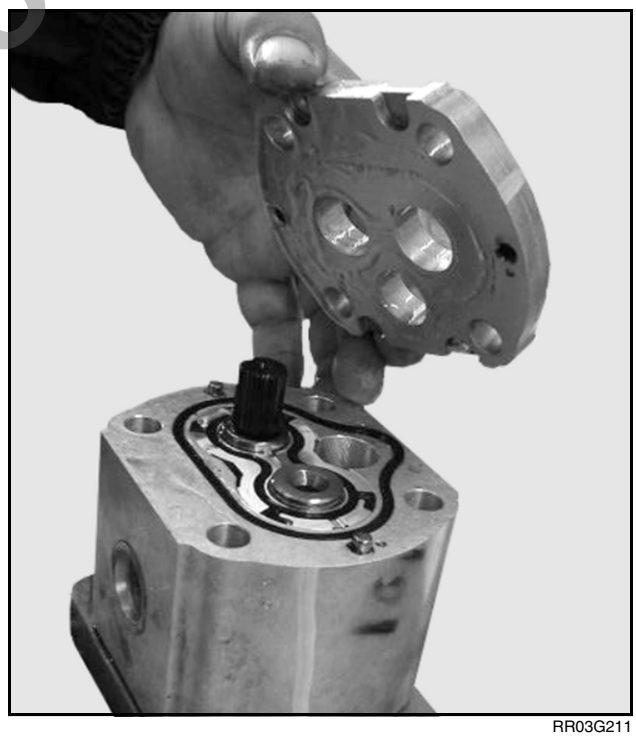

RR03G211

INSTALL SPACER PLATE

PREVIEW - YOUFIXTHIS.COM

Download full manual at youfixthis.com

Knife Drive Input Shaft

How It Works

The knife drive input shaft is simply a long shaft used to bring the power from the Combine driveshaft to the end of the Header to turn the belt for the wobble box.

There are a few bearings along the shaft that may wear with time and use.

Bearing Replacement

1. Remove taper lock hub and pulley. Refer to Taper Lock Hub in the General Procedures Section of this manual.
2. Remove Bearing Lock Collar. Refer to Lock Collar in the General Procedures Section of this manual.
3. Loosen, but **Do Not remove**, the two nuts at location “A“.
4. Remove the three bolts at location “B”.
5. Polish shaft with emery cloth to assist in bearing removal.

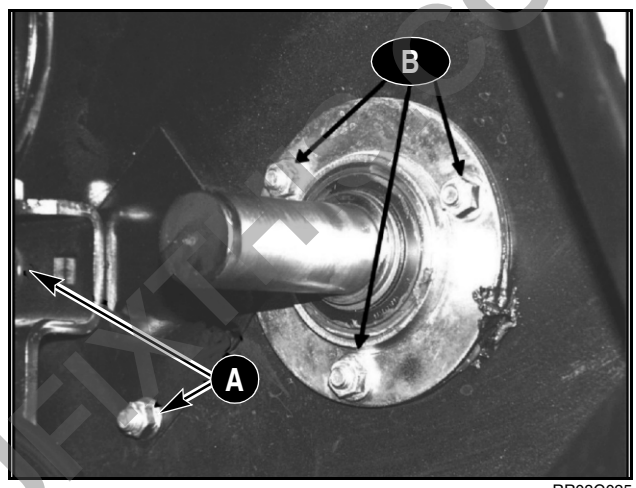

RR03G025

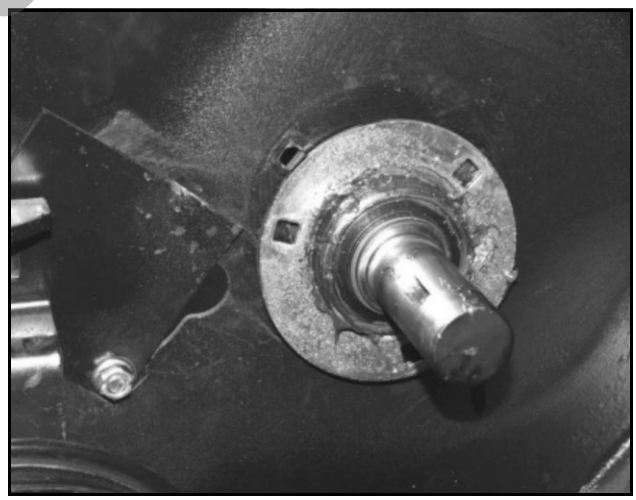
RR03G026

PREVIEW - YOUFIXTHIS.COM

Download full manual at youfixthis.com

13. Tap bearings into position using a shaft slightly smaller than outer tube.

14. Repeat Steps 9 through 12 on the other side of the roller.



RR03G070

TAP BEARING IN POSITION

15. Put roller back into supports (1), tighten nuts and replace grease fittings.

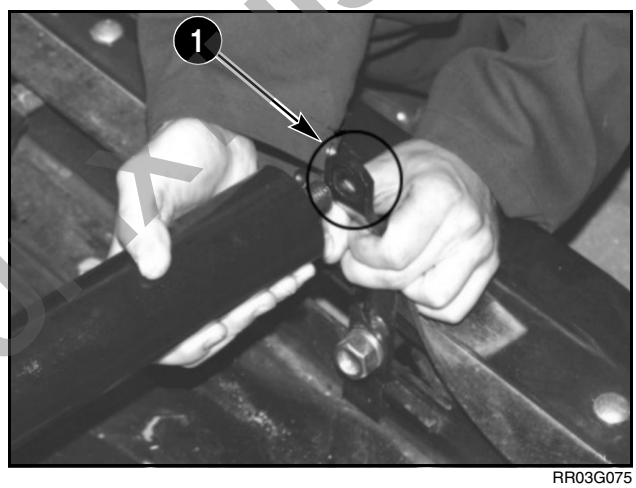

RR03G075

INSTALL ROLLER ON SUPPORT

16. Grease rollers, reinstall drapers. Apply proper tension to the drapers. Refer to Operator's Manual for correct procedure.

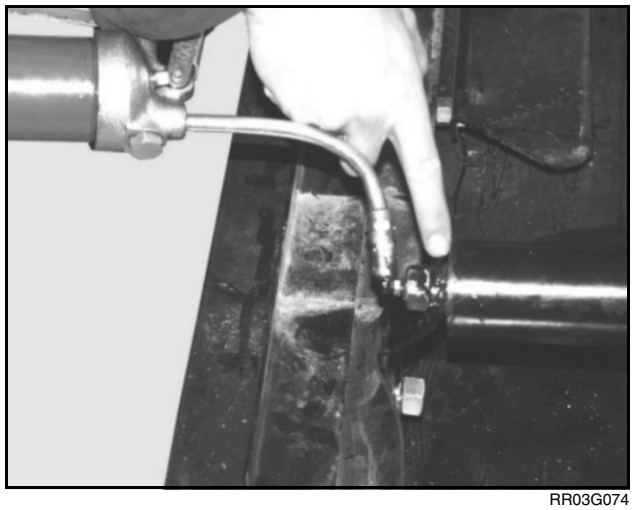

RR03G074

GREASE ROLLERS

PREVIEW - YOUFIXTHIS.COM

Download full manual at youfixthis.com

Reel Drive Motor Removal

Refer to the Hydraulic System Section of this manual for servicing the Reel Drive Hydraulic Motor.

1. Remove reel drive cover retaining bolts (1) and remove the reel drive cover.

NOTE: *30 and 36 Foot Headers with split reel - one of the reels may have to be removed to gain access to the reel drive.*

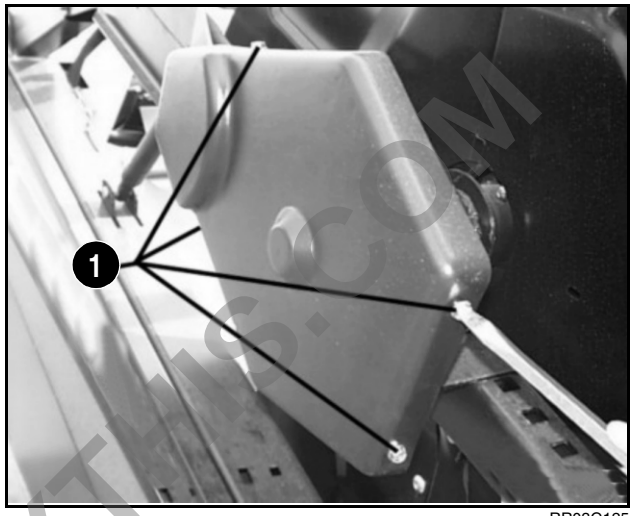

RR03G125

REMOVE REEL DRIVE COVER

2. Remove the retaining bolt and washer from the small drive sprocket on the motor shaft.

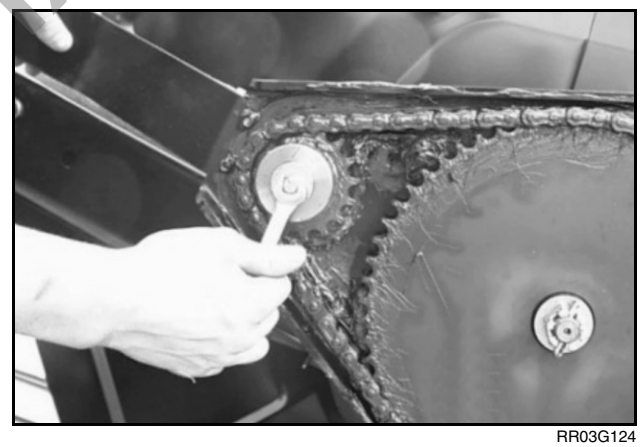

RR03G124

REMOVE BOLT AND WASHER

3. Disconnect the connector link of the chain. Remove the chain.

NOTE: *Sliding the small sprocket along the motor shaft will create enough play to allow chain removal.*

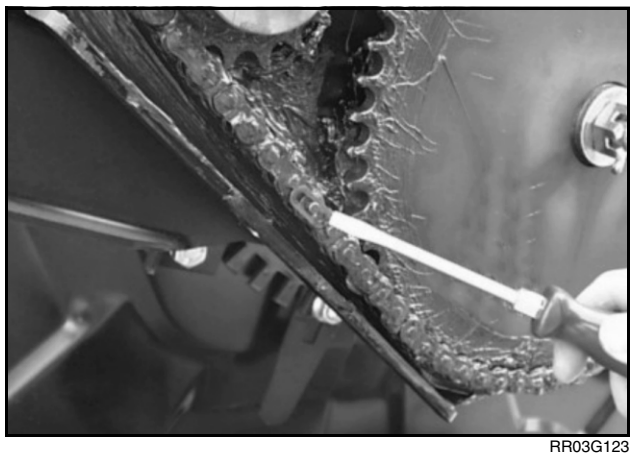

RR03G123

DISCONNECT CONNECTOR LINK

PREVIEW - YOUFIXTHIS.COM

Download full manual at youfixthis.com

Reel Lift Slave Cylinder Repair

Disassembly

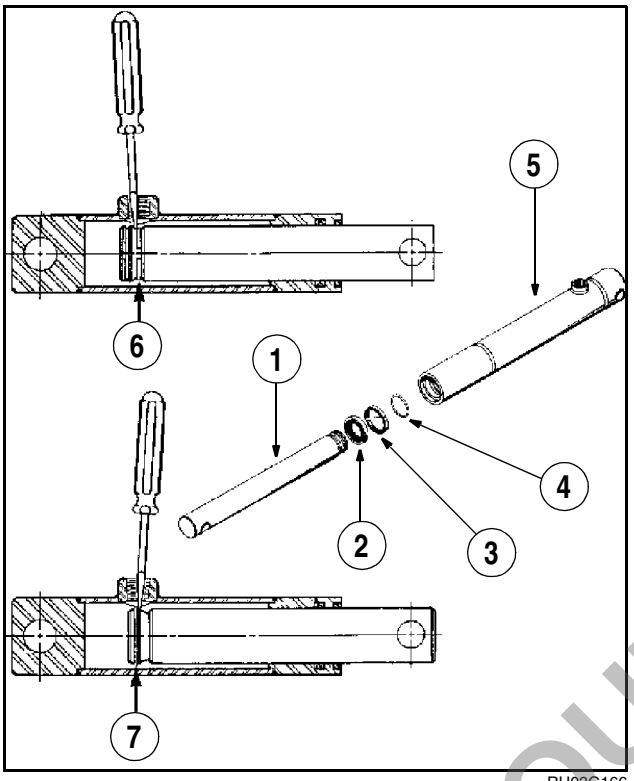

RH03G166

1. ROD ASSEMBLY
2. WIPER SEAL
3. ROD SEAL
4. LOCK RING
5. BARREL ASSEMBLY
6. LOCK RING IN UNLOCKED POSITION
7. LOCK RING IN LOCKED POSITION

REEL LIFT SLAVE CYLINDER

1. Thoroughly clean outside of cylinder assembly.
2. Pull rod (1) out until end of rod and lock ring (4) can be seen through inlet port.
3. Insert screwdriver in inlet port and slide lock ring (4) into deep groove in the rod assembly.
4. Remove rod assembly (1) from barrel assembly (5).
5. Remove wiper seal (2) and seal(s) (3)* from I.D. of barrel assembly.

* Some cylinders use an O-ring and back-up washer in place of a single rod seal.

Inspection

1. It is not necessary to inspect seals (2 or 3) or lock ring (4). These parts should be replaced as new items and are included in the seal repair kit available for this cylinder.
2. Thoroughly clean all parts and remove all nicks and burrs with emery cloth.
3. Inspect bearing I.D. of barrel assembly (5) for excessive wear or scoring.
4. Inspect O.D. of rod (1) for nicks, scratches, or scoring.

Reassembly

1. All parts should be cleaned and dried thoroughly. Metal parts should be lightly oiled prior to assembly.
2. Install new seal (3) in barrel assembly (5). Install new wiper seal (2) in barrel assembly with lip facing outward.

NOTE: *It may be necessary to install wiper seal (2) after rod is installed if rod will not pass through seal.*

3. Use a sleeve to seat seal in groove.
4. Install new lock ring (4) in deep groove of rod end (1).
5. Oil outside of piston rod (1) and carefully insert rod in barrel assembly (5).
6. Push rod into barrel assembly until lock ring area of rod can be seen through port.

NOTE: *By using screwdriver through port, pop lock ring into lock position. Extend rod by hand to full out position to make sure lock ring is locked. Cylinder rod will come out of barrel if lock ring (4) is not installed correctly and cylinder is extended. Cycle cylinder and check for leaks.*

PREVIEW - YOUFIXTHIS.COM

Download full manual at youfixthis.com

9. Remove the coupling shaft by pushing upward on the output end of the shaft and pulling the shaft out of the housing. With the coupling shaft removed pull the thrust bearing and washer from the motor housing and place on a clean workbench.

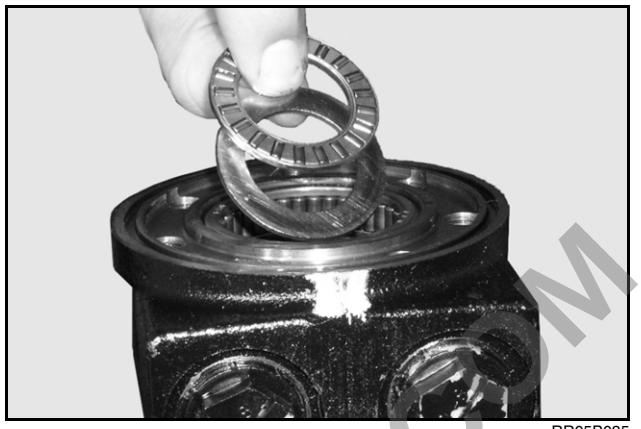

RR05B035

REMOVE THRUST BEARING AND WASHER

10. Remove the seal (1), washer (2) and small backup washer (3) from the housing using a seal pick or small screwdriver. Discard all three components.

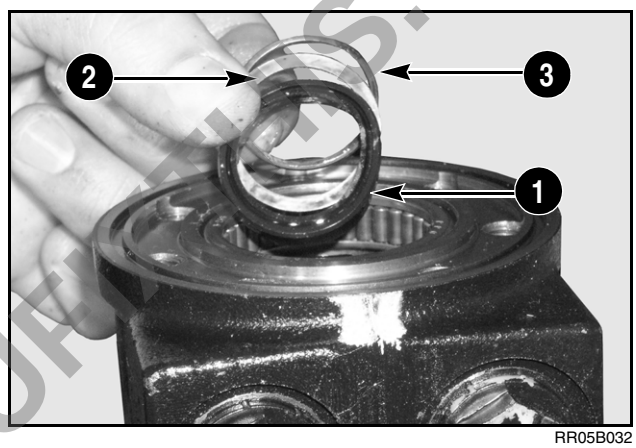

RR05B032

REMOVE SEAL AND BACKUP WASHER

11. With the internal seal and backup washer removed from the motor housing flip the motor upsidedown in the vise so that the shaft end of the housing is pointing up. Using a small screwdriver pry up on the dirt and water seal until it pops out of the housing. Discard this seal.

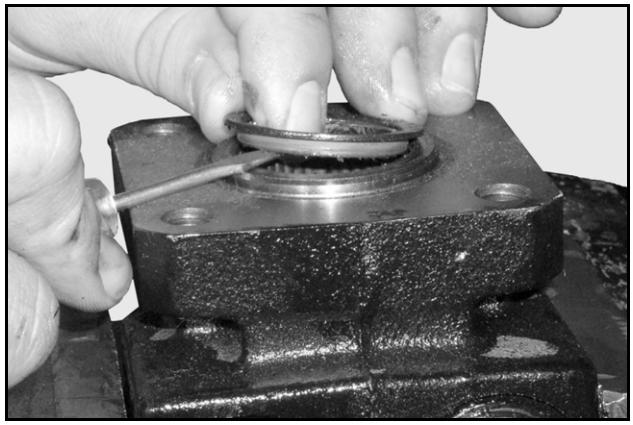

RR05B029

REMOVE DIRT AND WATER SEAL

PREVIEW - YOUFIXTHIS.COM

Download full manual at youfixthis.com

Multi-Link - AFX Combine

How It Works

The purpose of the Multi-Link System is to allow you to hook up the Combine to Adapter with making only one connection. It takes hydraulic oil from one source and use it to run a number of functions. The oil is supplied by the Combine through the multi-link connection and to the valve block on the Header. The valve block directs the oil to is specific destination by use of solenoids controlled by the cab switches.

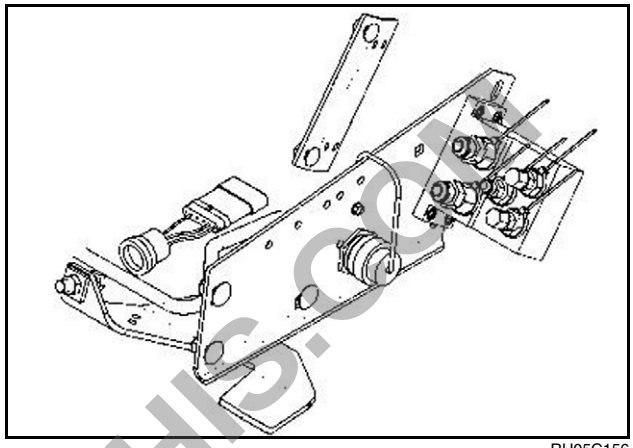

RH05C156

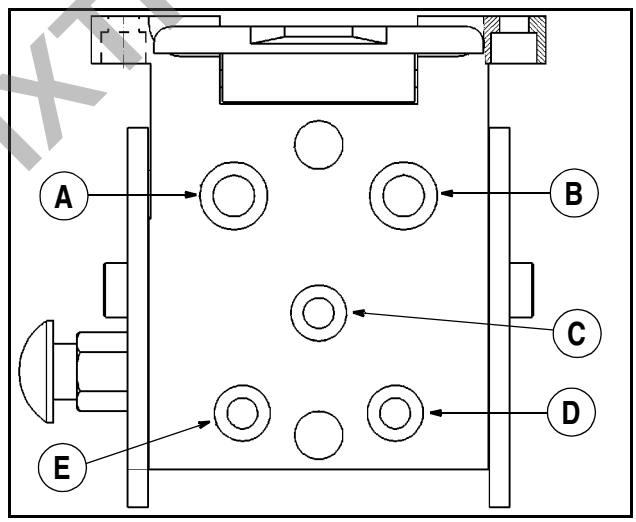

RH05B415

A. REEL DRIVE PRESSURE
B. REEL DRIVE RETURN
C. REEL LIFT
D. REEL FORE - FLIP UP HEADS
E. REEL AFT - FLIP UP HEADS

ASSEMBLY AND HOSE ROUTING

PREVIEW - YOUFIXTHIS.COM

Download full manual at youfixthis.com

3. Disconnect hydraulic lines:

- Reel lift between Header and Combine.
- Reel drive pressure and reel return between Header and Combine.
- Draper return (blue) and draper drive pressure (orange) between Adapter and Header.
- Reel fore/aft - Header Tilt hoses between Header and Combine (if equipped).

4. Remove clevis pin from Adapter float and move handle UP to “float lockout” position. Install pin in hole (2). Install clevis pin and lynch pin. Repeat at other side.

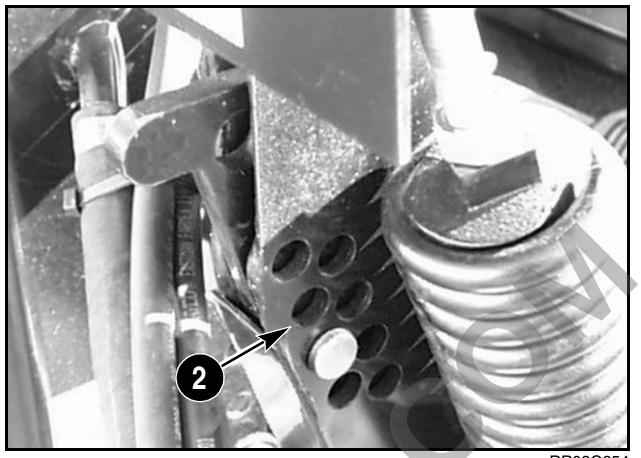

RR03G254

ADAPTER FLOAT - FLOAT LOCKOUT

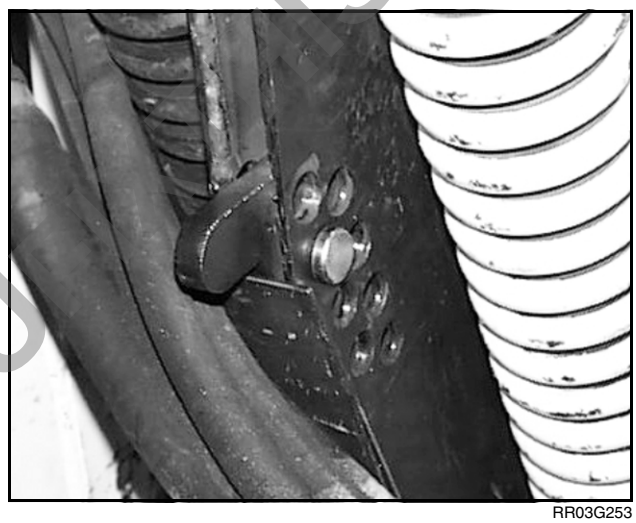

RR03G253

ADPATER FLOAT - FLOAT ENGAGED

PREVIEW - YOUFIXTHIS.COM

Download full manual at youfixthis.com

PREVIEW ONLY

You're viewing 17 of 344 pages

The full manual includes:

- All 344 pages, complete
- Searchable PDF (find any keyword)
- No watermarks
- Instant download
- Print-ready quality

GET FULL MANUAL NOW

Case IH 2042, 2052, 2062 Repair Manual

Scan or click anywhere
youfixthis.com

Click anywhere on this page to get the full manual