Wiring harness - Electrical schematic frame 02 - sheet 02

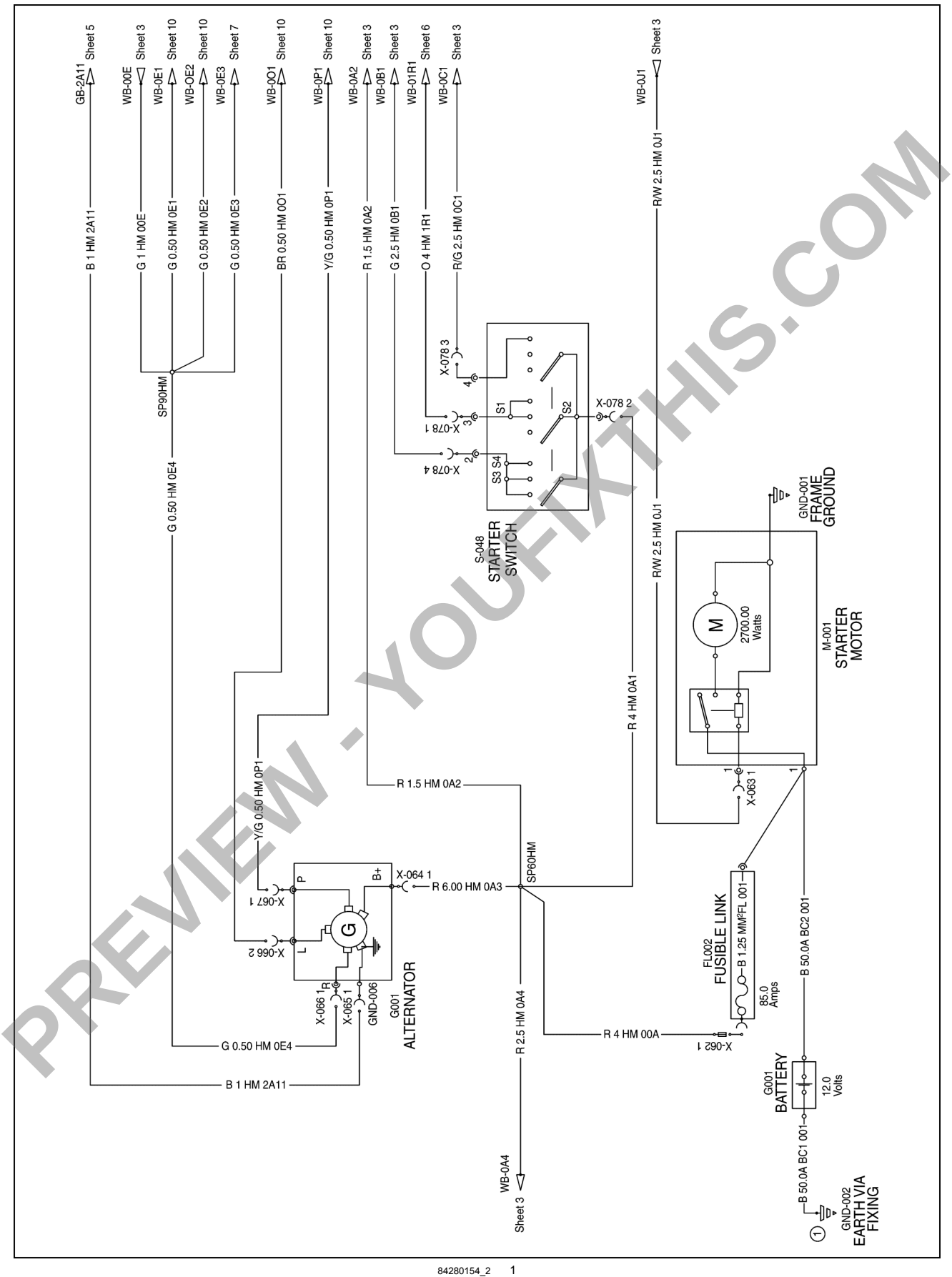

84280154_2 1

PREVIEW - YOUFIXTHIS.COM

Download full manual at youfixthis.com

PRIMARY HYDRAULIC POWER SYSTEM - Hydraulic schema Open center hydraulic circuit and mechanical lift

High pressure pump is directly connected on rear side of engine timing gear. Oil is drawn from transmission case through filter. The pump supplies constant oil flow according to engine speed. High pressure oil enters the control valve located at the front of the lift assembly, which controls the raising and lowering of the lift.

All excess oil flow produced by the hydraulic pump is returned direct to the Gear box through the control valve spool located in the control valve.

Also located within the control valve is the lift cylinder safety valve, which protect the lift cylinder and seals from excessive peaks of pressure during operation.

SCHEMATIC VIEW OF HYDRAULIC SYSTEM

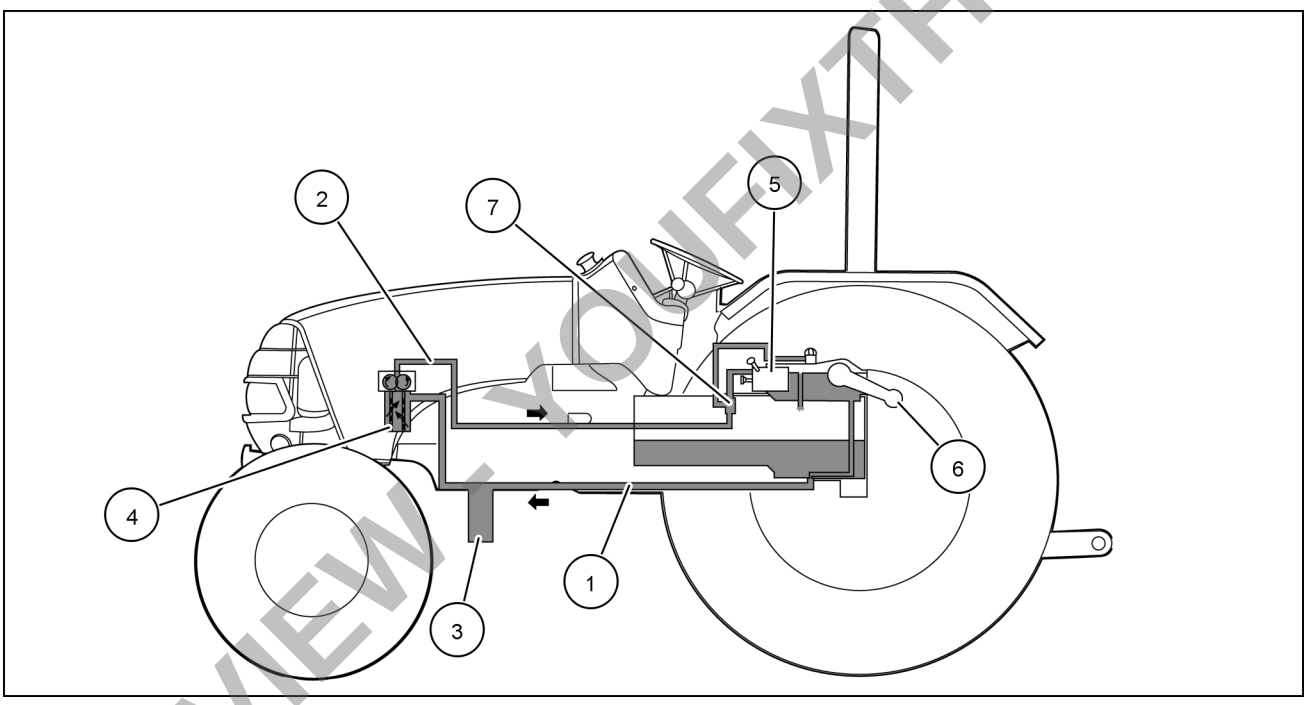

760900750 1

1. Suction line drawing from Transmission housing
2. Delivery line to control valve
3. Oil filter
4. Hydraulic pump
5. Relief valve
6. Lift arm
7. Control valve

PREVIEW - YOUFIXTHIS.COM

Download full manual at youfixthis.com

Torque Specification Tables

Standard Bolt Hardware & Hydraulic Connector Torques, Specifications and Information

This specification establishes general torque values to be used in bolted joints for metric and inch hardware. This specification is assumed to apply unless another specification (standard or specified requirement) is indicated in the repair manual.

NOTE: These Standards do not include electrical or hydraulic components, they are referred to in their specific charts or tables.

INCH 'NON-FLANGED' HARDWARE AND LOCKNUTS {MINIMUM HARDWARE TIGHTENING TORQUES}

IN NEWTON-METERS (FOOT-POUNDS) FOR NORMAL ASSEMBLY APPLICATIONS								
	SAE GRADE 2		SAE GRADE 5		SAE GRADE 8		LOCKNUTS	
Nominal Size	Unplated or Plated Silver	Plated w/ZnCr Gold	Unplated or Plated Silver	Plated w/ZnCr Gold	Unplated or Plated Silver	Plated w/ZnCr Gold	Gr.B w/Gr5 Bolt	Gr.C w/Gr8 Bolt
1/4	6.2 (55)*	8.1 (72)*	9.7 (86)*	13 (112)*	14 (121)*	18 (157)*	8.5 (75)*	12.2 (109)*
5/16	13 (115)*	17 (149)*	20 (178)*	26 (229)*	28 (21)	37 (27)	17.5 (155)*	25 (220)*
3/8	23 (17)	30 (22)	35 (26)	46 (34)	50 (37)	65 (48)	31 (23)	44 (33)
7/16	37 (27)	47 (35)	57 (42)	73 (54)	80 (59)	104 (77)	50 (37)	71 (53)
1/2	57 (42)	73 (54)	87 (64)	113 (83)	123 (91)	159 (117)	76 (56)	108 (80)
9/16	81 (60)	104 (77)	125 (92)	163 (120)	176 (130)	229 (169)	111 (82)	156 (115)
5/8	112 (83)	145 (107)	174 (128)	224 (165)	244 (180)	316 (233)	153 (113)	215 (159)
3/4	198 (146)	256 (189)	306 (226)	397 (293)	432 (319)	560 (413)	271 (200)	383 (282)
7/8	193 (142)	248 (183)	495 (365)	641 (473)	698 (515)	904 (667)	437 (323)	617 (455)
1	289 (213)	373 (275)	742 (547)	960 (708)	1048 (773)	1356 (1000)	654 (483)	924 (681)

NOTE: Torque values shown with * are inch pounds.

NOTICE: *Values shown on these charts are minimum hardware tightening torques unless otherwise stated.*

METRIC 'NON-FLANGED' HARDWARE AND LOCKNUTS {MINIMUM HARDWARE TIGHTENING TORQUES}

IN NEWTON-METERS (FOOT-POUNDS) FOR NORMAL ASSEMBLY APPLICATIONS							
	CLASS 5.8		CLASS 8.8		CLASS 10.9		LOCK-NUTS
Nominal Size	Unplated	Plated w/ZnCr	Unplated	Plated w/ZnCr	Unplated	Plated w/ZnCr	Cl.8 w/Cl8.8 Bolt
M4	1.7 (15)*	2.2 (19)*	2.6 (23)*	3.4 (30)*	3.7 (33)*	4.8 (42)*	2.3 (20)*
M6	5.8 (51)*	7.6 (67)*	8.9 (79)*	12 (102)*	13 (115)*	17 (150)*	7.8 (69)*
M8	14 (124)*	18 (159)*	22 (195)*	28 (21)	31 (23)	40 (30)	19 (169)*
M10	28 (21)	36 (27)	43 (32)	56 (41)	61 (45)	79 (58)	38 (28)
M12	49 (36)	63 (46)	75 (55)	97 (72)	107 (79)	138 (102)	66 (49)
M16	121 (89)	158 (117)	186 (137)	240 (177)	266 (196)	344 (254)	164 (121)
M20	237 (175)	307 (226)	375 (277)	485 (358)	519 (383)	671 (495)	330 (243)
M24	411 (303)	531 (392)	648 (478)	839 (619)	897 (662)	1160 (855)	572 (422)

NOTE: Torque values shown with * are inch pounds.

PREVIEW - YOUFIXTHIS.COM

Download full manual at youfixthis.com

14. Install the cylinder housing, **(1)**, into the hydraulic lift housing.

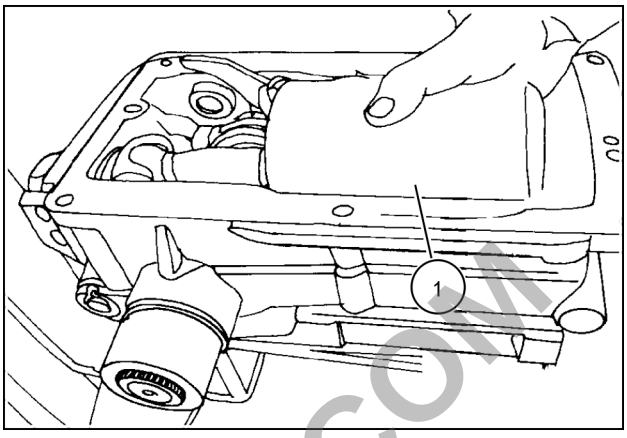

20097474 8

15. Secure the cylinder with the M12 socket head cap screws, **(1)**. Torque the socket head cap screws to **75 N·m** (**55 lb ft**).

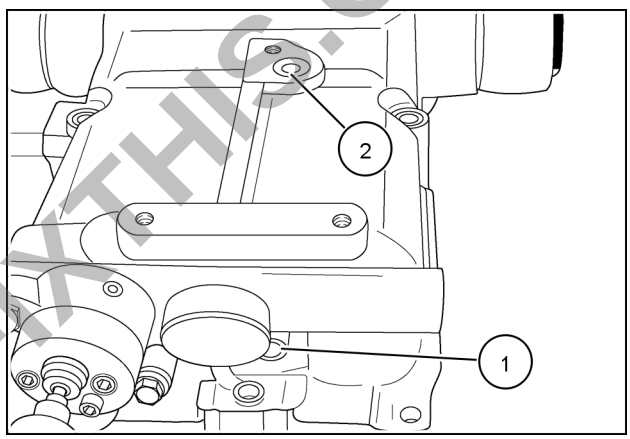

86070603 9

Next operation:
PRIMARY HYDRAULIC POWER SYSTEM - Install Mechanical lift assembly (A.10.A)

PREVIEW - YOUFIXTHIS.COM

Download full manual at youfixthis.com

Wiring harness - Electrical schematic frame 03 - sheet 03

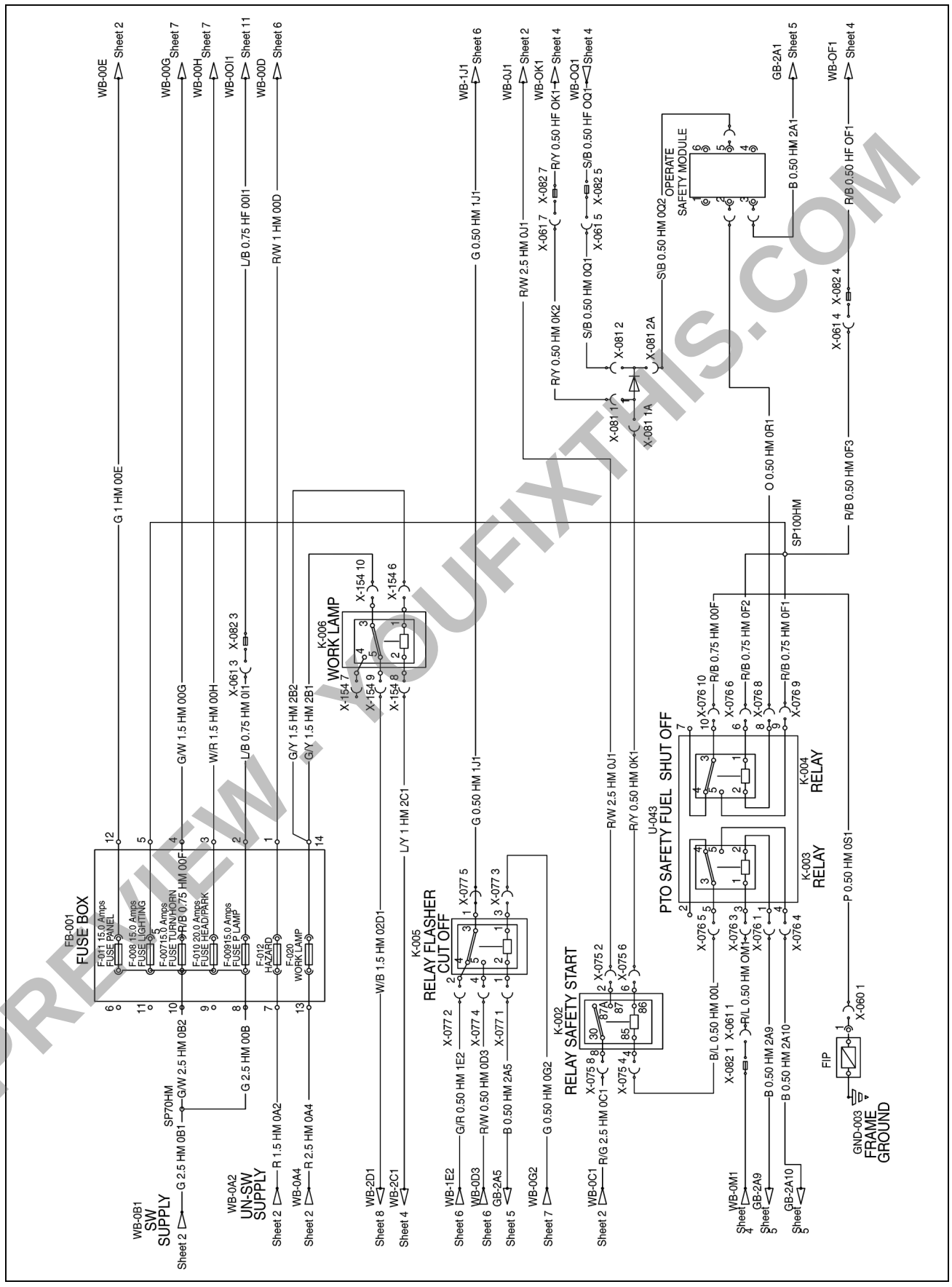

84280154_3 1

Download full manual at youfixthis.com

HYDRAULIC CIRCUIT DIAGRAM

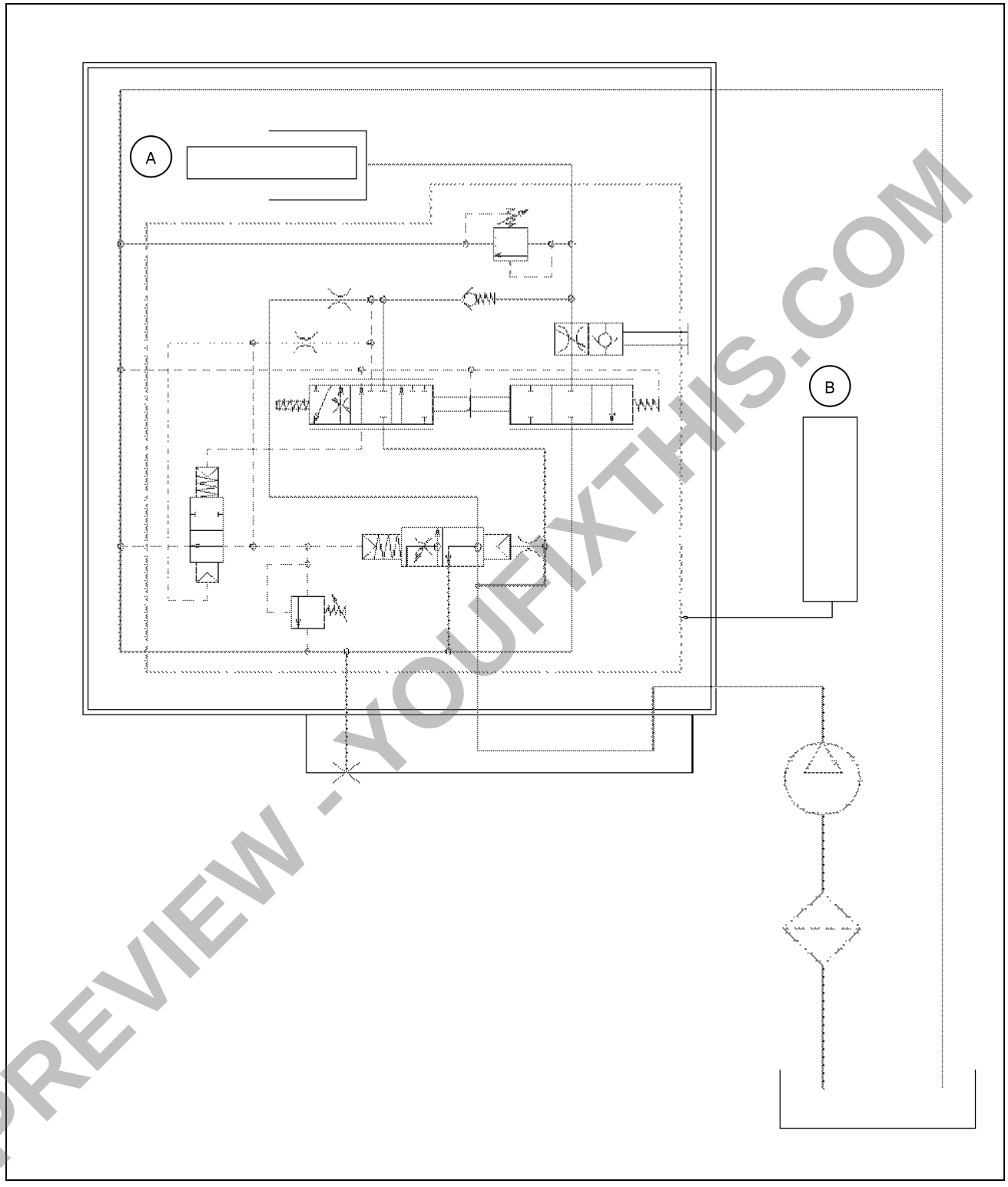

20097463 2

A. Cylinder
B. Control Valve

PREVIEW - YOUFIXTHIS.COM

Download full manual at youfixthis.com

PRIMARY HYDRAULIC POWER SYSTEM - General specification

Type	With separate position control plus float control
Control	Through one independent lever External knob on control valve
Response/drop rate adjustment	Through external knob on control valve
Single-acting cylinder	
Bore and stroke	**85x87.5 mm**
Displacement	**496 cm³**
Pressure regulating valve setting	**17499 - 18002 kPa** (**2538 - 2611 psi**)
Cylinder safety valve setting	**20498 - 21001 kPa** (**2973 - 3046 psi**)
Piston diameter	**84.03 - 84.06 mm** (**3.3083 - 3.3094 in**)
Cylinder bore diameter	**85 - 85.054 mm** (**3.346 - 3.349 in**)
Intervention of automatic hydraulic limit stop	**73 - 74 °**
Internal mechanical limit stop	**76 - 78 °**
Angular excursion of control position lever	**68 °**
Angular excursion of lifting arms in position control	**70 - 72 °**
Cross shaft diameter at the bushings	
Right-hand side	**49.04 - 49.07 mm** (**1.931 - 1.932 in**)
Left-hand side	**44.075 - 44.00 mm** (**1.735 - 1.732 in**)
Shaft end play (with lift arms installed)	**2 mm** (**0.08 in**)
Type	3 - point hitch
Category	I & II
Maximum lifting capacity	**1332 kg** (**2937 lb**)
Maximum lift capacity at standard frame	**925 kg** (**2039 lb**)

PRIMARY HYDRAULIC POWER SYSTEM - Torque

Description	Thread size	Torque
Bolts, lift to housing **(C1)**	M10 x 1.5	**50 N·m** (**37 lb ft**)
Bolts, Distributor to lift housing **(C2)**	M8 x 1.25	**30 N·m** (**22 lb ft**)
Banjo Bolt, Delivery pipe to Distributor **(C3)**	M18 x 1.5	**10 N·m** (**89 lb in**)
Allen screw, Hydraulic cylinder to lift housing **(C4)**	M12 and M14 x 1.25	**75 N·m** (**55 lb ft**)
Bolts, top link support **(C5)**	M8 x 1.25	**50 N·m** (**37 lb ft**)

PREVIEW - YOUFIXTHIS.COM

Download full manual at youfixthis.com

PRIMARY HYDRAULIC POWER SYSTEM - Assemble Lift arm shaft

Prior operation:
PRIMARY HYDRAULIC POWER SYSTEM - Inspect Lift arm shaft (A.10.A)

1. Install the shaft, **(1)**, into the housing.
2. Engage the shaft into the crank, **(2)**, and into the other side of the housing.
3. While installing the shaft, make sure to align the hole, **(3)**, in the shaft with the hole, **(4)**, in the crank.

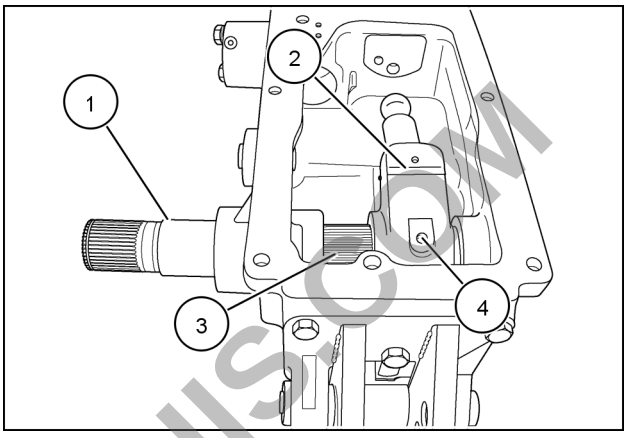

86070611 1

4. Install and secure the locking screw, **(1)**, into the crank.

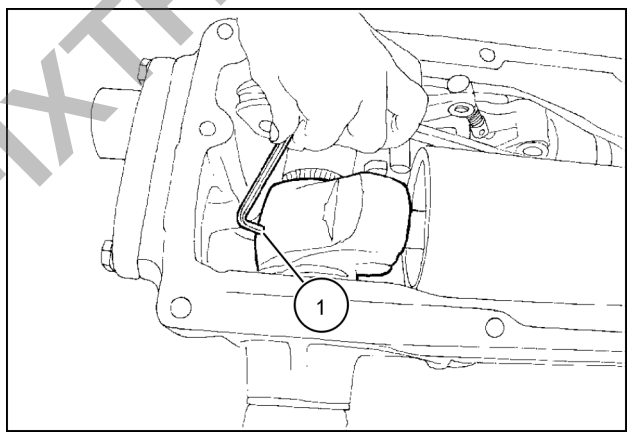

20097469 2

5. Install the seals, **(1)**, into the housing using a suitable seal installer.

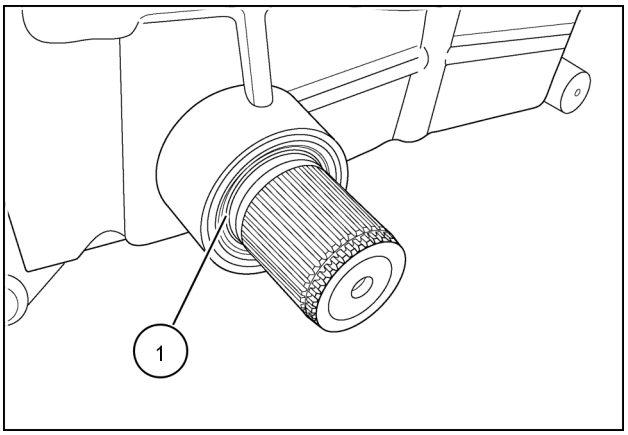

86070612 3

PREVIEW - YOUFIXTHIS.COM

Download full manual at youfixthis.com

Wiring harness - Electrical schematic frame 04 - sheet 04

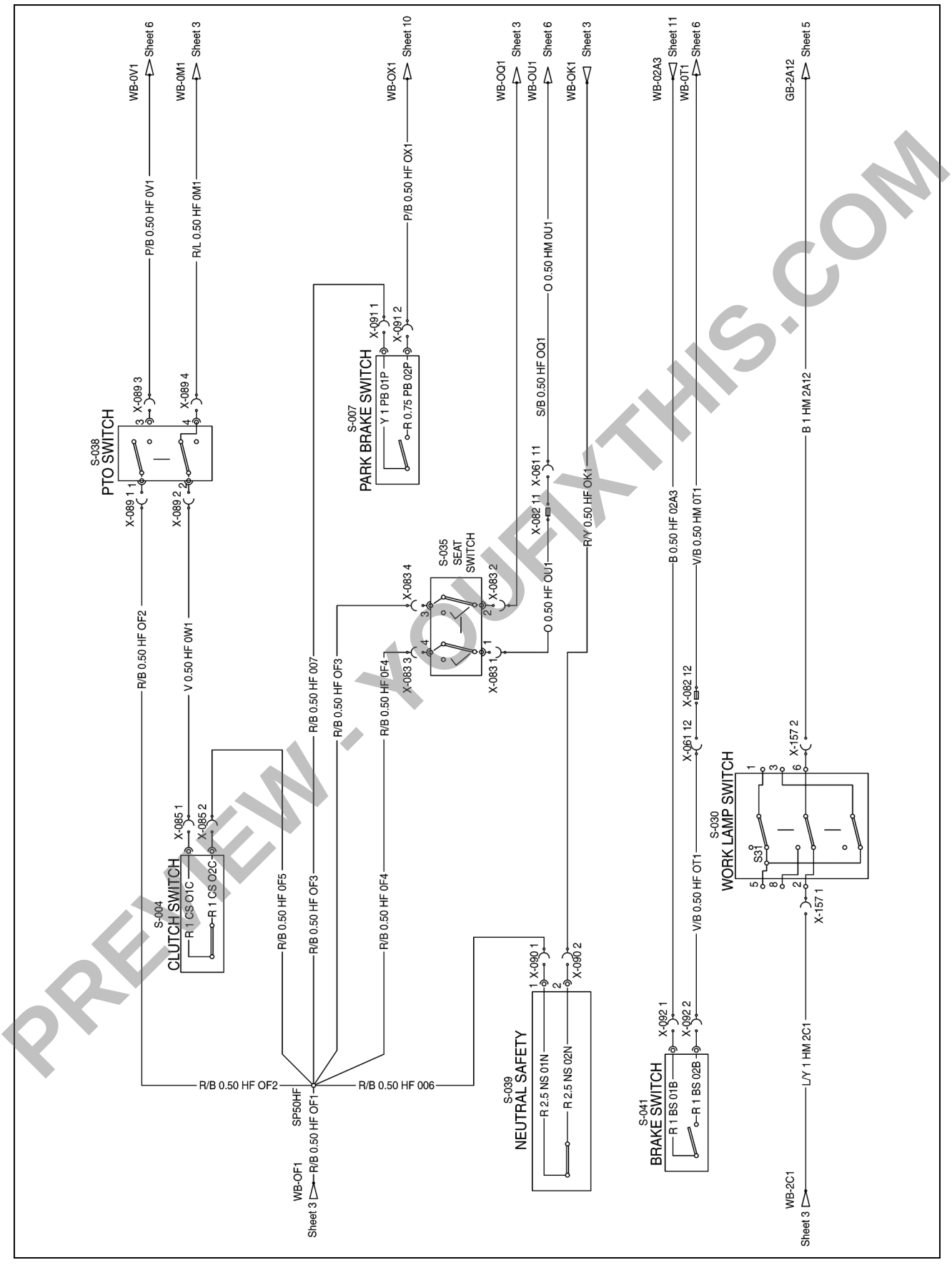

84280154_4 1

PREVIEW - YOUFIXTHIS.COM

Download full manual at youfixthis.com

6. Install the washer, **(1)**, onto the shaft.
7. Install the lift arm, **(2)**, onto the shaft making sure to align the marks on the shaft and lift arm.
8. Repeat procedure for other side.

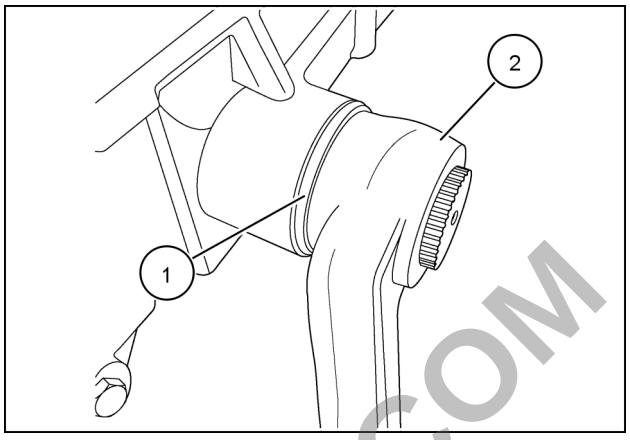

86070613 4

9. Secure both lift arms with snap rings, **(1)**.
10. Remove the hydraulic lift assembly from the rotary stand and install on the tractor using a suitable hoist. Refer to **PRIMARY HYDRAULIC POWER SYSTEM - Install (A.10.A)**

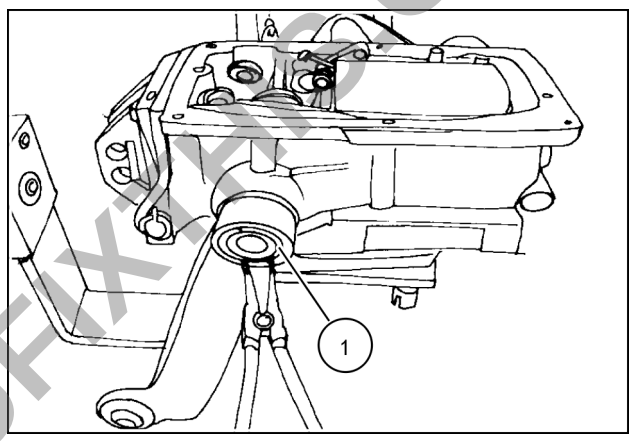

20097471 5

PREVIEW - YOUFIXTHIS.COM

Download full manual at youfixthis.com

Contents

INTRODUCTION

HYDRAULIC - PNEUMATIC - ELECTRICAL - ELECTRONIC SYSTEMSA

PRIMARY HYDRAULIC POWER SYSTEM A.10.A

PRIMARY HYDRAULIC POWER SYSTEM Open center mechanical remote valve A.10.D

HYDRAULIC COMMAND SYSTEM A.14.A

ELECTRICAL POWER SYSTEM A.30.A

LIGHTING SYSTEM A.40.A

ENGINE AND PTO IN ..... B

ENGINE B.10.A

FUEL AND INJECTION SYSTEM B.20.A

AIR INTAKE SYSTEM B.30.A

EXHAUST SYSTEM B.40.A

ENGINE COOLANT SYSTEM B.50.A

LUBRICATION SYSTEM B.60.A

STARTING SYSTEM B.80.A

TRANSMISSION, DRIVE AND PTO OUT C

POWER COUPLING Clutch C.10.C

TRANSMISSION Mechanical C.20.B

REAR PTO Mechanical C.40.B

AXLES, BRAKES AND STEERING ..... D

FRONT AXLE D.10.A

REAR AXLE D.12.A

2WD-4WD SYSTEM Mechanical D.14.B

STEERING Hydraulic D.20.C

SERVICE BRAKE Mechanical D.30.B

PARKING BRAKE Mechanical D.32.B

FRAME AND CAB ..... E

SHIELD E.20.A

USER CONTROLS AND SEAT E.32.A

PREVIEW - YOUFIXTHIS.COM

Download full manual at youfixthis.com

INTRODUCTION

PREVIEW - YOUFIXTHIS.COM

Download full manual at youfixthis.com

PRIMARY HYDRAULIC POWER SYSTEM - Install Mechanical lift assembly

Prior operation:
PRIMARY HYDRAULIC POWER SYSTEM - Assemble Rear lift internal controls (A.10.A)

⚠ WARNING ⚠

Always use suitable tools to align holes. DO NOT USE HAND OR FINGERS. Failure to comply could result in death or serious injury.

B020A

1. Before installing the hydraulic lift assembly on the transmission housing, thoroughly clean and de-grease the mating surfaces and apply a **2 mm** (**0.08 in**) bead of **LOCTITE 518** sealer, as shown.

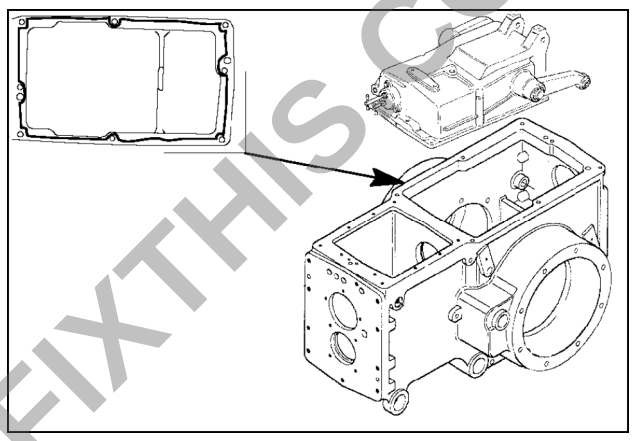

20097476 1

2. Install the hydraulic lift assembly, **(1)**, using a suitable hoist.
3. Secure the lift assembly using the M10 x 110 bolts, **(2)**, M10 x 32 bolts, **(3)**, M10 x 25 bolt (not shown), and M10 nut, **(4)**.
4. Torque all hardware to **50 N·m** (**37 lb ft**)

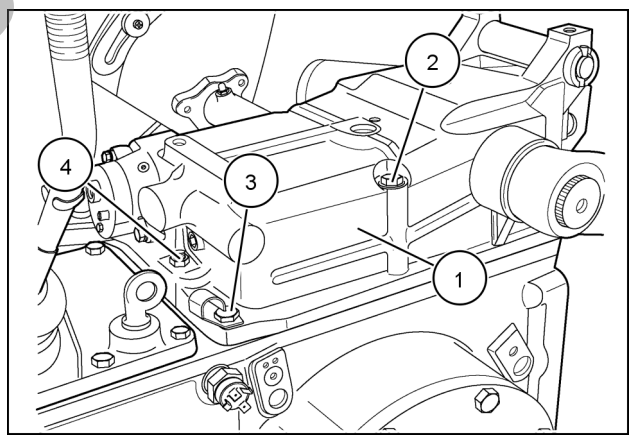

86065628 2

5. Install the three-point linkages (top link, lower link, and lift rod) onto the tractor.

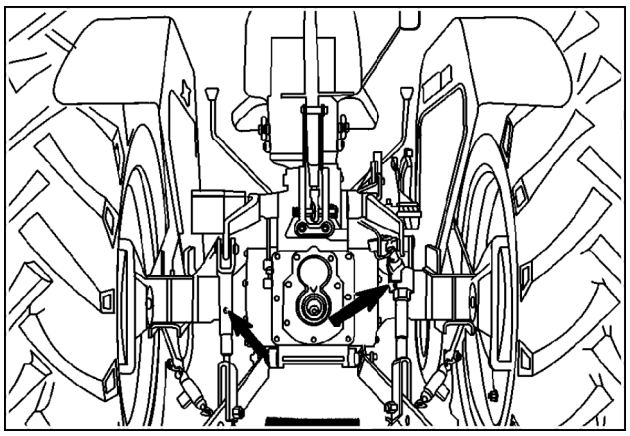

20097477 3

PREVIEW - YOUFIXTHIS.COM
Download full manual at youfixthis.com

The basic operating principles are explained as follows, see Figure **2**:

1. When the key switch, **(6)**, is closed current from the battery **(7)** flows through the indicator lamp, **(5)** and resistor R6, which are in parallel to the field coil **(2)**. From here it continues to flow on through the field coil **(2)**, to the ground completing the circuit back to the battery **(7)**.
2. When the alternator begins to rotate, AC voltages are generated by the stator coil **(3)**. The diodes in the rectifier assembly change the stator AC voltages to DC voltage which appears between ground and the 'B' terminal.
3. The stator also supplies DC field current through the diode trio **(4)**, the field coil **(2)**, the power transistor, Tr2, and then through the diodes in the rectifier assembly back to the stator.
4. When the generated voltage is low, no current flows in the zener diode, DZ, since the voltage at point 'A' is lower than the zener voltage.
5. As the speed and voltage increase, the voltage at point 'A' also increases until it reaches the limiting value set at the factory. As the zener diode, DZ, breaks down, current flows through R1, DZ, and the base-emitter circuit of Tr1 to ground. This renders Tr1 conductive, so that much of the current flows through the collector emitter circuit of Tr1. This reduces the base current of Tr2 thereby reducing the field current. This means that Tr1 turns on and Tr2 turns off.
6. When the generated voltage decreases, the zener diode, DZ, again turns off and Tr1 also turns off. This cycle repeats many times per second, and the alternator output voltage is, therefore, regulated within a narrow limit.

   In other words, the action is similar to the conventional vibrating-contact regulator, in that current to the field coil, **(2)**, is varied to limit the output voltage, but in place of the voltage coil and spring system there is a voltage divider network, R1and R2, and a zener diode, DZ

PREVIEW - YOUFIXTHIS.COM

Download full manual at youfixthis.com

Wiring harness - Electrical schematic frame 07 - sheet 07 23
Wiring harness - Electrical schematic frame 08 - sheet 08 24
Wiring harness - Electrical schematic frame 09 - sheet 09 25
Wiring harness - Electrical schematic frame 10 - sheet 10 26
Wiring harness - Electrical schematic frame 11 - sheet 11 27
Wiring harness - Electrical schematic frame 12 - sheet 12 - 1 28
Wiring harness - Electrical schematic frame 12 - sheet 12 - 2 29
Wiring harness - Electrical schematic frame 13 - sheet 13 30
Wiring harness - Electrical schematic frame 14 - sheet 14 31
Wiring harness - Troubleshooting Safe operation - Operator not present, PTO "OFF" 74
Wiring harness - Troubleshooting Safe operation - Operator not present; PTO “ON” 74
Wiring harness - Troubleshooting Safe Operation - Operator Present 73
Wiring harness - Troubleshooting Safety start circuit - Operator not present 73
Wiring harness - Troubleshooting Safety start circuit - Operator present 73
Wiring harness - Wiring schema Safe operation - Operator not present, PTO "OFF" 38
Wiring harness - Wiring schema Safe operation - Operator not present, PTO “ON” 40
Wiring harness - Wiring schema Safe operation - Operator present 36
Wiring harness - Wiring schema Safety circuit start circuit - Operator not present 34
Wiring harness - Wiring schema Safety start circuit - Operator present 32

PREVIEW - YOUFIXTHIS.COM

Download full manual at youfixthis.com

9. Attach a chain sling to the two hoist eyes, **(1)**.
10. Attach a suitable hoist to the chain sling, and raise the engine enough to support the engine.

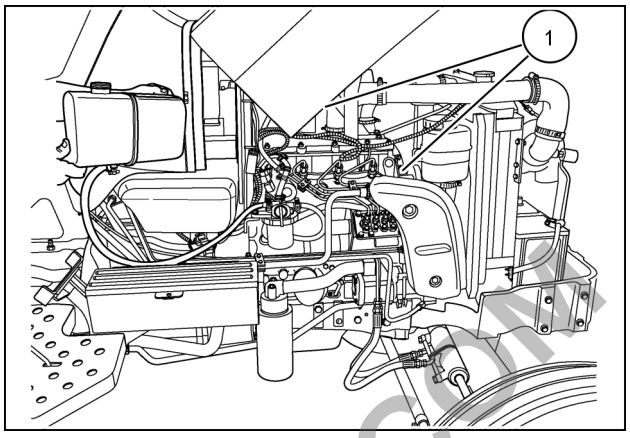

56071902A 3

11. Loosen and remove the engine mounting bolts, **(1)**, on both sides of the frame.
12. Carefully lift the engine from the frame.
13. Attach the engine to a suitable engine stand.
14. With the engine securely attached to the engine stand, remove the chain sling from the two engine hoist eyes.

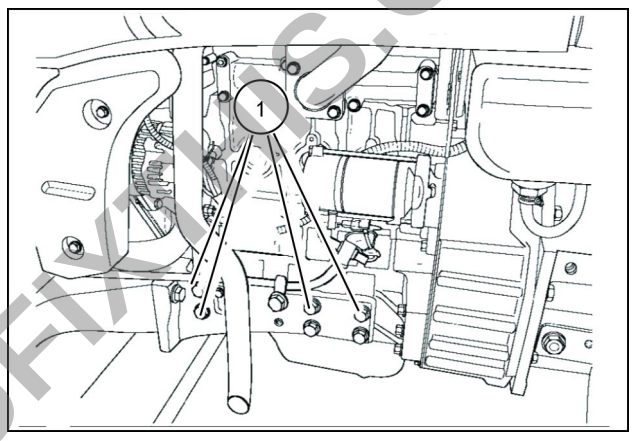

20098751A 4

Next operation:
ENGINE - Install - To frame (B.10.A)

PREVIEW - YOUFIXTHIS.COM

Download full manual at youfixthis.com

Cylinder head - Remove

Prior operation:
Rocker Arm Shaft and Support Bracket - Remove; See: **ENGINE - Disassemble (B.10.A)**.

1. Remove the valve stem caps, **(1)**, and push rods, **(2)**.
2. To remove the cylinder head, remove the cylinder head bolts, **(3)**, by alternately loosening a half turn at a time to prevent warping the head.

NOTE: *Keep all valve components in separately marked containers for reassembly in their original location.*

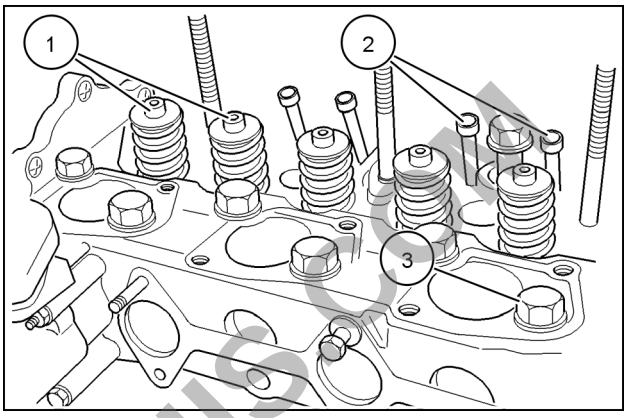

20093361A 1

Next operation:
Cylinder head - Inspect (B.10.A)
Next operation:
Valve Tappet - Removal; See: **ENGINE - Disassemble (B.10.A)**.

PREVIEW - YOUFIXTHIS.COM

Download full manual at youfixthis.com

ENGINE AND PTO IN - B

AIR INTAKE SYSTEM - 30.A

Farmall 55A
Farmall 45A

PREVIEW - YOUFIXTHIS.COM

Download full manual at youfixthis.com

Contents

ENGINE AND PTO IN - B

STARTING SYSTEM - 80.A

TECHNICAL DATA
Engine starter
General specification Starter motor 3

FUNCTIONAL DATA
STARTING SYSTEM
Dynamic description 4
Engine starter
Static description Key Switch 6

SERVICE
Cold start aid
Install Glow plug and connector 7
Engine starter
Remove 8
Disassemble Starter motor 10
Inspect Starter motor 14
Electrical test Starter motor 18
Assemble Starter motor 20
Electrical test No Load 24
Install Starter motor 25
Test Key switch 26
Starter solenoid
Electrical test 27

DIAGNOSTIC
Engine starter
Troubleshooting 30

PREVIEW - YOUFIXTHIS.COM

Download full manual at youfixthis.com

TRANSMISSION, DRIVE AND PTO OUT - C

TRANSMISSION Mechanical - 20.B

Farmall 55A
Farmall 45A

PREVIEW - YOUFIXTHIS.COM

Download full manual at youfixthis.com

Shaft - Install Transmission Pinion shaft

Prior operation:
Shaft - Inspect Transmission Pinion shaft (C.20.B)

1. Use a suitable driver or hydraulic press to install the bearing, **(1)**. on the pinion shaft.

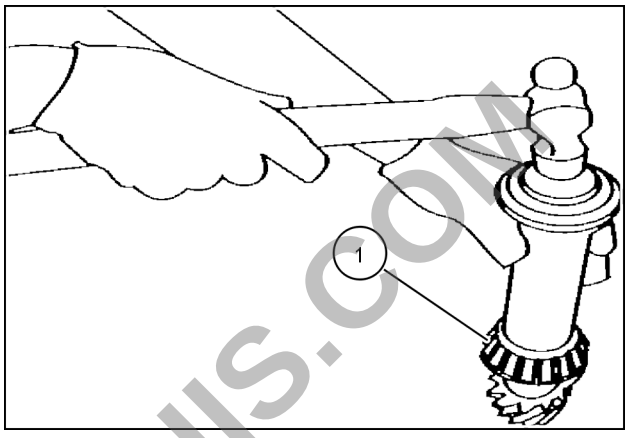

20097879 1

2. Use a suitable bearing race driver and hammer to drive the bearing race for the bearing coupling assembly into the housing.
3. Secure the front of the bearing coupling assembly bearing race with the snap ring.

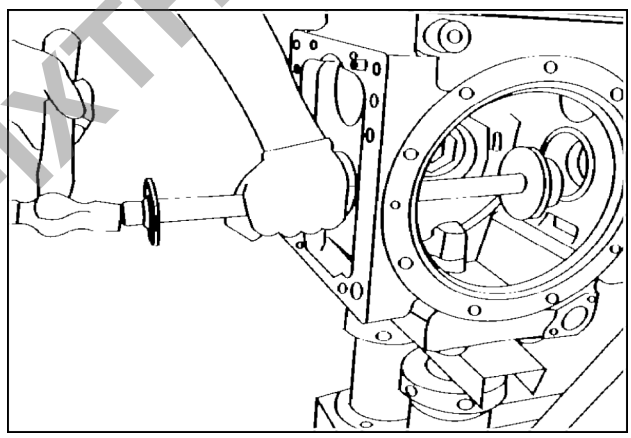
20097880 2

4. Install the pinion shaft, **(1)**, into the housing.
5. Slide the bearing, bushing, low gear, hub, Hi / Low gear coupler and needle bearing onto the pinion shaft during installation.

NOTE: *Install the hub with the released side of hub facing the front of the pinion shaft.*

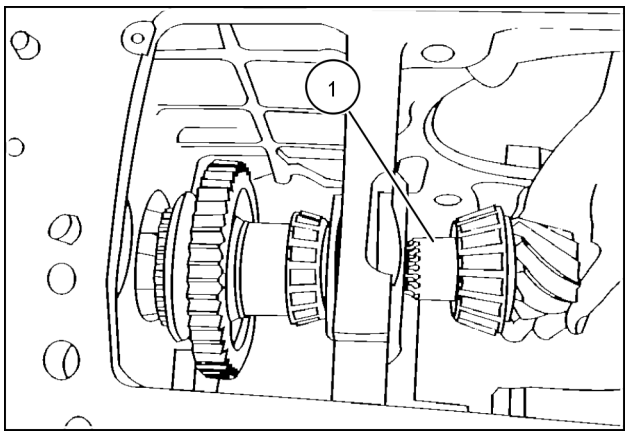

20097881 3

PREVIEW - YOUFIXTHIS.COM

Download full manual at youfixthis.com

Contents

AXLES, BRAKES AND STEERING - D

FRONT AXLE - 10.A

TECHNICAL DATA
FRONT AXLE
General specification - 2WD 4
Torque - 2WD 4
Sealing - 2WD 5
General specification - 4WD 5
Torque - 4WD 7
Special tools - 4WD 8

FUNCTIONAL DATA
FRONT AXLE
Sectional view - 2WD 11
Sectional view - 2WD 12
Static description - 2WD 14
Dynamic description - 4WD 15
Axle
Sectional view - 4WD 18
Differential
Sectional view - 4WD 19
Steering knuckle and King pin
Sectional view - 4WD 20

SERVICE
FRONT AXLE
Adjust Track 21
Remove - 2WD 23
Install - 2WD 25
Test Front wheel setting tests 27
Remove - 4WD 28
Install - 4WD 31
Disassemble - 4WD 32
Inspect - 4WD 39
Assemble - 4WD 40
Adjust - 4WD Ring/pinion adjustment 41
Adjust - 4WD Toe in adjustment 44
Axle
Adjust - Stub axle adjustment 4WD 45

PREVIEW - YOUFIXTHIS.COM

Download full manual at youfixthis.com

FRONT AXLE - Troubleshooting 2WD

Problem	Possible Cause	Correction
Premature tire wear	Wrong inflation pressure.	Inflate tires to correct pressure refer to values suggested in the Operator's Manual. Always comply with values specified by the tire manufacturer.
	Wrong front wheel toe-in.	Adjust toe-in (refer the procedure explained in **FRONT AXLE - Adjust (D.10.A)**under adjustment).
Poor tractor stability	Wrong inflation pressure.	Inflate tires to correct pressure.

PREVIEW - YOUFIXTHIS.COM

Download full manual at youfixthis.com

Gearbox - Remove Transfer box

Prior operation:
Drive shaft - Remove (D.14.B)

1. After removing the drive shaft, drain the oil from the tractor transmission.
2. Detach the hand lever vertical rod, **(1)**, from the transfer box control lever.
3. Remove the mounting bolts, **(2)**, and remove transfer box as an assembly.

NOTE: *Drain the oil from the transfer box by removing the drain plug on the transfer box.*

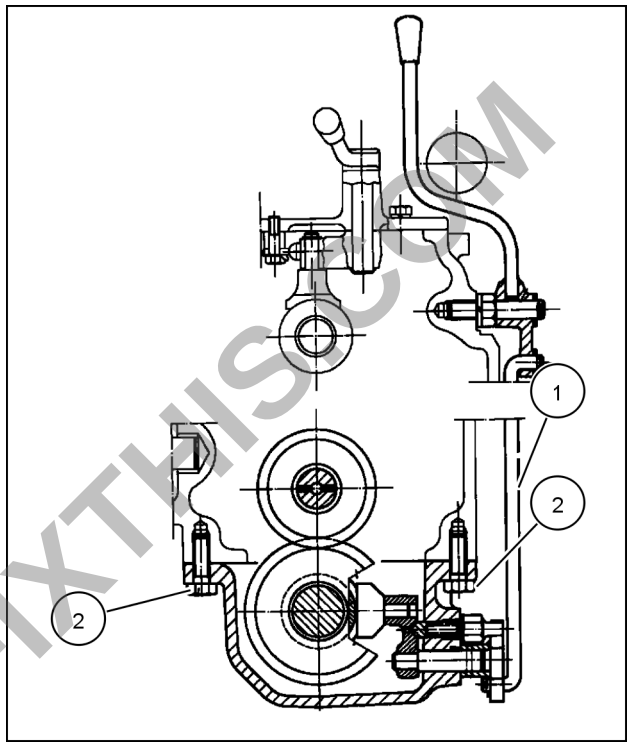

20097721 1

Next operation:
Gearbox - Disassemble Transfer box (D.14.B)

PREVIEW - YOUFIXTHIS.COM

Download full manual at youfixthis.com

Command - Adjust Free play

Prior operation:
Brake - Assemble (D.30.B)

Measure free play of the brake pedals which should be **50 - 55 mm** (**1.97 - 2.17 in**). With the brake pedals locked together, the tractor should stop in a straight line when brakes are applied.
Adjustment is made to the brake pull rods beneath the tractor. Block the wheels , front and rear, unlock the brake pedals and release the parking brake lever. Release the locking clamp, **(1)**, loosen locknut, **(2)**, and rotate the yoke, **(3)**, clockwise to reduce the play and counterclockwise to increase the play.
Repeat the same procedure for the left brake pull rod

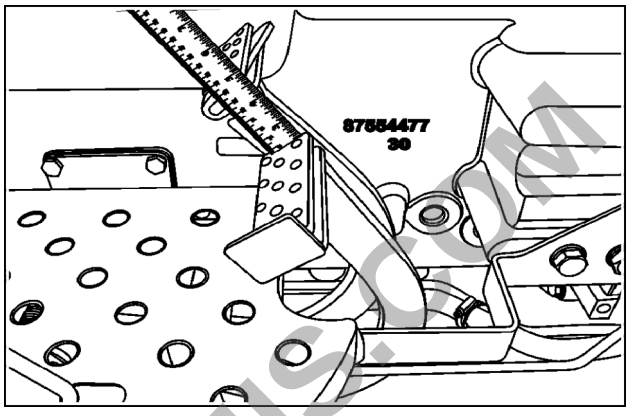

20099874A 1

Lock the brake pedals together and road test to ensure that the brakes are balanced and will stop the tractor in a straight line. Any further adjustment necessary to balance the brakes should be carried out on the right brake.

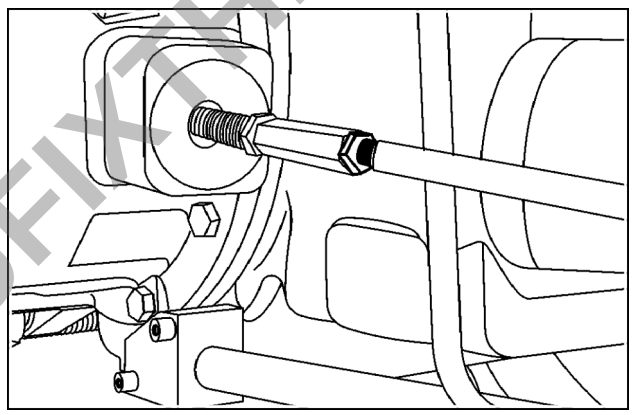

20099873 2

PREVIEW - YOUFIXTHIS.COM

Download full manual at youfixthis.com

PREVIEW ONLY

You're viewing 25 of 884 pages

The full manual includes:

- All 884 pages, complete
- Searchable PDF (find any keyword)
- No watermarks
- Instant download
- Print-ready quality

GET FULL MANUAL NOW

Case IH Farmall 45A, Farmall 55A Service Manual

Scan or click anywhere
youfixthis.com

Click anywhere on this page to get the full manual