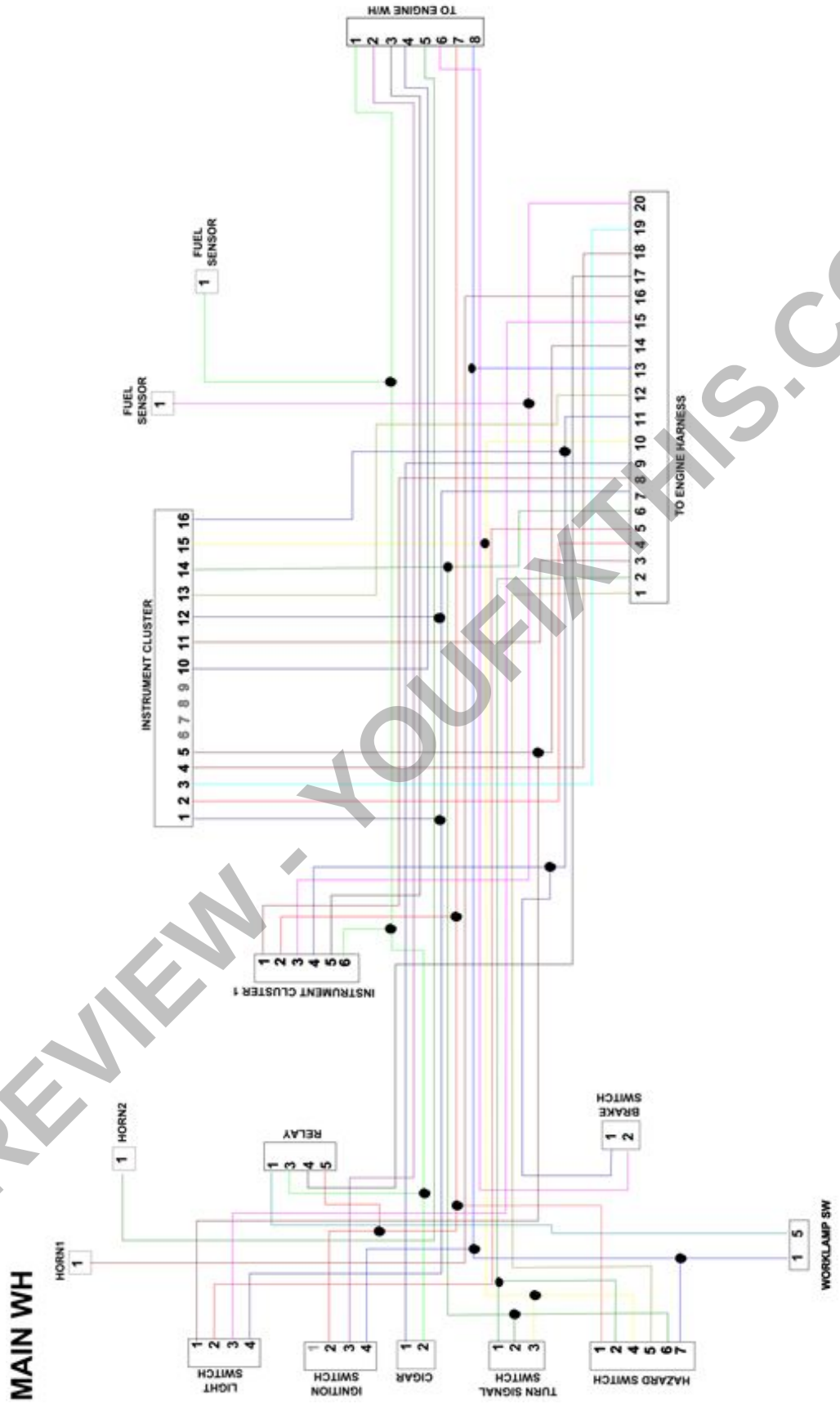

PREVIEW - YOUFIXTHIS.COM

Download full manual at youfixthis.com

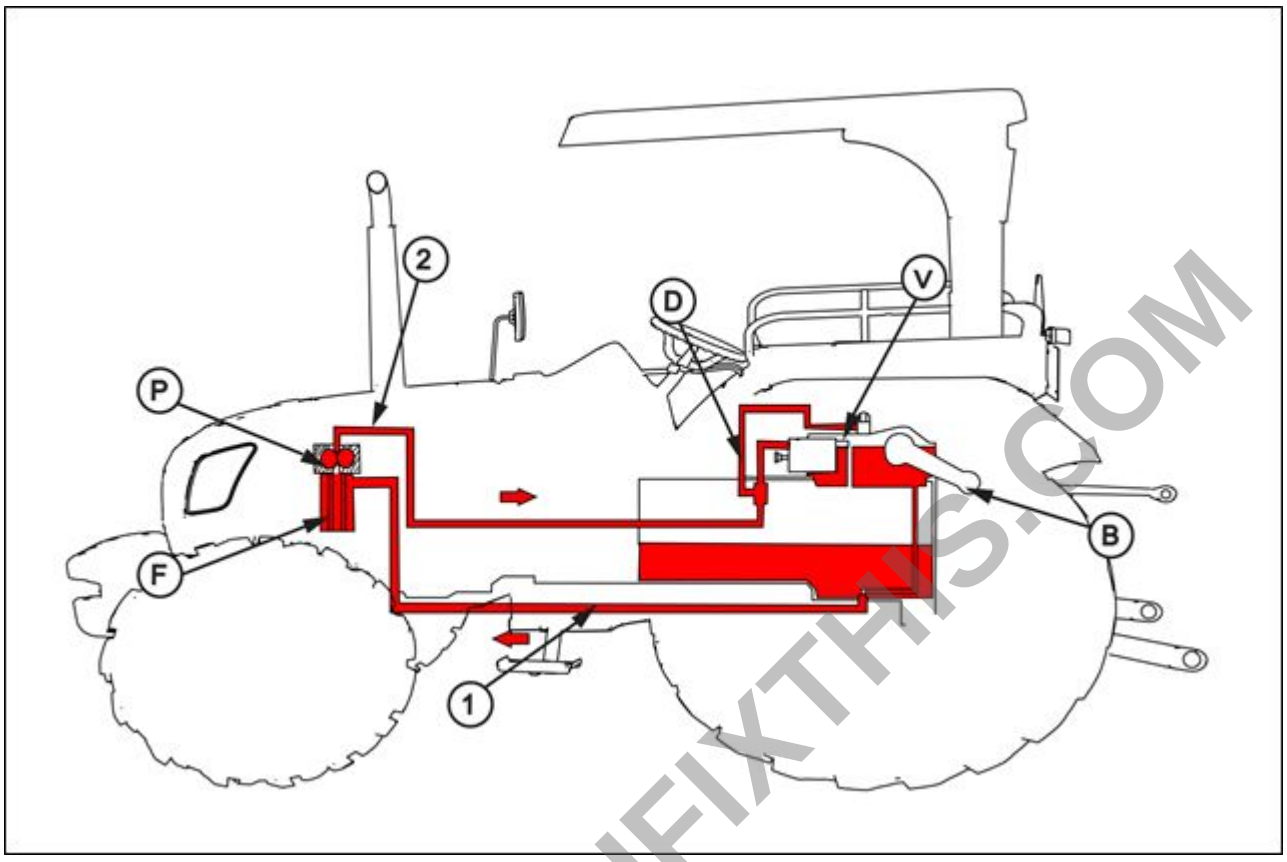

GNIL14TR02586FA 7

(1) Suction line drawing from transmission housing
(2) Delivery line to control valve
(B) Lift arm
(D) Control valve
(F) Oil filter
(P) Hydraulic pump
(V) Relief valve

PREVIEW - YOUFIXTHIS.COM

Download full manual at youfixthis.com

Firing order :	1-2-3	
Injectors:	**55 / 60 / 65 Hp**	**75 Hp**
Make	BOSCH	BOSCH
Nozzle holder	F002 C70 567 (KBAL 86 P 163)	F002 C70 567 (KBAL 86 P 163)
Nozzle.	F002 C40 750 (DSLA 142 P 5565)	F002 C40 738 (DSLA 145 P 5544)
Number of spray orifices	6	6
Spray orifice diameter	**0.176 mm**	**0.193 mm**
Pressure setting	**260 - 268 Kg/cm²**	**260 - 268 Kg/cm²**
Delivery pipes		
Type	5801439057	
pipe dimensions	6X1.6X530	
Pump timing, cylinder no. 1 in compression stroke (delivery connection of cylinder no. 1: marked with letter “A”	55 hp-0.45±0.05 mm plunger lift @ TDC (without LDA) 55 hp- 0.6±0.05 mm plunger lift @ TDC (with LDA) 60 hp- 1±0.05 mm plunger lift @ TDC 65 hp- 1±0.05 mm plunger lift @ TDC 75 hp- 1.2±0.05 mm plunger lift @ TDC	

Engine - Torque

Farmall® 55JXM 5510 CASE 2WD Tier 3 ROPS — ANZ --- APAC --- MEA
Farmall® 55JXM 5510 CASE 4WD TIER 3 ROPS — ANZ --- APAC --- MEA
Farmall® 65JXM TIER 3 2WD — ANZ --- APAC --- MEA
Farmall® 65JXM TIER 3 4WD — ANZ --- APAC --- MEA
Farmall® 75JXM TIER 3 2WD — ANZ --- APAC --- MEA
Farmall® 75JXM TIER 3 4WD — ANZ --- APAC --- MEA

TIGHTENING TORQUES

Description	Thread size	Torque (Nm)	Angle
Cap screw, cylinder head (C1)	**M12 x 1.25**	40	**130±5 + 140±5 °**
Cap screw, main bearing caps (C2)	**M14 x 1.25**	80	**90 °**
Cap screw, timing cover and case (C3)	**M12 x 1.25**	40	
Cap screw, connecting rod caps (C4)	**M11 x 1.25**	40	**60 °**
Cap screw, flywheel (C5)	**M12 x 1.25**	40	**60 °**
Cap screw, rocker shaft bracket (C6)	**M8x1.25**	25	
Nut, crankshaft pulley hub (C7)	**M30 x 1.5**	300	
Cap screw, fan and alternator drive pulley(C8)	**M12 x 1.25**	49	
Nut, injection pump shaft gear (C9)	**M12 x 1.25**	64	
Nuts, injection pump to support (C10)	**M12 x 1.25**	23	
Retaining screws, additional weights (C11)	**M12 x 1.25**	110	

Engine - Sealing

Farmall® 55JXM 5510 CASE 2WD Tier 3 ROPS — ANZ --- APAC --- MEA
Farmall® 55JXM 5510 CASE 4WD TIER 3 ROPS — ANZ --- APAC --- MEA
Farmall® 65JXM TIER 3 2WD — ANZ --- APAC --- MEA
Farmall® 65JXM TIER 3 4WD — ANZ --- APAC --- MEA
Farmall® 75JXM TIER 3 2WD — ANZ --- APAC --- MEA
Farmall® 75JXM TIER 3 4WD — ANZ --- APAC --- MEA

SEALANTS

Operation Description	Sealant Specification
Adopter for Oil Filter (S1)	**LOCTITE® 270**
Adopter for Tachometer Cable (S2)	**LOCTITE® 243™**
Flywheel Housing to Engine Block (S3)	**LOCTITE® 510™**
Timing Gear case Studs (S4)	**LOCTITE® 270**
Timing Gear cover Dowel pin(S5)	**LOCTITE® 270**

Download full manual at youfixthis.com
PREVIEW - YOUFIXTHIS.COM

1. Remove front ballast weights **(1)**, if fitted.

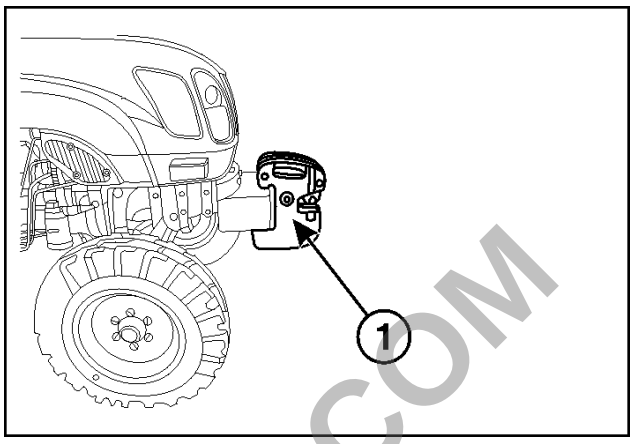

GNIL14TR02001AA 1

2. Pull the lock **(1)** out, and open the front hood.

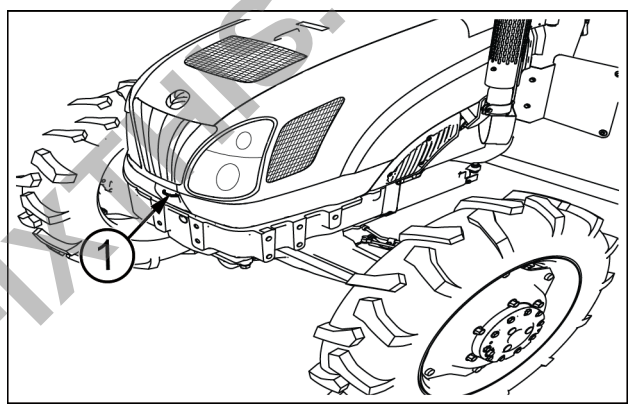

GNIL14TR02002AA 2

3. To maintain the hood in the raised position, a gas strut **(1)** is provided underside the hood.

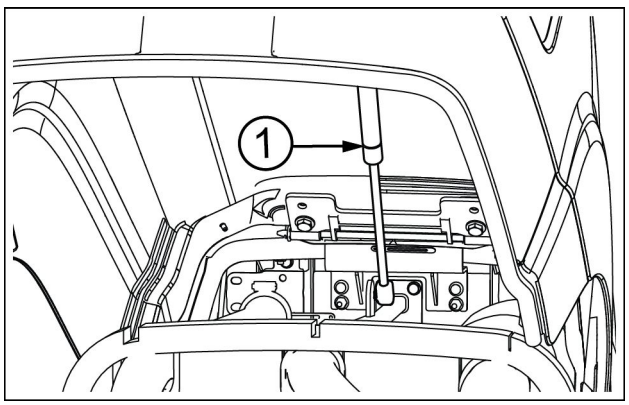

GNIL14TR02003AA 3

4. Disconnect the negative terminal **(1)** of the battery followed by the positive terminal.

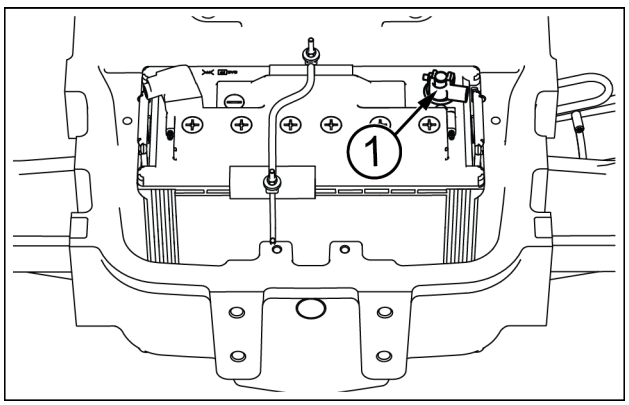

GNIL14TR02004AA 4

PREVIEW - YOUFIXTHIS.COM

Download full manual at youfixthis.com

Engine - Troubleshooting

Farmall® 55JXM 5510 CASE 2WD Tier 3 ROPS	ANZ --- APAC --- MEA
Farmall® 55JXM 5510 CASE 4WD TIER 3 ROPS	ANZ --- APAC --- MEA
Farmall® 65JXM TIER 3 2WD	ANZ --- APAC --- MEA
Farmall® 65JXM TIER 3 4WD	ANZ --- APAC --- MEA
Farmall® 75JXM TIER 3 2WD	ANZ --- APAC --- MEA
Farmall® 75JXM TIER 3 4WD	ANZ --- APAC --- MEA

Problem	Possible Cause	Correction
Engine does not develop full power	Clogged air cleaner	Clean or renew element
	Fuel line obstructed	Clean
	Faulty injectors	Clean and reset
	Incorrect valve clearance adjustment	Check and reset
	Burnt, worn or sticking valves	Replace valves with new or oversize, and/or machine the valve guide bores
	Blown head gasket	Check head flatness and fit new gasket
	Incorrect fuel delivery	Check injectors and pump
	Low cylinder compression	Renew piston rings or bore/ re-sleeve as necessary
Oil pressure warning light fails to operate	Bulb burnt out	Renew bulb
	Warning Light pressure switch faulty	Renew pressure switch
	Warning light circuit faulty	Check and renew wiring
Excessive exhaust smoke	Exhaust leak on exhaust manifold	Fit new gasket
	Air cleaner dirty or restricted	Clean
	Excessive fuel delivery	Overall injection pump and injectors
Engine Knocks	Diluted or thin oil	Check crankshaft bearings for damage, change as required. Drain and refill with specified oil and renew filter
	Insufficient oil supply	Check oil level and top up as necessary. Overhaul or renew pump as necessary. Check oil filter is not clogged
	Low oil pressure	Overhaul pump or relief valve as necessary.
	Excessive crankshaft end play	Install new thrust bearing liner
	Flywheel or ring gear excessive run—out.	Skim flywheel or fit new ring gear
	Bent or twisted connecting rods	Renew connecting rods
	Excessive piston-to- cylinder	Re-bore/re-sleeve block and fit i bore clearance new pistons
	Excessive piston ring clearance	Fit new pistons and rings
	Broken rings	Fit new rings, check bore and pistons for damage
	Excessive piston pin clearance	Fit new piston or pin
	Piston pin retainer loose or missing	Install new retainer, and check bore/pistons for damage
	Excessive camshaft play	Install new thrust plate
	Imperfections on timing gear teeth	Renew timing gear
	Excessive timing gear backlash	Check and adjust backlash / renew timing gear
Engine overheats	Hose connection leaking or collapsed	Tighten hose connection, renew hose if damaged
	Radiator cap defective or not sealing	Renew radiator cap
	Radiator leakage.	Repair/renew radiator
	Improper fan belt adjustment	Re-adjust fan belt
	Radiator fins restricted	Clean with compressed air
	Faulty thermostat	Renew thermostat
	Internal engine leakage	Check for source of leakage, renew gasket or defective parts
	Water pump faulty	Overhaul water pump
	Exhaust gas leakage into cooling	Renew cylinder head gasket

PREVIEW - YOUFIXTHIS.COM

Download full manual at youfixthis.com

Engine - General specification

Farmall® 55JXM 5510 CASE 2WD Tier 3 ROPS	ANZ --- APAC --- MEA
Farmall® 55JXM 5510 CASE 4WD TIER 3 ROPS	ANZ --- APAC --- MEA
Farmall® 65JXM TIER 3 2WD	ANZ --- APAC --- MEA
Farmall® 65JXM TIER 3 4WD	ANZ --- APAC --- MEA
Farmall® 75JXM TIER 3 2WD	ANZ --- APAC --- MEA
Farmall® 75JXM TIER 3 4WD	ANZ --- APAC --- MEA

Table 1

GENERAL SPECIFICATIONS	
Make	IVECO
Type	4 stroke, diesel, naturally aspirated, direct injection, water cooled
Power	**55/60/65/75 Hp**
No of Cylinders	3
Bore	**104 mm**
Stroke	**115 mm**
Cubic Capacity	**2931 cm³**
Compression Ratio	18:1
Firing Order	1–2–3
Idle Speed	**650 ± 50 RPM**
Maximum no Load Speed	**2550 ± 50 RPM**
Rated Speed	**2300 RPM**
Engine block	
Cylinder liner seat diameter in engine block	**106.850 - 106.900 mm**
Cylinder sleeve O.D	**106.94 - 106.97 mm**
Interference between liners and seats in block	**0.04 - 0.12 mm**
Liner O.D oversize	**0.2 mm**
Cylinder liner inner diameter	**104.00 - 104.024 mm**
Maximum ovality and taper due to wear	**0.12 mm**
Liner inner diameter oversize	**0.4 - 0.8 mm**
Camshaft bush seat diameters	
Front	**54.780 - 54.805 mm**
Intermediate	**54.280- - 54.305 mm**
Rear	**53.780 - 53.805 mm**
Tappet seat bore diameter	**15.000 - 15.018 mm**
Tappet oversize	**0.1–0.2 - 0.3 mm**
Main bearing seat bore diameter	**84.200 - 84.230 mm**
Cylinder head	
Valve guide seat bore diameter in head	**13.950 - 13.983 mm**
Valve guide oversize	**0.2 mm**
Valve stand-in	**0.7 - 1.0 mm**
Maximum stand-in permitted	**1.3 mm**
Injector standout	**0.05 - 0.7 mm**
Max. standout permitted	**1.0 mm**
Original cylinder head height	**92 mm**
Maximum head dressing allowed	**0.5 mm**
Compression pressure	**28 bar**
Engine cracking speed	**250 RPM**
Exhaust valves	
Valve head diameter	**40.75 - 41.25 mm**
Valve stem diameter	**7.975 - 7.990 mm**
Face angle	**45 30’ ± 7’ °**
Tappet clearance	**0.30 ± 0.05 mm**
Cam lift	**6.127 mm**
Valve lift	**10.445 mm**
Intake valves	

PREVIEW - YOUFIXTHIS.COM

Download full manual at youfixthis.com

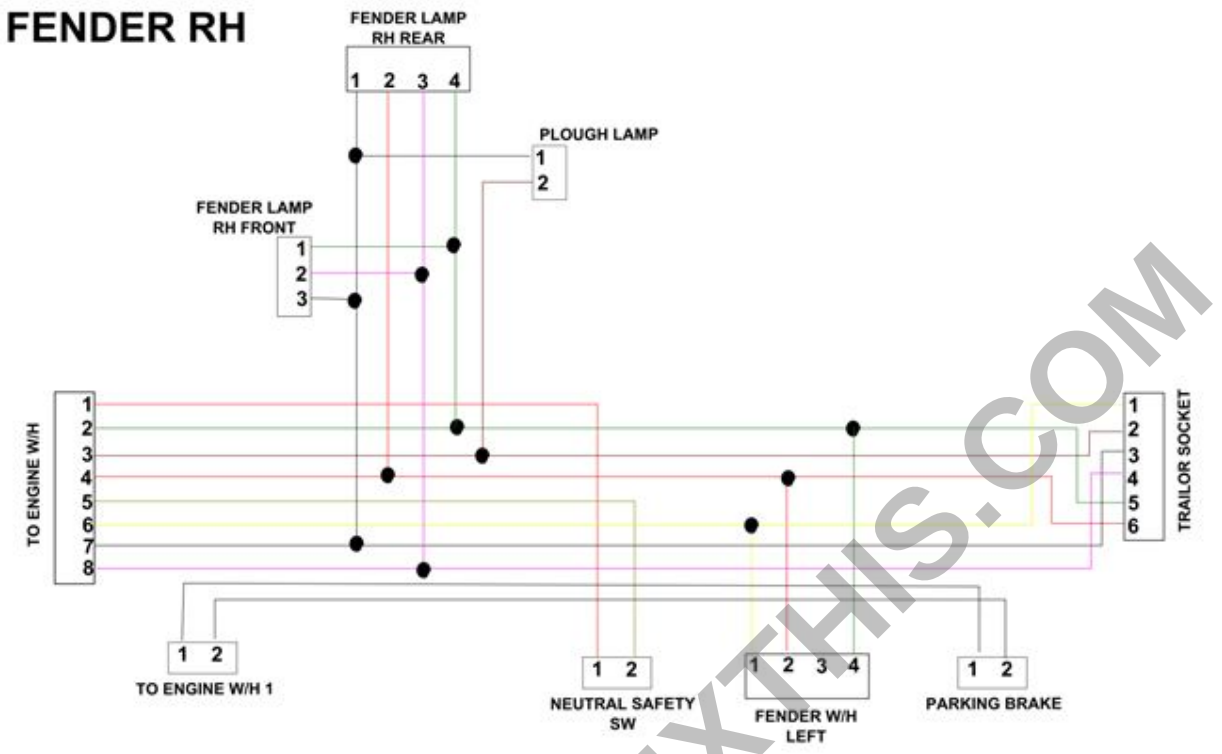

GNIL14TR02737FA 2

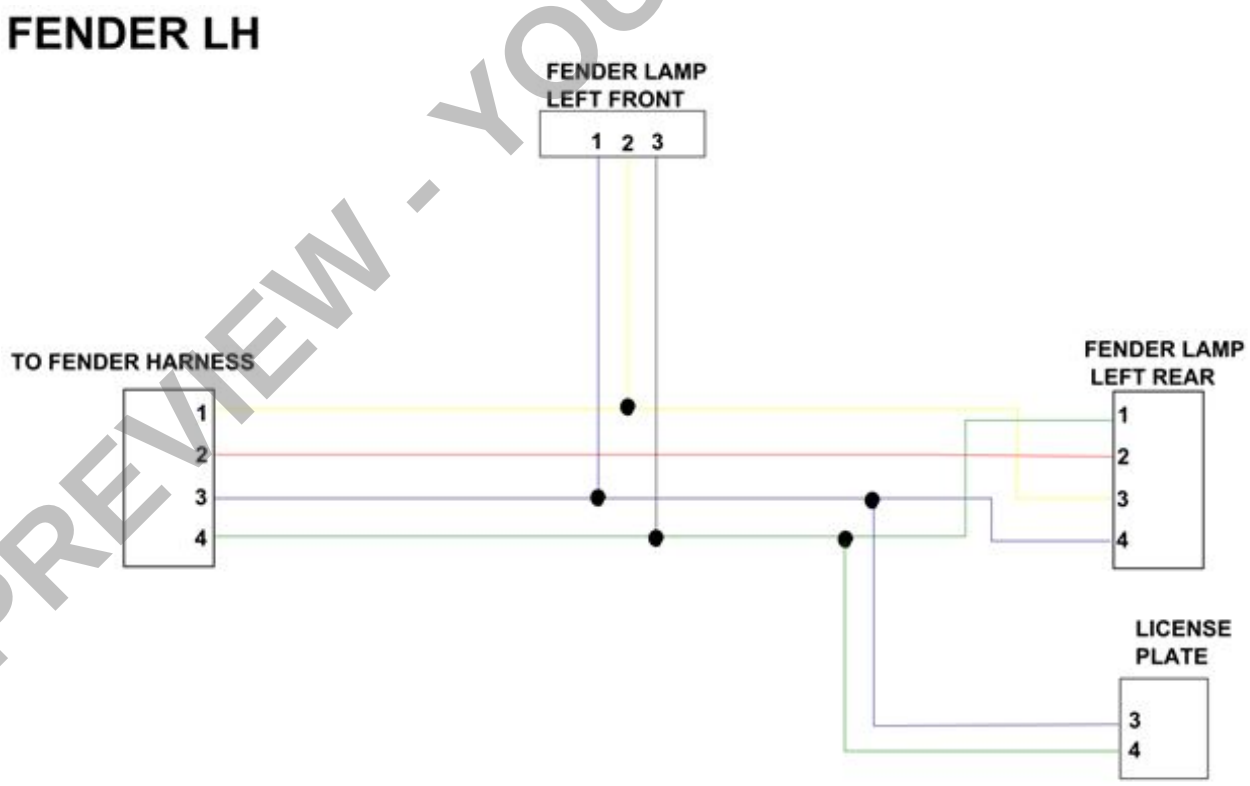

GNIL14TR02738HA 3

PREVIEW - YOUFIXTHIS.COM

Download full manual at youfixthis.com

HYDRAULIC CIRCUIT DIAGRAM

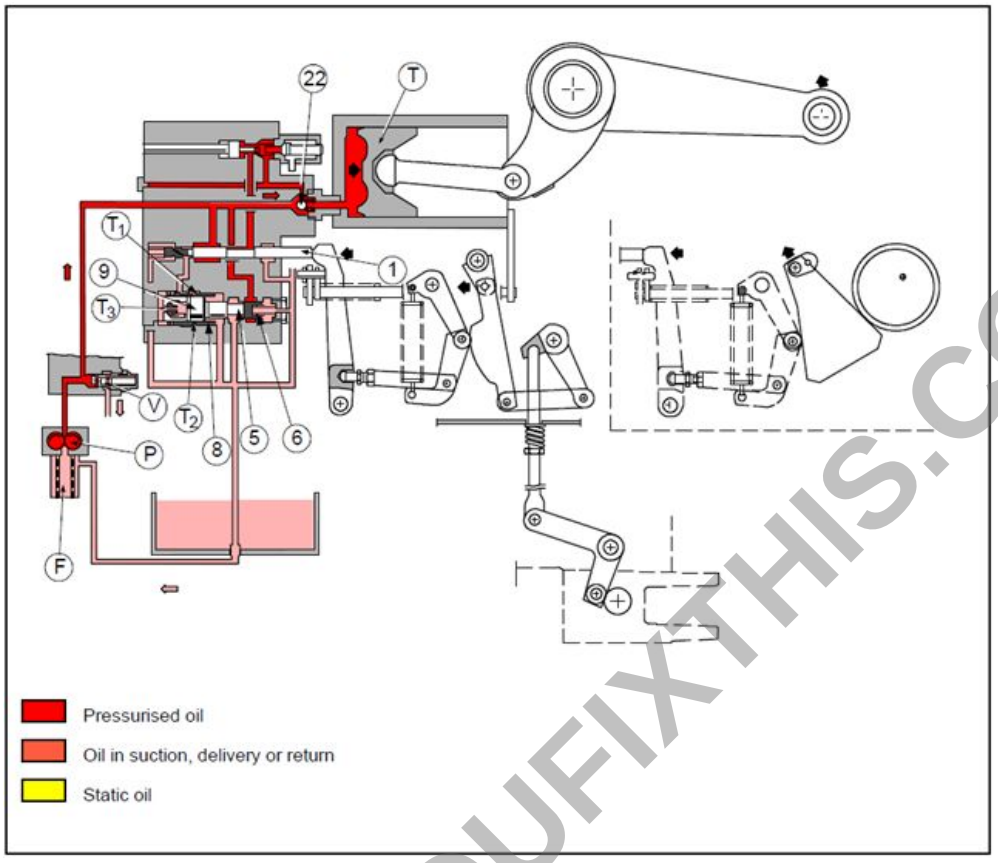

GNIL14TR02587FA 8

(F) Filter
(P) Hydraulic pump
(T) Lift arm piston
(22) Check valve
(V) Relief valve
(1) Spool valve
(5) Plunger
(6) Plunger spring
(8) Piston seat
(9) Piston

PREVIEW - YOUFIXTHIS.COM

Download full manual at youfixthis.com

Timing gear housing - Install

Farmall® 55JXM 5510 CASE 2WD Tier 3 ROPS	ANZ --- APAC --- MEA
Farmall® 55JXM 5510 CASE 4WD TIER 3 ROPS	ANZ --- APAC --- MEA
Farmall® 65JXM TIER 3 2WD	ANZ --- APAC --- MEA
Farmall® 65JXM TIER 3 4WD	ANZ --- APAC --- MEA
Farmall® 75JXM TIER 3 2WD	ANZ --- APAC --- MEA
Farmall® 75JXM TIER 3 4WD	ANZ --- APAC --- MEA

1. If the rear cover was removed thoroughly clean the mating surfaces between the cover and engine block. Use a suitable solvent cleaner and apply a thin coat of grease to the engine block. Assemble the cover to the engine and tighten the retaining bolts to the specified torque.
2. Rotate the flywheel to PMS1 position before assembling timing gears.

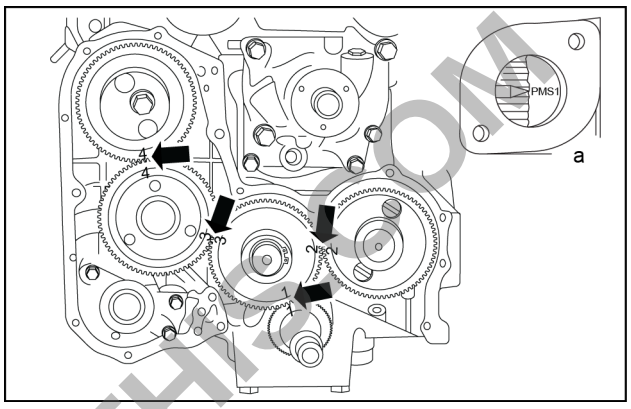

NDIL14TR00112AB 1

3. Assemble the camshaft, thrust washer, flange and camshaft gear and tighten the two bolts to specified torque.

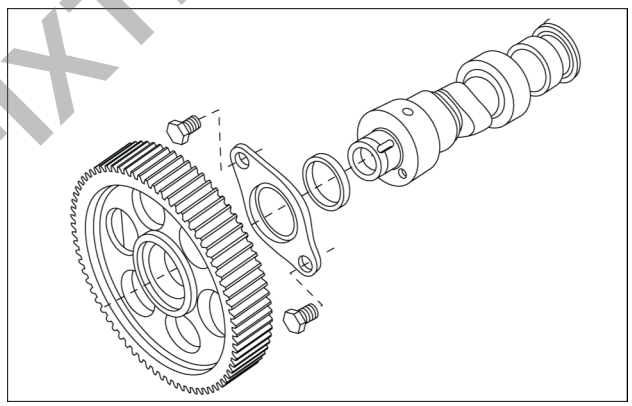

NDIL14TR00112AA 2

4. Install the Feed Pump Drive Gear by following the removal procedure in reverse.
5. Install the idler gear to the block, Align the timing marks 1-1, 2-2 and 3-3 to the crankshaft gear, camshaft drive gear and feed pump drive gear respectively.

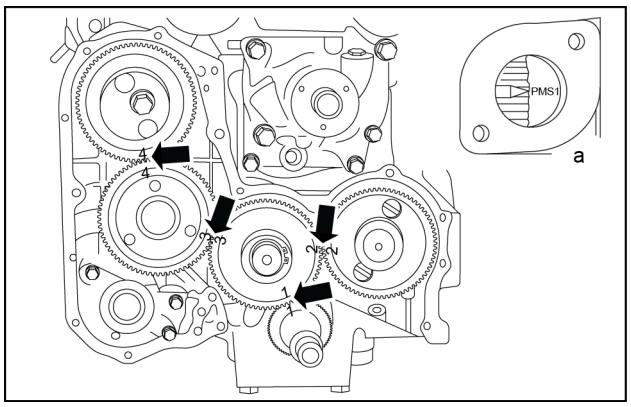

NDIL14TR00112AB 3

NOTE: *Ensure that Flywheel is positioned at PMS1 mark while aligning the timing marks.*

PREVIEW - YOUFIXTHIS.COM

Download full manual at youfixthis.com

Engine - Install

Farmall® 55JXM 5510 CASE 2WD Tier 3 ROPS	ANZ --- APAC --- MEA
Farmall® 55JXM 5510 CASE 4WD TIER 3 ROPS	ANZ --- APAC --- MEA
Farmall® 65JXM TIER 3 2WD	ANZ --- APAC --- MEA
Farmall® 65JXM TIER 3 4WD	ANZ --- APAC --- MEA
Farmall® 75JXM TIER 3 2WD	ANZ --- APAC --- MEA
Farmall® 75JXM TIER 3 4WD	ANZ --- APAC --- MEA

Engine Installation

Re-install the engine on the tractor by observing the following:

Re-Installation follows the removal procedure in reverse from step 10 back to step 1

Apply thread sealant at the required places

Before coupling engine and transmission housing clean and decrease the mating surfaces thoroughly and apply a strip of sealing compound of about **2 mm** diameter as shown in the figure

Due care should be taken in aligning input shaft with clutch plates and pilot bearing as to avoid damage to input shaft and hearing

Apply the torque setting listed in tightening torque table.

Before starting all the fluid levels should be correct. Start and run the engine until oil and coolant temperature reaches to operating temperature and check for leaks and rectify if required and recheck fluid levels.

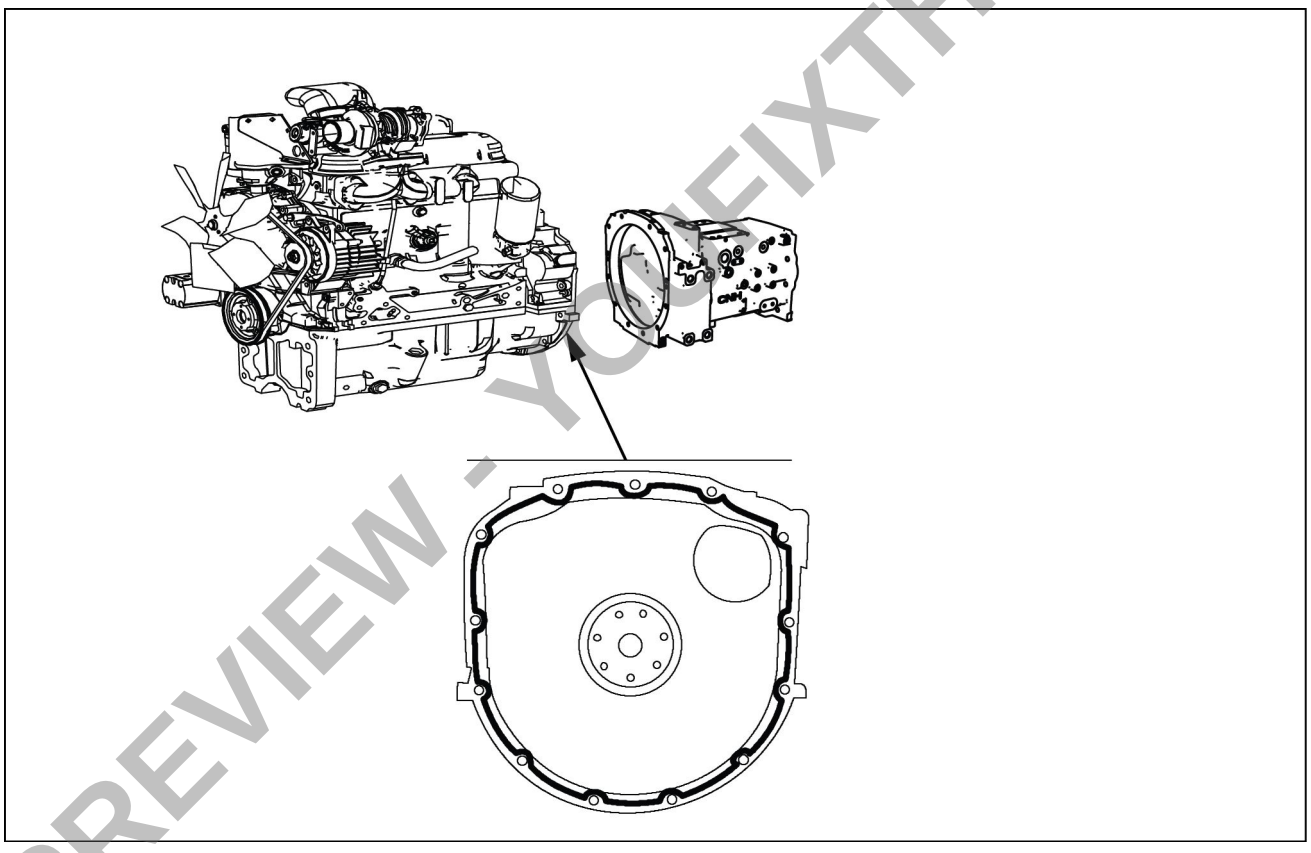

GNIL14TR02036FA 1

PREVIEW - YOUFIXTHIS.COM

Download full manual at youfixthis.com

Problem	Possible Cause	Correction
	Coolant aeration	Tighten all connections and check coolant level is correct. Ensure cylinder head gasket has not blown
	Cylinder head gasket improperly installed	Renew cylinder head gasket installed
	Hot spot due to rust and scale or clogged water jackets	Reverse flush entire clogged water
	Obstruction to radiator air flow	Remove the obstruction
	Extended engine idling	Do not allow engine to idle for long periods
	Oil cooler tube blocked	Clean
	Radiator core tubes blocked	Check free flow
Water temperature gauge fails to reach normal operating temperature	Faulty temperature sender	Renew sender switch
	Incorrect or faulty thermostat	Renew thermostat
	Faulty water temperature gauge	Renew temperature gauge
Low oil pressure	Engine oil level low	Top up, as necessary
	Wrong grade of oil	Drain and refill with correct grade of oil
	Blocked oil pump sump screen	Clean pump screen
	Oil pressure relief valve faulty	Fit new relief valve
	Oil pump worn	Renew oil pump
	Excessive oil pump rotor and shaft assembly clearance	Overhaul pump
	Excessive main bearing or connecting rod bearing clearance	Install new bearings inserts and bearing clearance or re-grind crankshaft if necessary
Excessive oil consumption	Engine oil level too high	Reduce oil level
	External oil leaks	Renew gaskets and seals, where necessary. Check mating surfaces for damage or distortion
	Worn valves, valve guides or bores	Renew
	Cylinder head gasket leaking	Renew gasket. Check head for damage or distortion
	Oil loss past the pistons and rings	Renew rings and/or re-bore/ re-sleeve block as necessary
	Oil cooler leak	Repair/renew oil cooler assembly
Engine tends to keep firing after fuel is shut off	Air cleaner dirty or choked.	Clean or renew element
Excessive exhaust smoke	Exhaust leak in exhaust manifold	Fit new gasket
	Air cleaner dirty or choked	Clean
	Excessive fuel delivery	Overall injection pump and injectors

PREVIEW - YOUFIXTHIS.COM

Download full manual at youfixthis.com

Valve head diameter	**45.300 - 45.500 mm**
Valve stem diameter	**7.985 - 8.000 mm**
Face angle	**60 30´ ± 7´ °**
Tappet clearance (cold)	**0.30 ± 0.05 mm**
Cam lift	**5.889 mm**
Valve lift	**10.445 mm**
Tiner - Internal Exhaust Gas Recirculation(EGR)	
Intake opening (After BDC, during exhaust stroke)	**3 °**
Intake valve closing (Before TDC, during Exhaust stroke)	**61 °**
'Tiner' cam lobe lift	**1.076 mm**
Intake valve lift (tiner)	**1.908 mm**
Valve springs	
Number per valve	**1 mm**
Free length	**44.6 mm**
Length loaded at **26.1 - 28.9 kg**	**34 mm**
Length loaded at **51.2 - 56.5 kg**	**23.8 mm**
Valve timing	
Intake opening (before top dead centre)	**15 °**
Intake closing (after bottom dead centre)	**45 °**
Exhaust opening (before bottom dead centre)	**56 °**
Exhaust closing (after top dead centre)	**26 °**
Valve inserts	
Valve guide OD	**13.933 - 14.016 mm**
Valve guide oversize	**0.2 mm**
Valve guide interference fit in housing cylinder head	**0.005 - 0.050 mm**
Valve guide fitted ID after reaming	**8.023 - 8.043 mm**
Valve stem clearance in guide	**0.023 - 0.058 mm** (for intake valve) **0.033 - 0.068 mm** (for exhaust valve)
Maximum wear clearance .	**0.13 mm**
Maximum valve stem eccentricity over one revolution with stylus on sealing face	**0.03 mm**

Crank gear

Crankshaft- Bearings	
Main journal diameter	**79.791 - 79.810 mm**
Main journal undersize	**0.254-0.508-0.762-1.016 mm**
Main bearing wall thickness	**2.168 - 2.178 mm**
Main bearing undersize	**0.254-0.508-0.762-1.016 mm**
Main journal clearance in bearings	**0.034 - 0.103 mm**
maximum wear clearance	**0.180 mm**
Crank pin diameter	**63.725 - 63.744 mm**
Crank pin undersize	**0.254-0.508-0.762-1.016 mm**
Big end bearing wall thickness	**1.805 - 1.815 mm**
Big end bearing undersize	**0.254-0.508-0.762-1.016 mm**
Crank pin clearance in big end bearing	**0.033 - 0.087 mm**
maximum wear clearance	**0.180 mm**
Crankshaft thrust washer thickness	**3.378 - 3.429 mm**
Thrust washer oversize	**0.127-0.254-0.508 mm**
Width of main bearing housing over thrust washers	**31.766 - 31.918 mm**
Length of corresponding main journal	**32.000 - 32.100 mm**
Crankshaft end float	**0.082 - 0.334 mm**
maximum wear end float	**0.40 mm**
Maximum main journal and crank pin ovality or taper after grinding	**0.01 mm**
Maximum main journal and crankpin ovality or taper due to wear or taper due to wear	**0.05 mm**

PREVIEW - YOUFIXTHIS.COM

Download full manual at youfixthis.com

HEADLAMP WH

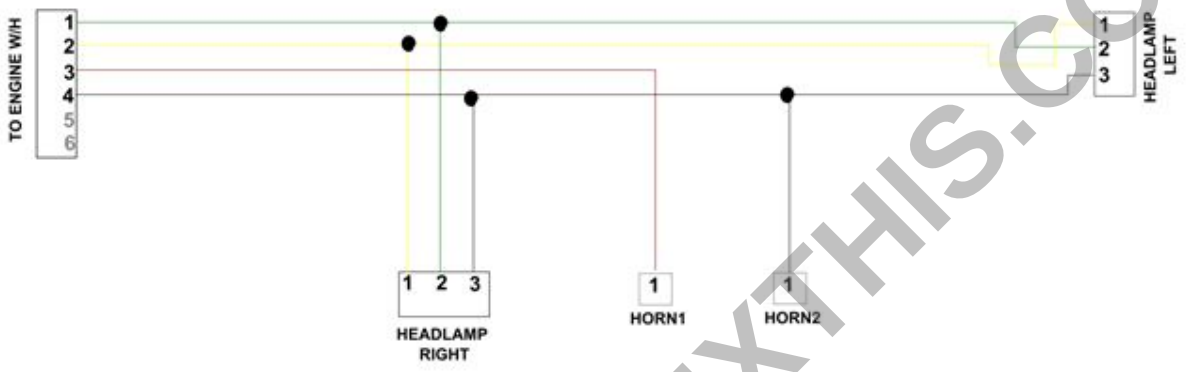

GNIL14TR02739FA 4

PREVIEW - YOUFIXTHIS.COM

Download full manual at youfixthis.com

2. LOWERING -- To lower the implement, push the control lever (located in the cab) forward. The control valve spool **(2)** will move to the position indicated in **5**, thus allowing the oil in the lower cylinder chamber to flow to the exhaust **(T)** through line **(A)** , while the upper chamber is connected to the pressure line **(P)** through line **(B)**.

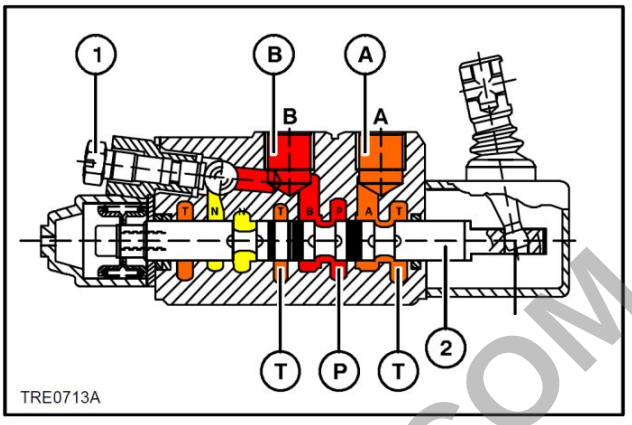

RCVALVE5 5

3. LIFTING -- On pulling the control lever back, the control valve spool **(2)**, **6** moves to connect the cylinder with the pressure line **(P)** by way of line **(A)** . Line **(C)** , for the control of single-acting cylinders, is used in this stage as it is permanently connected to the exhaust **(T)** by the open position of the switching valve **(!)**.

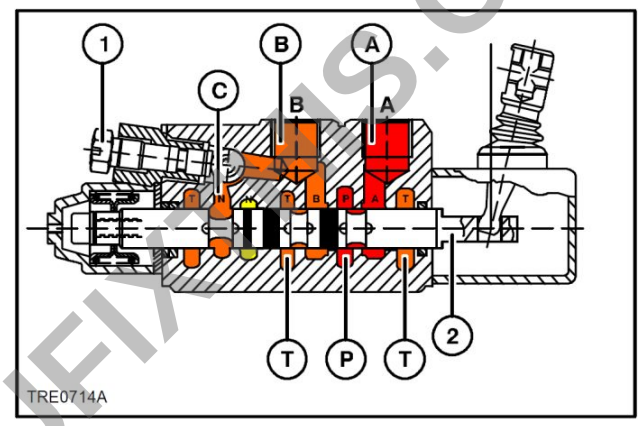

RCVALVE6 6

4. LOWERING -- On pushing the control lever forward, the spool **(2)** will move to the position indicated in **7**. The oil contained in the cylinder, pressurised by the weight of the lifted implement, will flow to the exhaust **(T)** by way of line **(A)**, while the entire flow from the pump is also conveyed to the exhaust **(T)** through the line **(B)**.

NOTE: *To operate a double-acting cylinder, tighten screw **(1)** fully home. To operate a single—acting cylinder, fully undo screw **(1)**.*

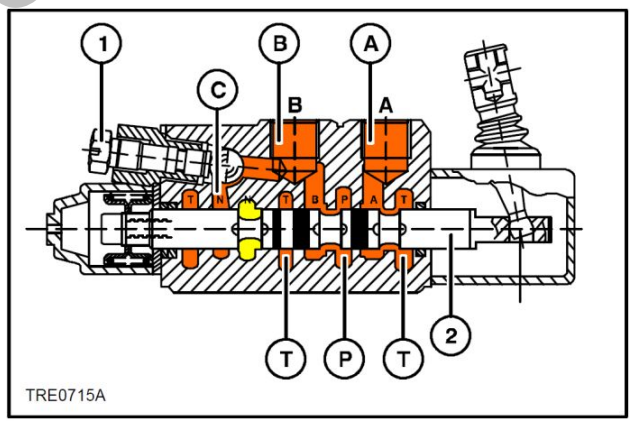

RCVALVE7 7

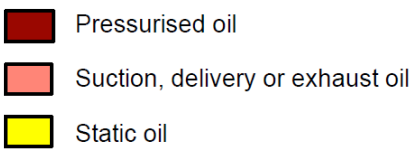

RCVALVE10 8

PREVIEW - YOUFIXTHIS.COM

Download full manual at youfixthis.com

Crankshaft and flywheel - Remove

Farmall® 55JXM 5510 CASE 2WD Tier 3 ROPS	ANZ --- APAC --- MEA
Farmall® 55JXM 5510 CASE 4WD TIER 3 ROPS	ANZ --- APAC --- MEA
Farmall® 65JXM TIER 3 2WD	ANZ --- APAC --- MEA
Farmall® 65JXM TIER 3 4WD	ANZ --- APAC --- MEA
Farmall® 75JXM TIER 3 2WD	ANZ --- APAC --- MEA
Farmall® 75JXM TIER 3 4WD	ANZ --- APAC --- MEA

Flyweel, main bearing and crankshaft

To remove the flywheel, the engine requires to be split from the transmission housing.
The crankshaft itself can only be serviced after removal from the engine for which engine has to be separated from the tractor totally.

NOTE: *Replaceable bearings are installed in production. Ensure correct crankshaft journal to bearing clearance is maintained in service. To renew main bearings, crankshaft has to be removed.*

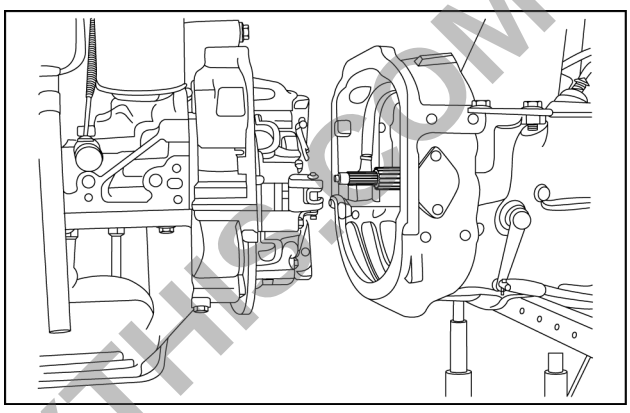

NDIL14TR00147AB 1

Fly wheel removal

1. To gain access to the flywheel separate the engine to transmission.
2. Remove clutch assembly from the flywheel. (Please refer the Clutch removal section)
3. Prior to removal and using a dial indicator, rotate the flywheel, and measure the flywheel run-out and eccentricity relative to flywheel housing. If not to specification, check crankshaft to flywheel seating.

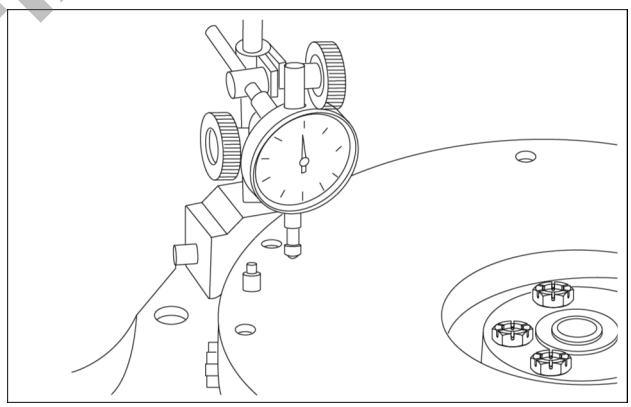

NDIL14TR00149AA 2

4. Loosen flywheel mounting bolts (1) and carefully remove flywheel from engine using suitable hoist.

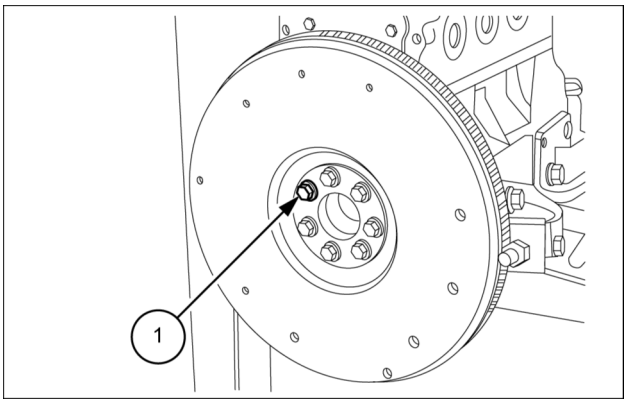

NDIL14TR00150AB 3

PREVIEW - YOUFIXTHIS.COM

Download full manual at youfixthis.com

Timing gear housing - Remove

Farmall® 55JXM 5510 CASE 2WD Tier 3 ROPS	ANZ --- APAC --- MEA
Farmall® 55JXM 5510 CASE 4WD TIER 3 ROPS	ANZ --- APAC --- MEA
Farmall® 65JXM TIER 3 2WD	ANZ --- APAC --- MEA
Farmall® 65JXM TIER 3 4WD	ANZ --- APAC --- MEA
Farmall® 75JXM TIER 3 2WD	ANZ --- APAC --- MEA
Farmall® 75JXM TIER 3 4WD	ANZ --- APAC --- MEA

Engine front cover and timing gear removal

NOTE: *Timing cover and gears can only be serviced after removing the radiator.*

1. Refer “Engine Cooling System”, for Radiator removal procedure
2. Remove alternator removal. Refer Engine stripping section.
3. Loosen fan mounting bolts and remove fan **(1)**
4. Remove fan pulley by gently hammering with mallet or plastic hammer

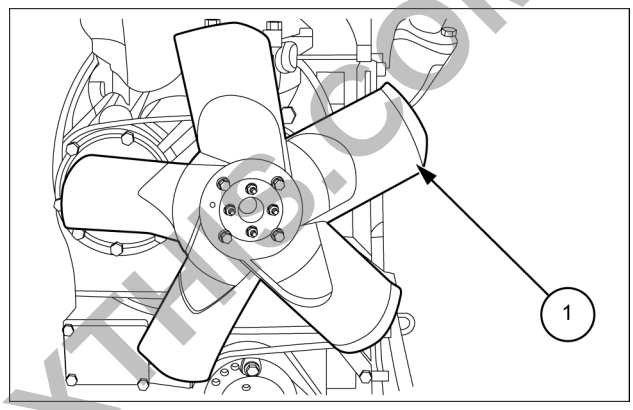

NDIL14TR00088AB 1

5. Loosen dog nut and remove pulley using special tool number **380200597**.

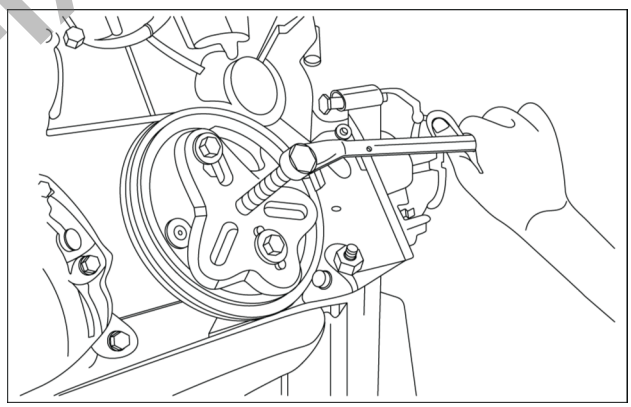

NDIL14TR00090AA 2

6. Loosen all the bolts **(1)** securing front cover and 2 bolts **(2)** on oil sump.

NOTE: *In Power Steering model, connect hydraulic connections to power steering pump and remove pump before removing timing cover*

7. Remove front cover, taking care of front oil seal and oil sump gasket

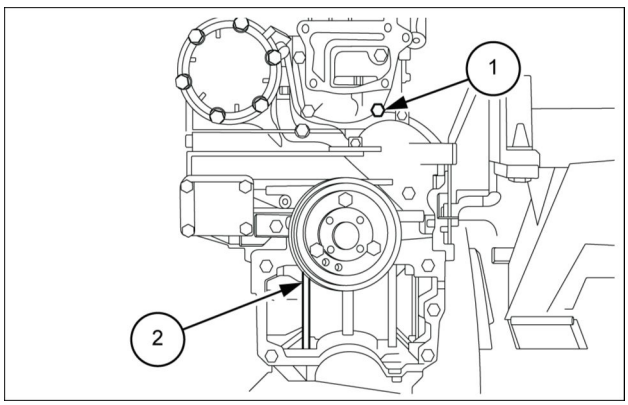

NDIL14TR00091AB 3

PREVIEW - YOUFIXTHIS.COM

Download full manual at youfixthis.com

Inspection

9. Check diaphragm for damage, cut or cracks. Replace diaphragm assembly if necessary.
10. Check rubber valves, the O-ring in nyloc cup and head for damage. If necessary, replace nyloc cup and O-ring.

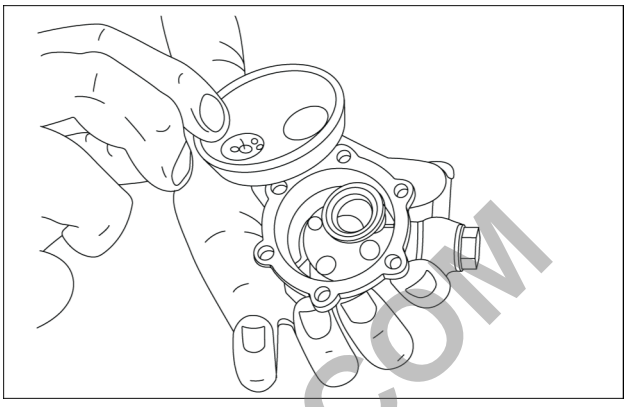

NDIL14TR00206AA 8

Assembly

Follow the reverse order for assembly.

PREVIEW - YOUFIXTHIS.COM

Download full manual at youfixthis.com

Relief valve crack-off setting .	**3.6 bar**
Assembly. clearance between shaft and bushing oil pump drive	**0.016 - 0.070 mm**
Shaft clearance in driven gear	**0.016 - 0.054 mm**
Gear backlash	**0.100 mm**
Gear radial clearance in pump housing	**0.015 - 0.067 mm**
Drive and driven gear width	**15.973 - 16.000 mm**
Gear housing depth in pump body	**16.016 - 16.080 mm**
Drive and driven gear end float	**0.016 - 0.107 mm**
Relief valve spring length:	
- Free	**35.9 mm**
- AT load 134.55±6.73 N	**29 mm**
- AT load 245.70±12.3 N	**23.2 mm**
Oil filter	Mesh on suction and cartridge on delivery

Cooling system

Water pump		Centrifugal, vane	
	60 / 55 Hp	**65 Hp**	**75 Hp**
Water pump drive ratio	1.04	1.18	1.38
Shaft interference fit in impeller		**0.017 - 0.059 mm**	
Shaft interference fit in fan hub		**0.024 - 0.058 mm**	
Face sealing bushing interference fit in impeller		**0.012 - 0.058 mm**	
Thermostat type		Wax	
Opening temperature		**79±2 °C**	
Close off temperature		**94 °C**	
Valve travel when fully open		**7.5 mm**	
Radiator		Vertical tube and Aluminium fins	
Fan		Suction, steel, 6 blades	
Water temperature gauge		Three colored sectors	
Temperature range for each sector:			
- white sector		**0 - 40 °C**	
- green sector		**40 - 112 °C**	
- red sector		**112 - 120 °C**	

Fuel system

Fuel feed pump		Double diaphragm	
Operation		Engine driven	
Minimum fuel flow at **1600 RPM** shaft speed		**100 L/hour**	
Drive shaft eccentricity		**3 mm**	
Fuel pump drive Shaft journal dia		**31.975 - 32.000 mm**	
Bushing fitted I.D. after reaming		**32.050 - 32.075 mm**	
Shaft clearance in bushing		**0.050 - 0.100 mm**	
Bushing interference fit in housing		**0.063 - 0.140 mm**	
Inner washer thickness		**1.45 - 1.50 mm**	
Outer washer thickness		**2.93 - 3.00 mm**	
Injection pump		Distributor, integral governor and advance device	
- BOSCH			
	55 Hp	**60 Hp**	**65 Hp**
	0460423063 (with LDA) 0460423079 (without LDA)	(0460423072) With KSB (0460423076) Without KSB **75 Hp** (0460423075) With KSB (0460423078) Without KSB	0460423073 With KSB (0460423077) Without KSB

Download full manual at youfixthis.com
PREVIEW - YOUFIXTHIS.COM

Contents

Engine 10

[10.001] Engine and crankcase 10.1

[10.102] Pan and covers 10.2

[10.106] Valve drive and gears 10.3

[10.101] Cylinder heads 10.4

[10.105] Connecting rods and pistons 10.5

[10.103] Crankshaft and flywheel 10.6

[10.210] Lift pump and lines 10.7

[10.206] Fuel filters 10.8

[10.218] Fuel injection system 10.9

[10.202] Air cleaners and lines 10.10

[10.250] Turbocharger and lines 10.11

[10.400] Engine cooling system 10.12

[10.414] Fan and drive 10.13

[10.310] Aftercooler 10.14

[10.304] Engine lubrication system 10.15

[10.408] Oil cooler and lines 10.16

Clutch 18

[18.110] Clutch and components 18.1

Transmission 21

[21.114] Mechanical transmission 21.1

[21.112] Power shuttle transmission 21.2

[21.110] Master clutch housing 21.3

[21.134] Power shuttle transmission external controls 21.4

[21.154] Power shuttle transmission internal components 21.5

[21.120] Gearbox 21.6

PREVIEW - YOUFIXTHIS.COM

Download full manual at youfixthis.com

[21.126] Gearbox external controls 21.7
[21.145] Gearbox internal components 21.8
[21.160] Creeper 21.9
[21.162] Reverser 21.10
[21.168] Hi-Lo unit 21.11
[21.200] Dropbox 21.12
Front axle system 25
[25.100] Powered front axle 25.1
[25.102] Front bevel gear set and differential 25.2
[25.108] Final drive hub, steering knuckles, and shafts 25.3
[25.400] Non-powered front axle 25.4
Rear axle system 27
[27.100] Powered rear axle 27.1
[27.106] Rear bevel gear set and differential 27.2
[27.120] Planetary and final drives 27.3
Power Take-Off (PTO) 31
[31.114] Two-speed rear Power Take-Off (PTO) 31.1
Brakes and controls 33
[33.120] Mechanical service brakes 33.1
[33.202] Hydraulic service brakes 33.2
[33.110] Parking brake or parking lock 33.3
Hydraulic systems 35
[35.000] Hydraulic systems 35.1
[35.104] Fixed displacement pump 35.2
[35.204] Remote control valves 35.3
[35.100] Main lift system 35.4
Steering 41
[41.101] Steering control 41.1

PREVIEW - YOUFIXTHIS.COM

Download full manual at youfixthis.com

Engine - 10

Turbocharger and lines - 250

Farmall® 55JXM
Farmall® 65JXM
Farmall® 75JXM

PREVIEW - YOUFIXTHIS.COM

Download full manual at youfixthis.com

13. Loosen and remove the 4 mounting bolts (2 on either side) **(1)**, and remove steering housing **(2)**.

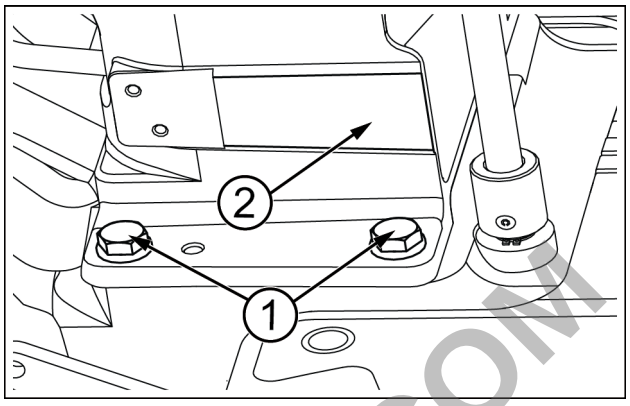

GNIL14TR02232AA 11

14 Remove roll pin **(1)**, and remove the handle **(2)** of 4WD control lever.

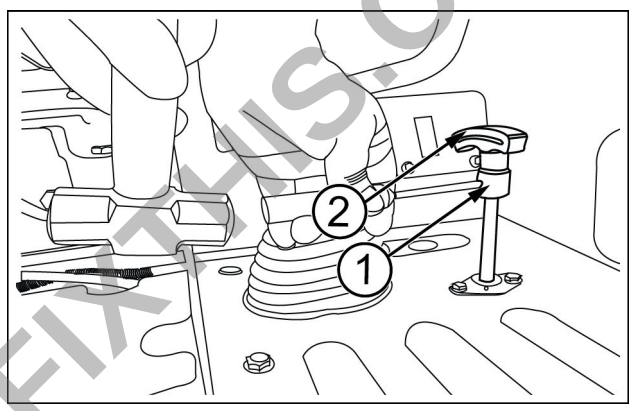

GNIL14TR02233AA 12

15 Remove roll pin **(1)**, of foot throttle pedal, and remove the outer pedal **(2)**

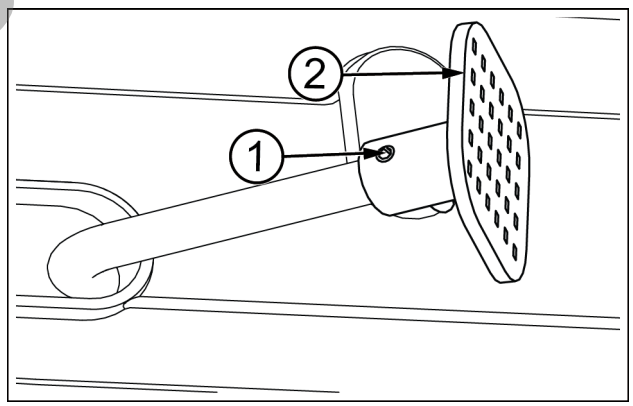

GNIL14TR02234AA 13

16. Remove the plastic locks **(1)** using a screw driver, and remove mats **(2)** of tractor from both LH and RH side.

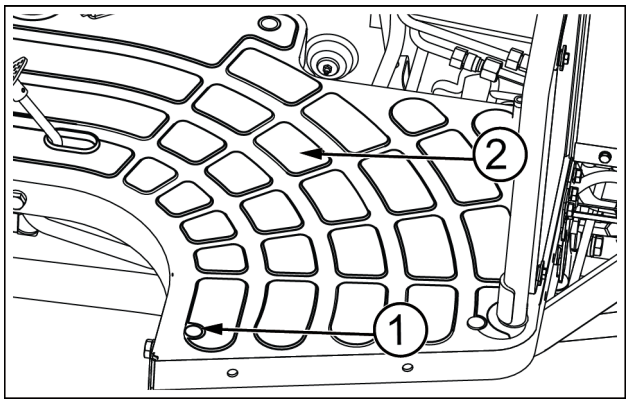

GNIL14TR02235AA 14

PREVIEW - YOUFIXTHIS.COM

Download full manual at youfixthis.com

Differential - Adjust

Farmall® 55JXM 5510 CASE 2WD Tier 3 ROPS	ANZ --- APAC --- MEA
Farmall® 55JXM 5510 CASE 4WD TIER 3 ROPS	ANZ --- APAC --- MEA
Farmall® 65JXM TIER 3 2WD	ANZ --- APAC --- MEA
Farmall® 65JXM TIER 3 4WD	ANZ --- APAC --- MEA
Farmall® 75JXM TIER 3 2WD	ANZ --- APAC --- MEA
Farmall® 75JXM TIER 3 4WD	ANZ --- APAC --- MEA

FRONT AXLE DIFFERENTIAL

NOTICE: *When overhauling the differential assembly it is necessary to adjust the backlash between the teeth of the planet pinions and the side gears.*

Proceed as follows:

1. Thoroughly clean the components of the differential to remove any traces of oil which would otherwise prevent accurate backlash measurement.
2. Install the two side gears without thrust washers.
3. Fit the planet pinions complete with thrust washers and pins and screw the pin retaining bolts in by a few turns sufficient to hold the pins in place.
4. Position a dial gauge on the differential housing, as shown in **1**.
5. Move the left-hand side gear to bring it into full contact with the planet pinion and then push it up against the differential housing, reading the end float (Gs) on the dial gauge.
6. Repeat the above operations to measure the End float on the right-hand side gear (Gd). The end float should be **0.25 mm** (**0.0098 in**). Therefore the shims to be inserted in the differential housing are given by: Ss = Gs -- **0.25 mm** (**0.0098 in**) for the left—hand side gear; Sd = Gd -- **0.25 mm** (**0.0098 in**) for the right-hand side gear.
7. Install shims as near as possible to the calculated value and, using a dial gauge and following the procedure described above; check that the end float of the left and right -- hand side gears is approximately **0.25 mm** (**0.0098 in**).

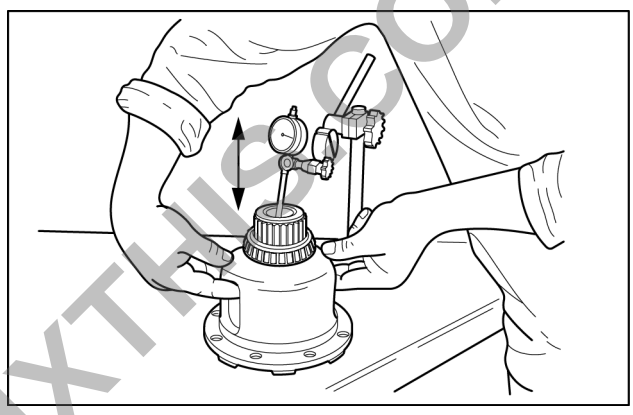

NDIL14TR00432AA 1

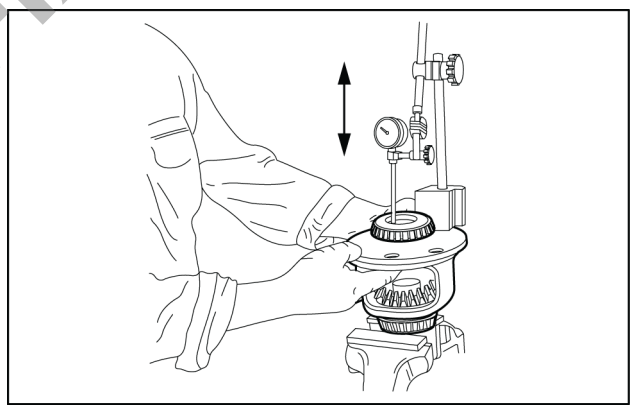

NDIL14TR00431AA 2

PREVIEW - YOUFIXTHIS.COM

Download full manual at youfixthis.com

Brakes - Adjust

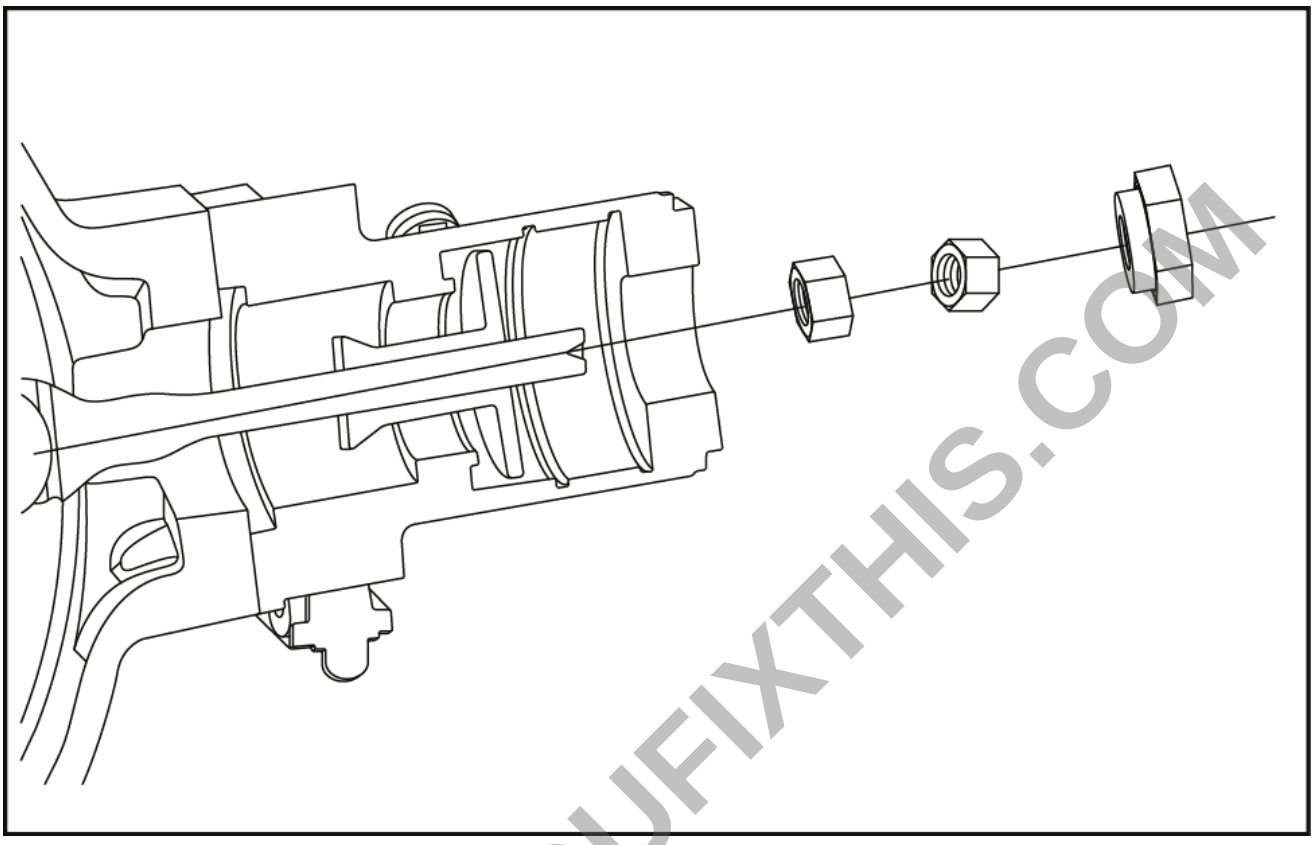

GNIL16TRO0312FA 1

1. Remove protecting cap **(1)**, figure **1**, from the brake cylinder.
2. Hold the inner nut **(3)** and loosen the outer nut **(2)**, figure **1** by 3 to 4 rotation with the help of special tool.
3. Tighten the inner nut to a torque of **8.0 N·m** (**70.8 lb in**) with the help of special tool, figure **2**.
4. Now loosen the inner nut by unscrewing it to the following number of turns
   55 & 60 Hp - 2 Discs - 1.25 Turn
   65 & 75 Hp - 3 Discs - 1.5 Turn

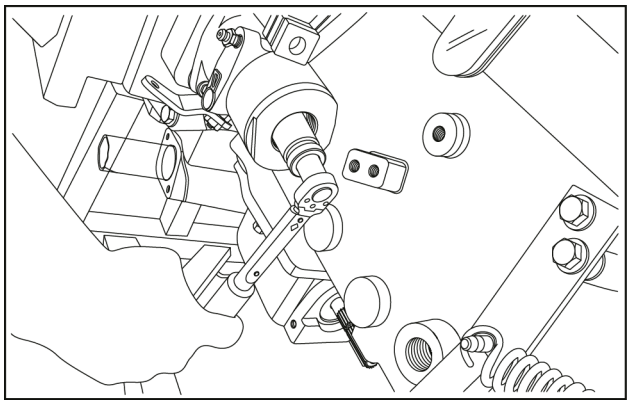

GNIL16TRO0313AA 2

5. Verify drag torque with the help of digital torque wrench at the center of wheel it should be less than **70.0 N·m** (**619.6 lb in**).

PREVIEW - YOUFIXTHIS.COM

Download full manual at youfixthis.com

Steering circuit relief valve - Adjust

Farmall® 55JXM 5510 CASE 2WD Tier 3 ROPS	ANZ --- APAC --- MEA
Farmall® 55JXM 5510 CASE 4WD TIER 3 ROPS	ANZ --- APAC --- MEA
Farmall® 65JXM TIER 3 2WD	ANZ --- APAC --- MEA
Farmall® 65JXM TIER 3 4WD	ANZ --- APAC --- MEA
Farmall® 75JXM TIER 3 2WD	ANZ --- APAC --- MEA
Farmall® 75JXM TIER 3 4WD	ANZ --- APAC --- MEA

NOTE: *To adjust the steering system relief valve it is necessary to remove the steering motor from the steering bracket, to gain access to the hexagon headed adjusting screw.*

1. Disconnect the steering motor from the steering bracket.
2. Fabricate suitable test hose to connect pump pipeline to steering motor. Connect locally procured 'T' joint between test hose and steering motor and Install pressure gauge.
3. Block the plug connections to steering cylinder with suitable blanking cap.
4. Connect the return hose normally. If required connect with extra hose and suitable adopter.
5. Start the engine and idle between **1450 RPM** and **1500 RPM**. Run the tractor until the transmission oil reaches normal working temperature.
6. With the engine running, turn the steering motor shaft to obtain full lock. The pressure gauge reading should read **120 bar**.
7. If the pressure readings are not correct, reset the adjuster **(11)** , using an **8 mm** hexagon key

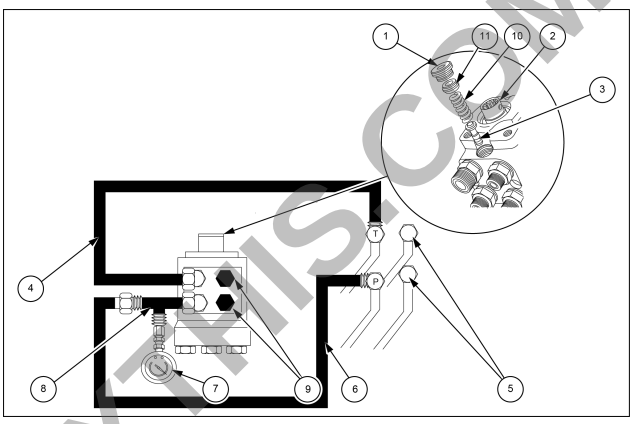

NDIL14TR00727FB 1

1.Plug 2.Steering shaft 3.Relief valve 4.Fabricated Steering Motor Output Hose 5.Tractor tubes to steering cylinder 6.Fabricated hose for pump supply to steering motor 7.Pressure gauge **0 - 5000 lbf** per square inches 8.Swivel running Tee 9.Blanking Cap 10.Spring 11.Adjuster

PREVIEW - YOUFIXTHIS.COM

Download full manual at youfixthis.com

PREVIEW ONLY

You're viewing 25 of 815 pages

The full manual includes:

- All 815 pages, complete
- Searchable PDF (find any keyword)
- No watermarks
- Instant download
- Print-ready quality

GET FULL MANUAL NOW

Case IH 55JXM, 65JXM, 75JXM, Farmall 55JXM, Farmall 65JXM, Farmall 75JXM Service Manual

Scan or click anywhere
youfixthis.com

Click anywhere on this page to get the full manual