ELECTRICAL POWER SYSTEM - Wiring schema Charging circuit

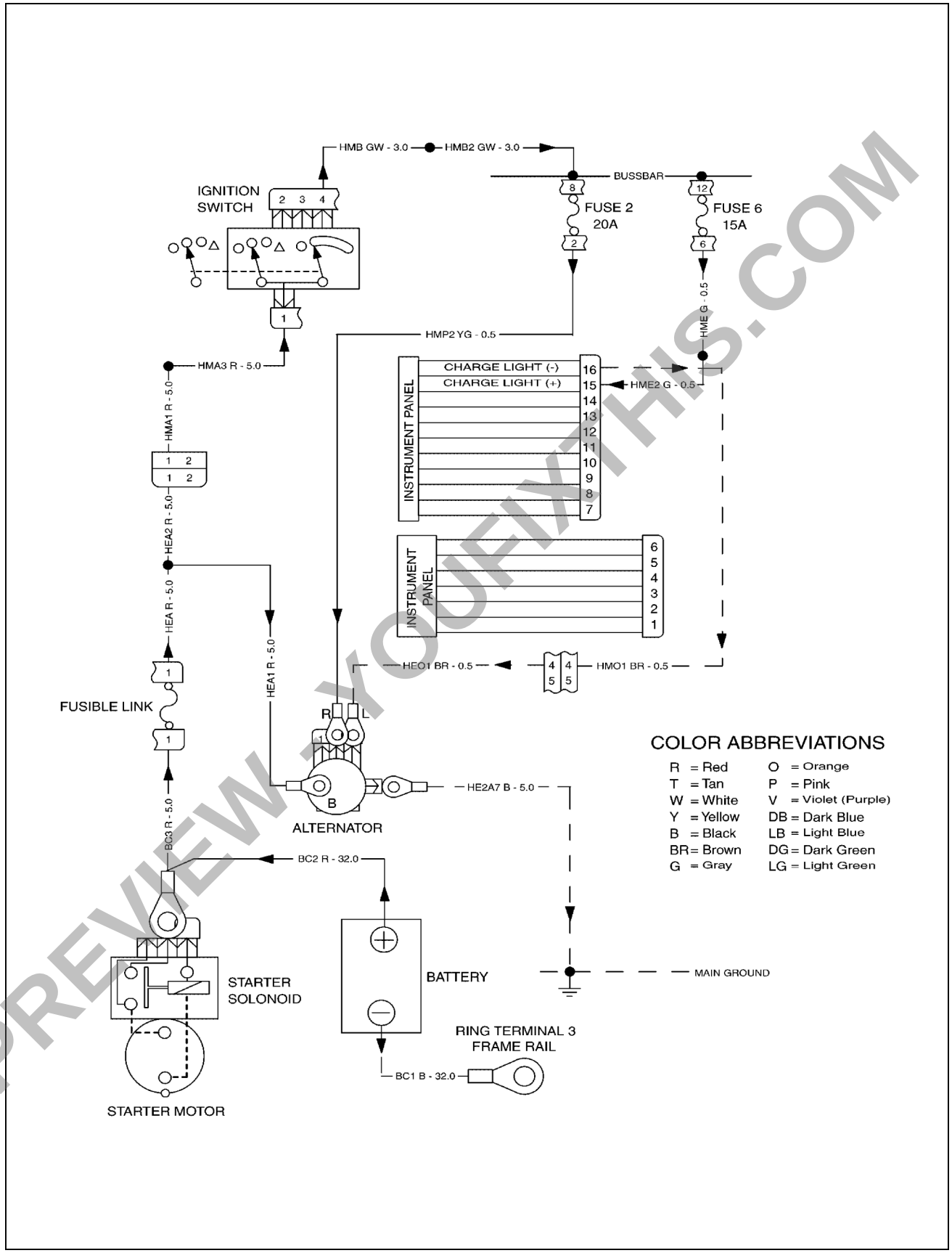

20098815 1

PREVIEW - YOUFIXTHIS.COM

Download full manual at youfixthis.com

PRIMARY HYDRAULIC POWER SYSTEM - Hydraulic schema Open center hydraulic circuit and mechanical lift

With reference to Figures **1** and **2**.

High pressure pump is directly connected on rear side of engine timing gear. Oil is drawn from transmission housing through filter. The pump supplies constant oil flow according to engine speed through remote control valve. Oil after passing through remote, enters the distributor oil located at the front of the lift assembly, which controls the raising and lowering of the lift.

All excess oil flow produced by the hydraulic pump is returned direct to the rear axle through the control valve spool located in the hydraulic lift distributor.

Also located within the distributor is the lift cylinder safety valve, which protects the lift cylinder and seals from excessive peaks of pressure during operation.

For further details on operation of the mechanical hydraulic lift assembly, refer to the **PRIMARY HYDRAULIC POWER SYSTEM - Dynamic description (A.10.A)** in this Section of the Repair Manual.

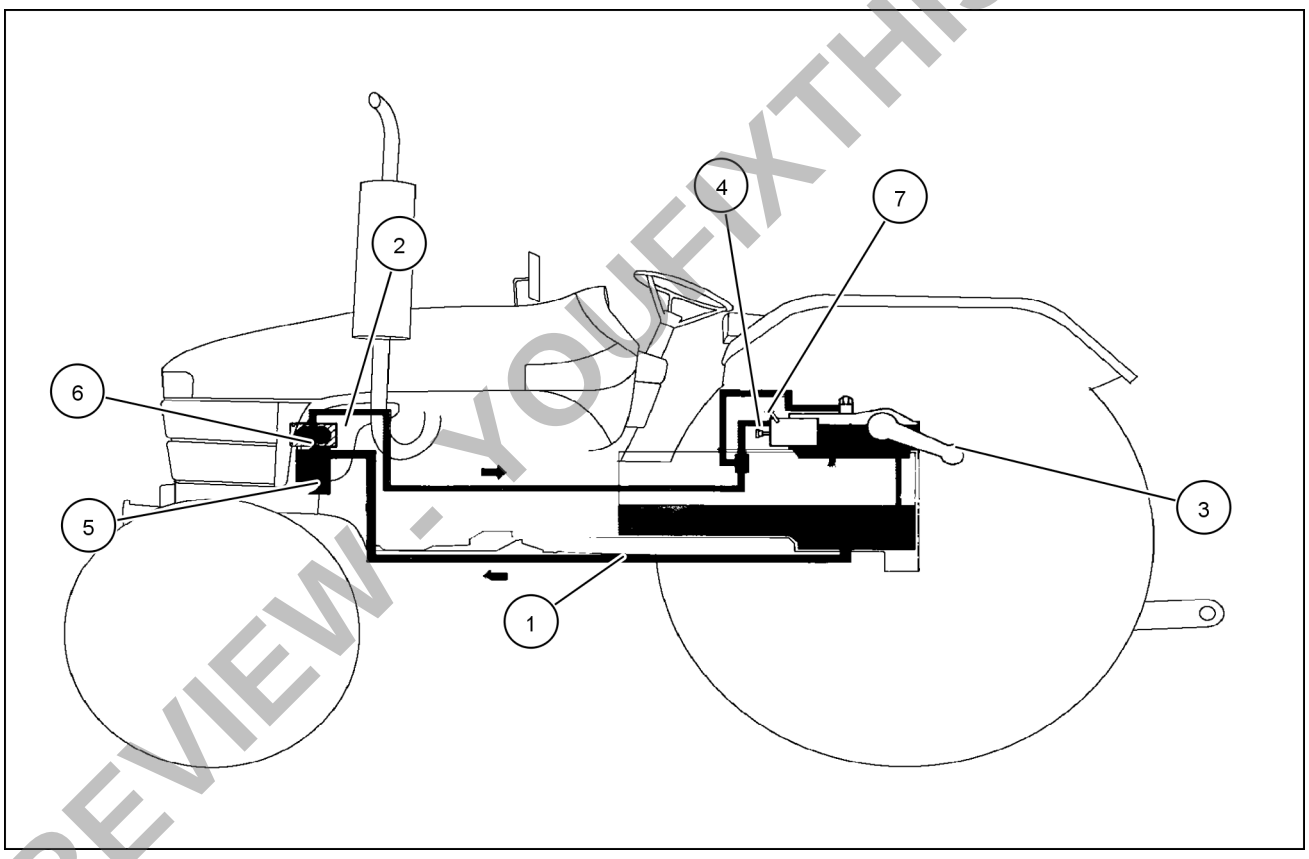

20098850 1

1. Suction line drawing from Transmission housing
2. Delivery line to control valve
3. Lift arm
4. Control valve
5. Oil filter
6. Hydraulic pump
7. Relief valve

PREVIEW - YOUFIXTHIS.COM

Download full manual at youfixthis.com

Torque Specification Tables

Standard Bolt Hardware & Hydraulic Connector Torques, Specifications and Information

This specification establishes general torque values to be used in bolted joints for metric and inch hardware. This specification is assumed to apply unless another specification (standard or specified requirement) is indicated in the repair manual.

NOTE: These Standards do not include electrical or hydraulic components, they are referred to in their specific charts or tables.

INCH 'NON-FLANGED' HARDWARE AND LOCKNUTS {MINIMUM HARDWARE TIGHTENING TORQUES}

IN NEWTON-METERS (FOOT-POUNDS) FOR NORMAL ASSEMBLY APPLICATIONS								
	SAE GRADE 2		SAE GRADE 5		SAE GRADE 8		LOCKNUTS	
Nominal Size	Unplated or Plated Silver	Plated w/ZnCr Gold	Unplated or Plated Silver	Plated w/ZnCr Gold	Unplated or Plated Silver	Plated w/ZnCr Gold	Gr.B w/Gr5 Bolt	Gr.C w/Gr8 Bolt
1/4	6.2 (55)*	8.1 (72)*	9.7 (86)*	13 (112)*	14 (121)*	18 (157)*	8.5 (75)*	12.2 (109)*
5/16	13 (115)*	17 (149)*	20 (178)*	26 (229)*	28 (21)	37 (27)	17.5 (155)*	25 (220)*
3/8	23 (17)	30 (22)	35 (26)	46 (34)	50 (37)	65 (48)	31 (23)	44 (33)
7/16	37 (27)	47 (35)	57 (42)	73 (54)	80 (59)	104 (77)	50 (37)	71 (53)
1/2	57 (42)	73 (54)	87 (64)	113 (83)	123 (91)	159 (117)	76 (56)	108 (80)
9/16	81 (60)	104 (77)	125 (92)	163 (120)	176 (130)	229 (169)	111 (82)	156 (115)
5/8	112 (83)	145 (107)	174 (128)	224 (165)	244 (180)	316 (233)	153 (113)	215 (159)
3/4	198 (146)	256 (189)	306 (226)	397 (293)	432 (319)	560 (413)	271 (200)	383 (282)
7/8	193 (142)	248 (183)	495 (365)	641 (473)	698 (515)	904 (667)	437 (323)	617 (455)
1	289 (213)	373 (275)	742 (547)	960 (708)	1048 (773)	1356 (1000)	654 (483)	924 (681)

NOTE: Torque values shown with * are inch pounds.

NOTICE: *Values shown on these charts are minimum hardware tightening torques unless otherwise stated.*

METRIC 'NON-FLANGED' HARDWARE AND LOCKNUTS {MINIMUM HARDWARE TIGHTENING TORQUES}

IN NEWTON-METERS (FOOT-POUNDS) FOR NORMAL ASSEMBLY APPLICATIONS							
	CLASS 5.8		CLASS 8.8		CLASS 10.9		LOCK-NUTS
Nominal Size	Unplated	Plated w/ZnCr	Unplated	Plated w/ZnCr	Unplated	Plated w/ZnCr	Cl.8 w/Cl8.8 Bolt
M4	1.7 (15)*	2.2 (19)*	2.6 (23)*	3.4 (30)*	3.7 (33)*	4.8 (42)*	2.3 (20)*
M6	5.8 (51)*	7.6 (67)*	8.9 (79)*	12 (102)*	13 (115)*	17 (150)*	7.8 (69)*
M8	14 (124)*	18 (159)*	22 (195)*	28 (21)	31 (23)	40 (30)	19 (169)*
M10	28 (21)	36 (27)	43 (32)	56 (41)	61 (45)	79 (58)	38 (28)
M12	49 (36)	63 (46)	75 (55)	97 (72)	107 (79)	138 (102)	66 (49)
M16	121 (89)	158 (117)	186 (137)	240 (177)	266 (196)	344 (254)	164 (121)
M20	237 (175)	307 (226)	375 (277)	485 (358)	519 (383)	671 (495)	330 (243)
M24	411 (303)	531 (392)	648 (478)	839 (619)	897 (662)	1160 (855)	572 (422)

NOTE: Torque values shown with * are inch pounds.

PREVIEW - YOUFIXTHIS.COM

Download full manual at youfixthis.com

PRIMARY HYDRAULIC POWER SYSTEM - Troubleshooting

Problem	Possible Cause	Correction
Lift fails to operate	Governor blocked open.	Remove foreign particles from drain holes and inspect filter.
	Inefficient pump.	Disassemble and inspect.
Erratic upward lift movement	Clogged oil filter.	Inspect filter and replace cartridge if necessary.
	Air entering suction line.	Check for faulty connections or seals.
Erratic upward lift movement	Oil leakage past spool seals.	Replace seals.
	Leakage past spool.	Remove, check for leakage, clean and replace damaged parts. Inspect filter.
	Check valve leakage.	Remove, inspect and clean.
	Leakage past lift piston Replace seals. Gland or lift cylinder seal.	Replace seals.
	Safety valve leakage or incorrect setting.	Replace valve.
Relief valve blows with lift arms in maximum. raised position	Lift arm travel adjustment error.	Adjust travel.
Insufficient or inaccurate lifting	Incorrect relief valve setting.	Replace or adjust.
	Incorrect safety setting.	Replace valve.
	Poor pump performance.	Check pump and overhaul or replace.

PREVIEW - YOUFIXTHIS.COM

Download full manual at youfixthis.com

PRIMARY HYDRAULIC POWER SYSTEM - Remove

Remove the hydraulic lift from the rear axle housing as follows:

⚠ WARNING ⚠

Handle all parts carefully. Do not put your hands or fingers between parts. Always wear suitable safety items such as fitted clothing, safety goggles, gloves, shoes, etc. Failure to comply could result in death or serious injury.

M954A

1. Remove operator's seat, **(1)**.

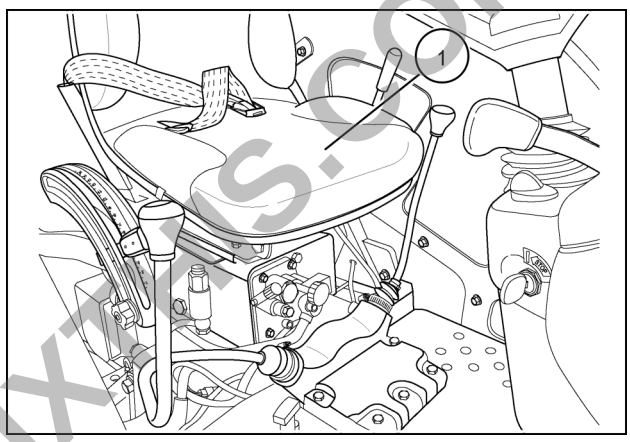

20098687 1

2. Remove three-point linkages, **(1)**, (top link and lift arms).

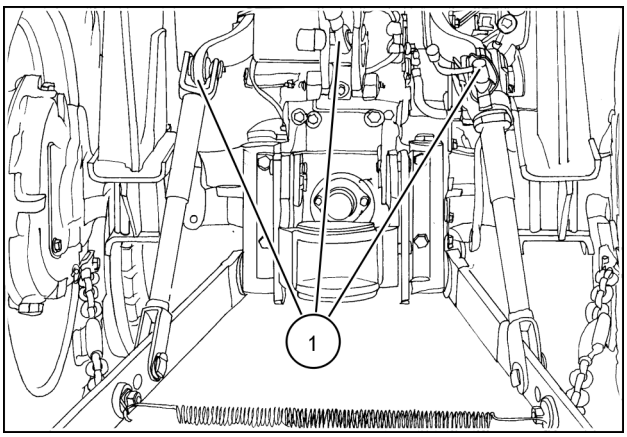

20098688 2

3. Disconnect oil supply line at, **(1)**, between remote control valve and distributor.

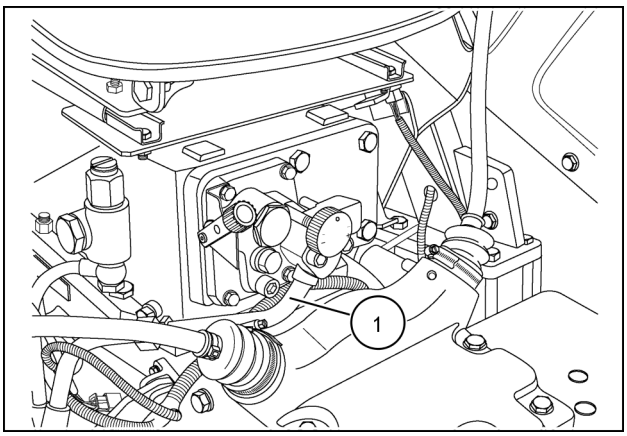

20098435 3

PREVIEW - YOUFIXTHIS.COM

Download full manual at youfixthis.com

Wiring harness - Wiring schema Safety start circuit - Operator present

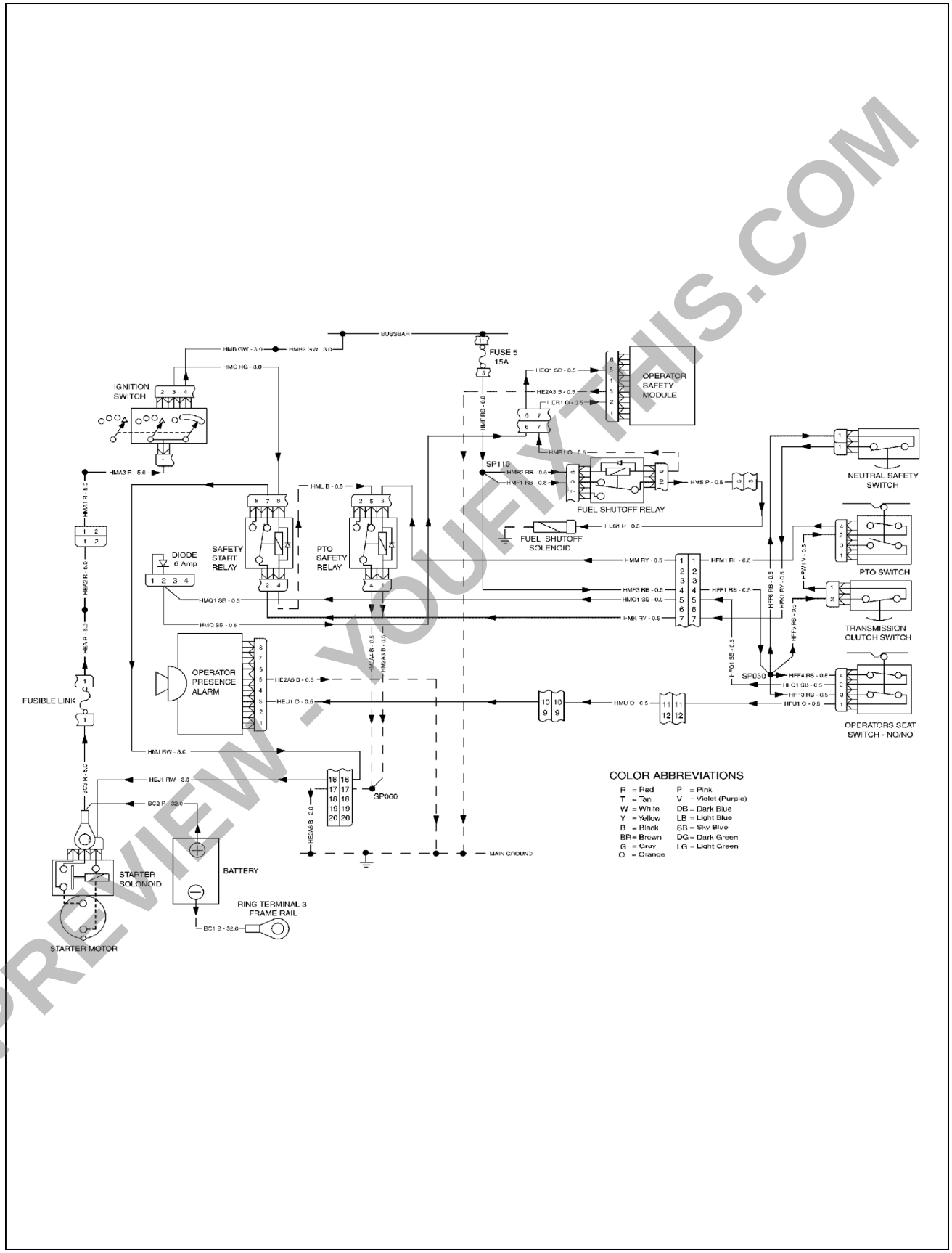

20098821 1

PREVIEW - YOUFIXTHIS.COM

Download full manual at youfixthis.com

HYDRAULIC CIRCUIT DIAGRAM

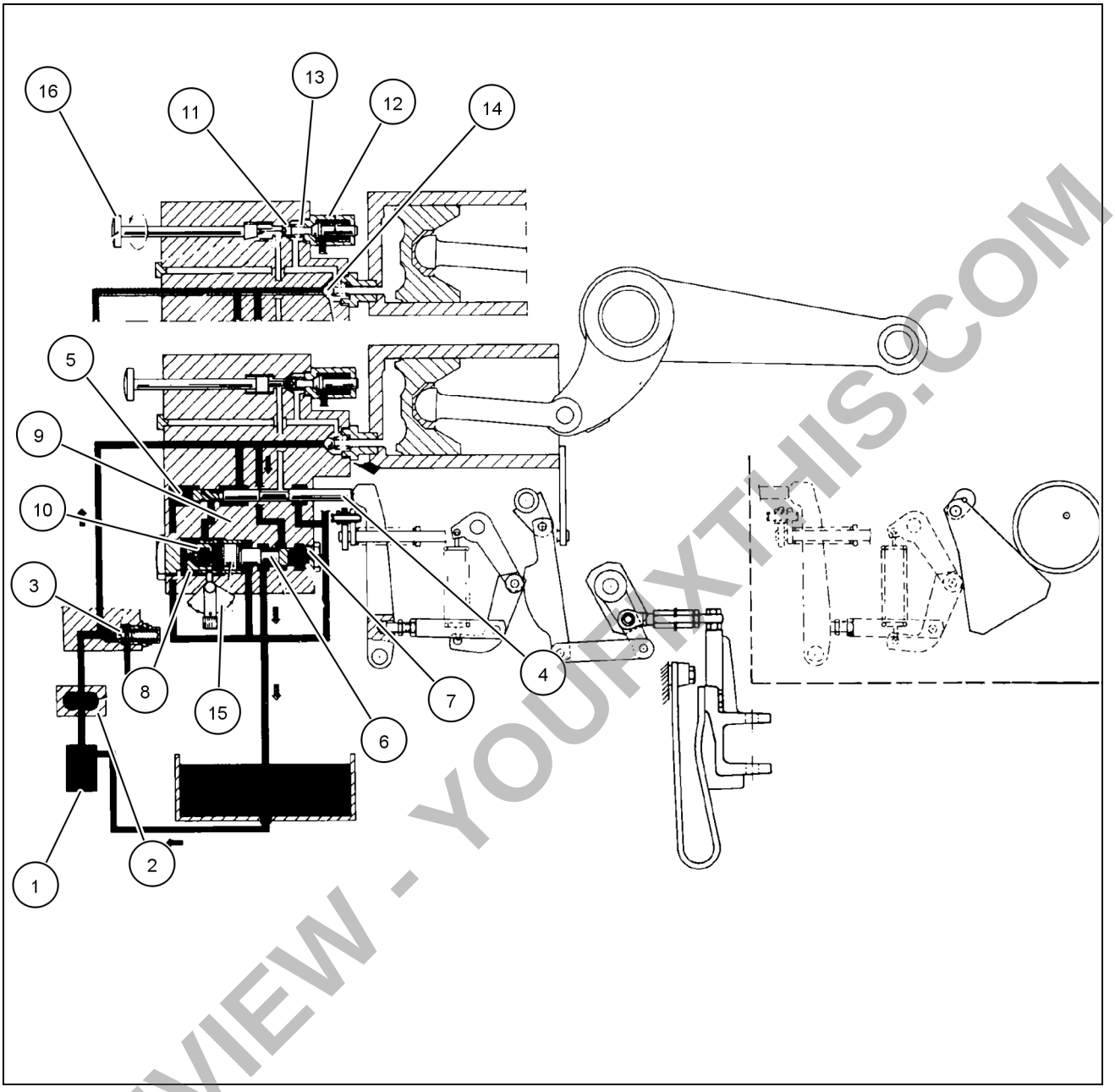

20098853 2

1. Filter
2. Hydraulic pump
3. Relief valve (installed on lift body or on remote control valve)
4. Spool
5. Spool return spring
6. Control valve plunger
7. Plunger spring
8. Control valve position seat
9. Control valve position
10. Sensitivity control valve
11. Ball
12. Cylinder saftey valve
13. Arm response adjacent valve
14. Check valve
15. Adjusting pipe lever
16. Arm response adjusting pin knob

PREVIEW - YOUFIXTHIS.COM

Download full manual at youfixthis.com

• under **3.60 - 4 kg** (**7.9 - 8.8 lb**)	**18 mm** (**0.71 in**)
Sensitivity adjustment pin lever outer spring length:	
• free	**20.5 mm** (**0.81 in**)
• under **6.3 - 6.9 kg** (**13.9 - 15.2 lb**)	**13.8 mm** (**0.54 in**)

PRIMARY HYDRAULIC POWER SYSTEM - General specification for Implement attachments

DESCRIPTION

Type	3 Point Linkage
Category	II
Draft control (If applicable)	Top Link Sensing
Max lift capacity with Lower links Horizontal:	**1525 kg** (**3362 lb**)

PRIMARY HYDRAULIC POWER SYSTEM - Torque

Description	Thread Size	Torque
Lift to Rear Transmission Housing Bolts	M14 x 1.50	**132 N·m** (**97 lb ft**)
Control Valve body to Lift Bolts	M8 x 1.25	**19 N·m** (**14 lb ft**)
Lift Arm Bolts	M14 x 1.5	**132 N·m** (**97 lb ft**)
Position Control Shaft(s) Nut	M10 x 1.25	**56 N·m** (**41 lb ft**)
Lever Bracket Nuts	M8 x 1.25	**19 N·m** (**14 lb ft**)
Internal Stroke Rod Allen Head Bolts	M14 x 1.50	**19 N·m** (**14 lb ft**)
Lift Body Front Cover Bolts	M14 x 1.50	**132 N·m** (**97 lb ft**)
Delivery Piping for Control Valve, Allen Head Screws	M10 x 1.25	**56 N·m** (**41 lb ft**)

PREVIEW - YOUFIXTHIS.COM

Download full manual at youfixthis.com

Alternator - Troubleshooting

Problem	Possible Cause	Correction
Alternator charging at high rate (battery overheating)	Defective alternator / Voltage regulator.	Check and replace.
No output from the alternator	Alternator drive belt broken.	Tension correctly (replace).
	Loose connection in the charging circuit.	Check, clean and tighten connections.
	Defective alternator.	Check and replace.
Intermittent or low alternator output	Alternator drive belt slipping.	Check and adjust tension and replace.
	Loose of broken connection in the charging circuit.	Inspect the circuit tighten the connections.
	Defective alternator.	Check and replace.

PREVIEW - YOUFIXTHIS.COM

Download full manual at youfixthis.com

PRIMARY HYDRAULIC POWER SYSTEM - Disassemble

Prior operation:
PRIMARY HYDRAULIC POWER SYSTEM - Remove (A.10.A)

⚠ WARNING ⚠

Handle all parts carefully. Do not put your hands or fingers between parts. Always wear suitable safety items such as fitted clothing, safety goggles, gloves, shoes, etc. Failure to comply could result in death or serious injury.

M954A

1. Remove external control levers as described earlier in **Command - Disassemble (A.10.D)**.

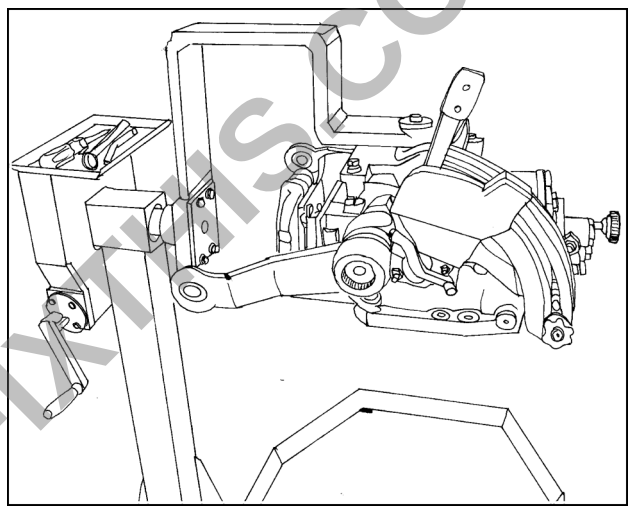

20098696 1

2. Loosen the Allen screws, **(1)**, and remove valve block assembly, **(2)**.

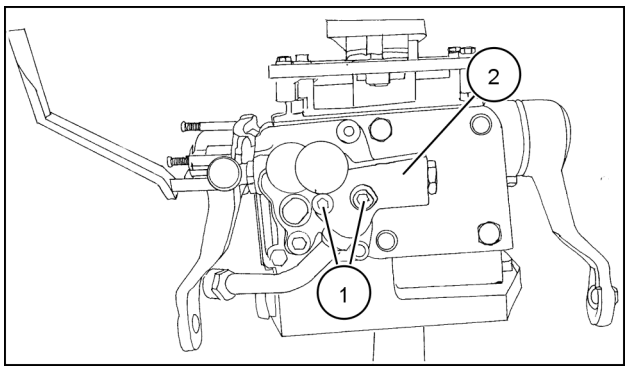

20098705 2

3. Remove pipe, **(1)**, and O-rings.

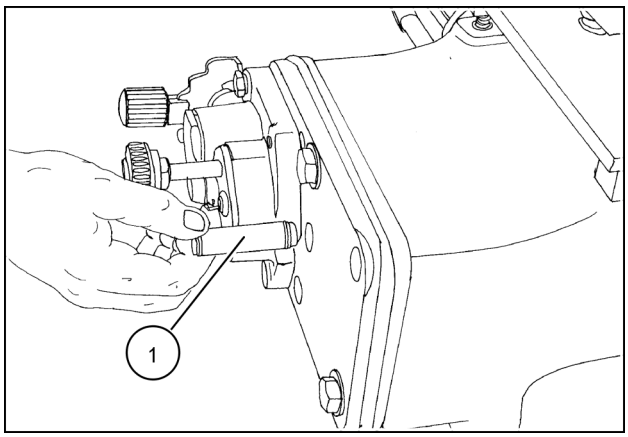

20098706 3

PREVIEW - YOUFIXTHIS.COM

Download full manual at youfixthis.com

Wiring harness - Wiring schema Safety circuit start circuit - Operator not present

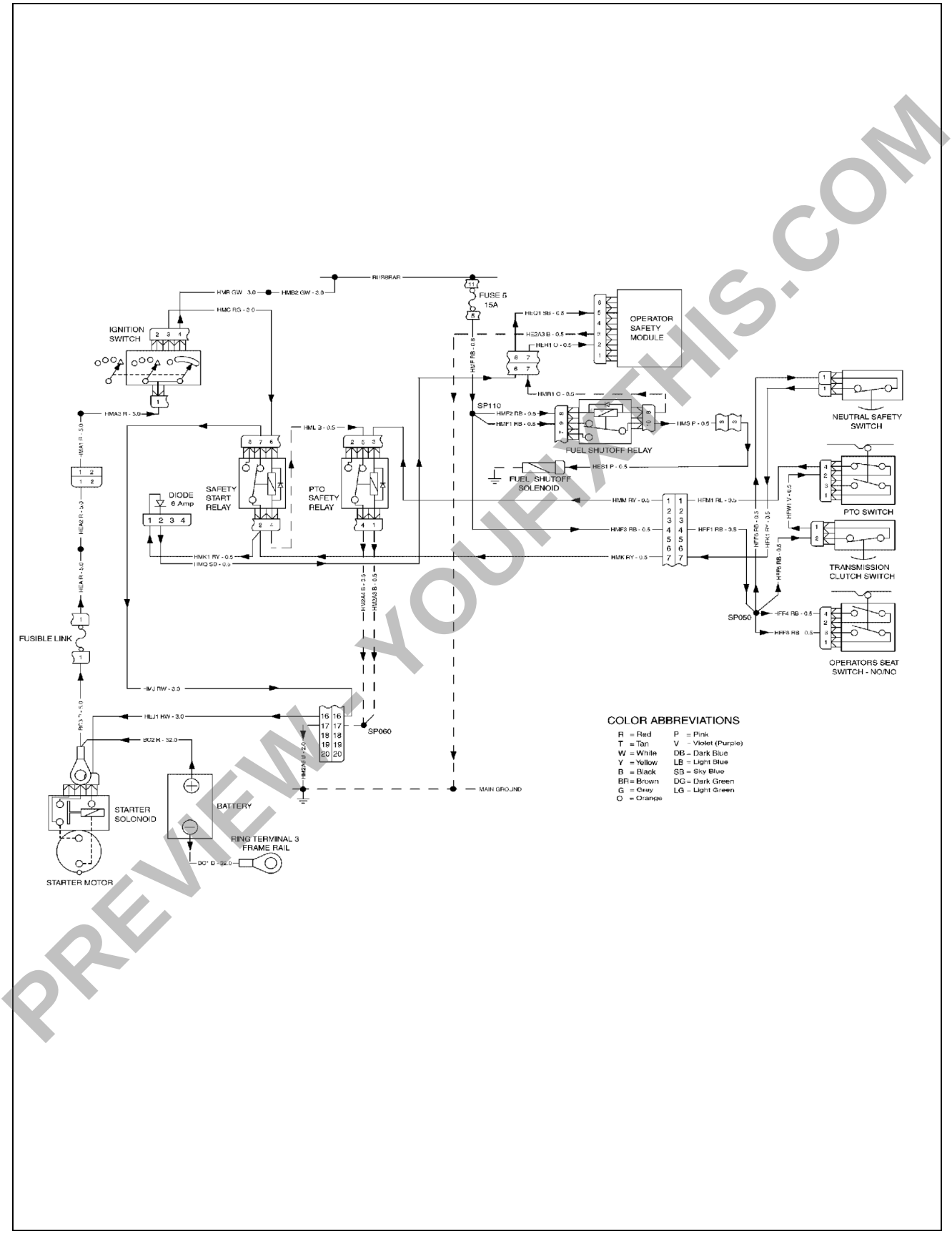

20098819 1

PREVIEW - YOUFIXTHIS.COM

Download full manual at youfixthis.com

Control valve - Dynamic description Operation Of Distributor

The Distributor is Pre-set to perform three phases:

1. Neutral Phase
2. Lifting Phase
3. Lowering Phase

Neutral Phase

In this phase the control valve keeps pressure on the oil coming from the pump to flow freely to the tank. In this phase the control spool, **(1)**, is in such a position, oil is delivered through sensitivity control valve, **(2)**, to piston, **(3)**, which overcomes spring, **(4)**, and moves plunger, **(5)**, to the right, thus opening discharge port and returns oil to transmission housing rather than to cylinder.

NOTE: *When travelling on the road with implements attached, fully unscrew knob, **(6)**, to block implement in desired positions; oil contained in cylinder remains trapped by check valve, **(7)**, and Response Control valve, **(8)**. Arms therefore remain blocked, even if operator accidentally moves lift Control levers. Cylinder safety valve, **(9)**, protects lift cylinder pressure circuit while relief valve, **(10)**, protects pump circuit.*

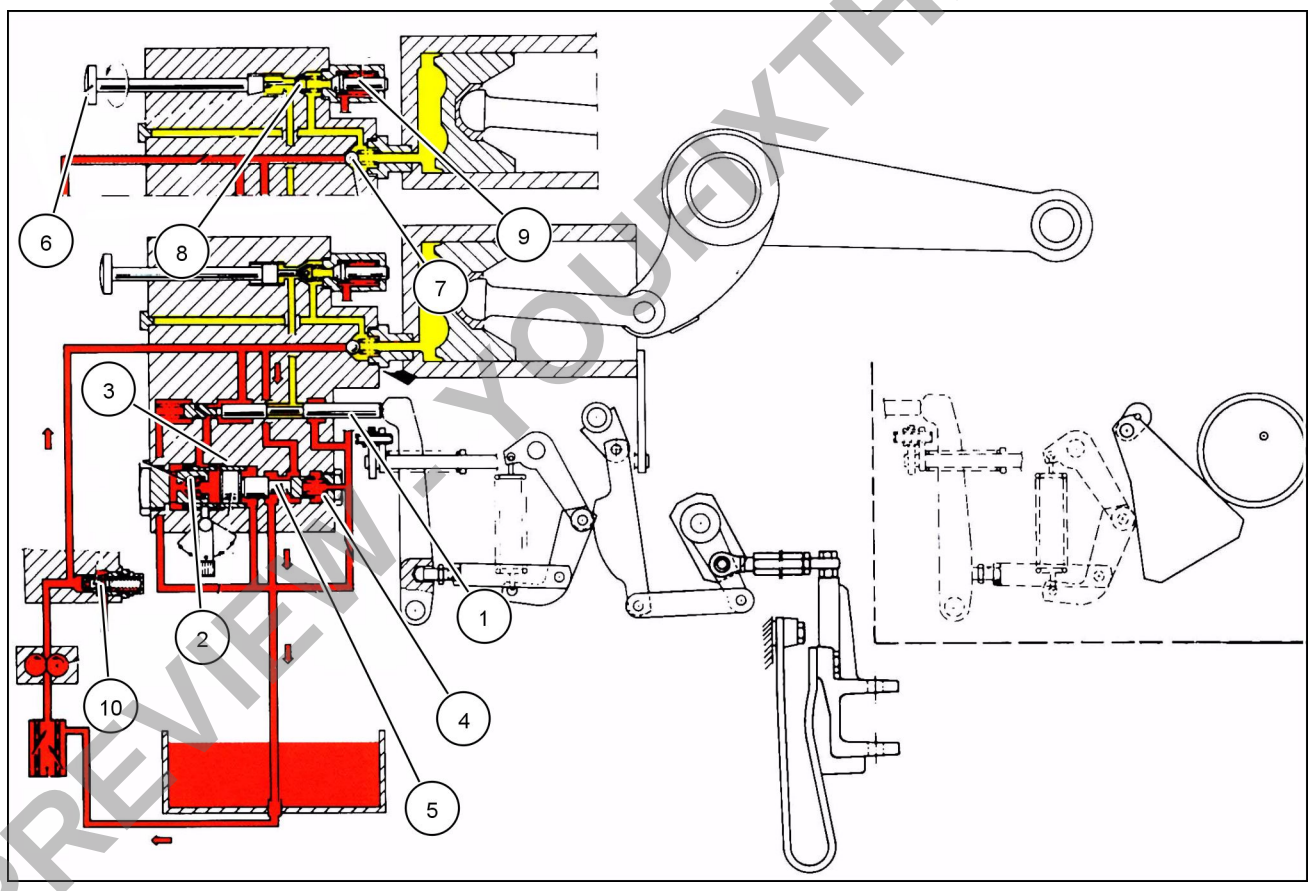

20098420 1

PREVIEW - YOUFIXTHIS.COM

Download full manual at youfixthis.com

Hydraulic pump - Torque

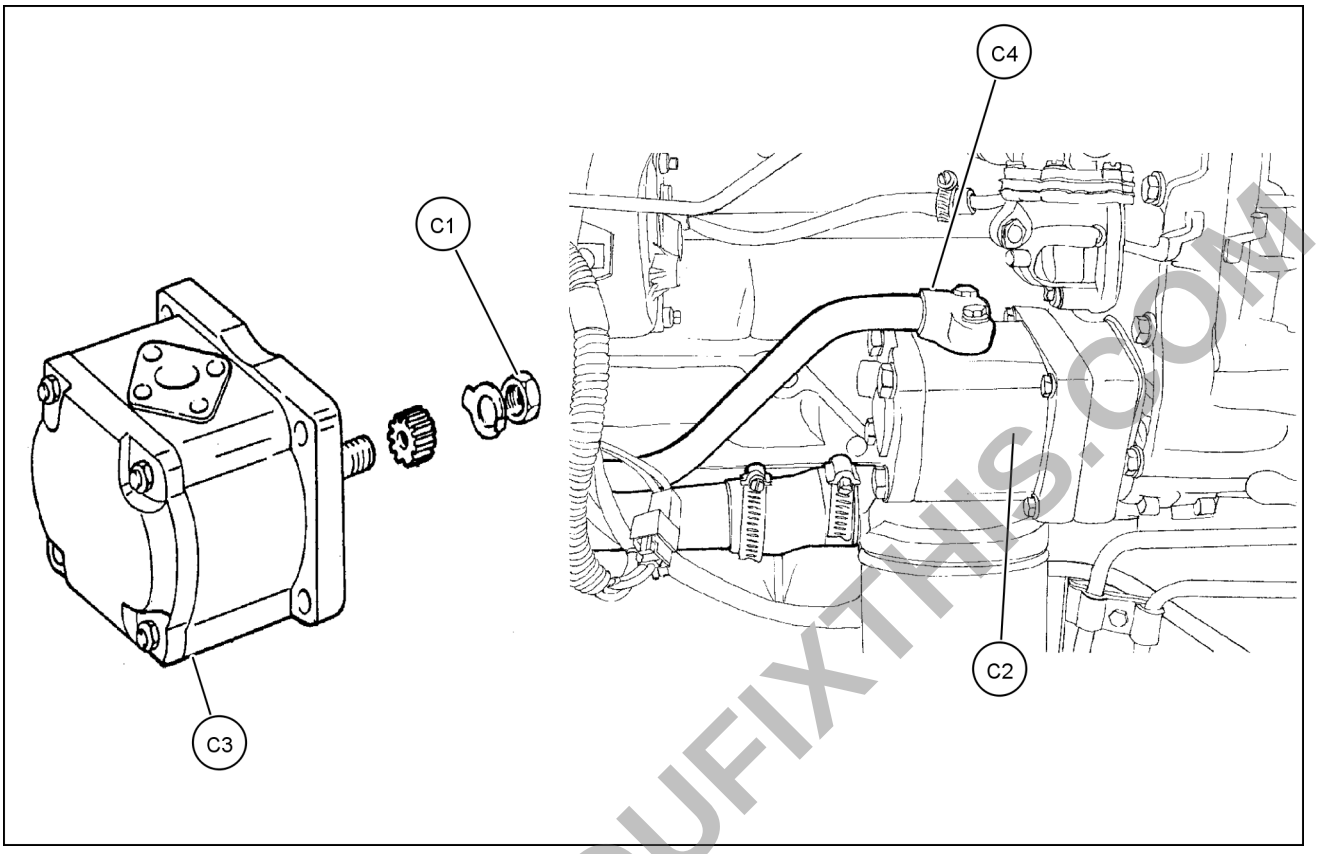

20098843 1

Description	Thread size	Torque
Nut, pump drive gear, **(C1)**	7/16 - 20	**47.5 N·m** (**35.0 lb ft**)
Nut, pump mounting on timing case, **(C2)**	M6 x 1	**8 N·m** (**5.9 lb ft**)
Bolt, pump cover, **(C3)**	M10 x 1.25	**58 N·m** (**42.8 lb ft**)
Bolt, delivery pipe to pump, **(C4)**	M6 x 1	**10 N·m** (**7.4 lb ft**)

Hydraulic pump - Special tools

Tool Description	Tool No.
Adapter, hydraulic pressure checking	380002742

PREVIEW - YOUFIXTHIS.COM

Download full manual at youfixthis.com

Wiring harness - Troubleshooting Safety start circuit - Operator present

Problem	Possible Cause	Correction
Starter motor will not energize.	Insufficient battery charge.	Test battery. Charge, add water, or replace as necessary.
	Blown fusible link.	Inspect and replace fusible link as necessary.
	Defective key switch.	Test key switch and replace as necessary.
	Defective PTOsafety or safety start relay.	Test relays and replace as necessary.
	Malfunctioning safety start switch.	Test neutral range, main PTO, and seat safety start switches for adjustment, proper operation, and faulty ground circuits.
	Malfunctioning starter motor.	Test starter motor and repair or replace as necessary.
Starter motor energizes, but fails to start engine (lacks exhaust smoke)	Blown #5, **15 A** fuse.	Replace fuse.
	Defective operator safety module.	Test module and replace as necessary.
	Defective fuel shutoff relay.	Test fuel shutoff relay and replace as necessary.
	Malfunctioning fuel shutoff solenoid.	Test fuel shutoff solenoid and replace as necessary.

Wiring harness - Troubleshooting Safety start circuit - Operator not present

Problem	Possible Cause	Correction
Starter motor will not energize.	Insufficient battery charge.	Test battery. Charge, add water, or replace as necessary.
	Blown fusible link.	Inspect and replace fusible link as necessary.
	Defective key switch.	Test key switch and replace as necessary.
	Defective PTO safety or safety start relay.	Test relays and replace as necessary.
	Malfunctioning safety start switch.	Test neutral range, main PTO, and brake safety start switches for adjustment, proper operation, and faulty ground circuits.
	Defective start circuit diode.	Test start circuit diode and replace as necessary.Operator must be out of seat for test.
	Malfunctioning starter motor.	Test starter motor and repair or replace as necessary.
Starter motor energizes, but fails to start engine (lacks exhaust smoke)	Blown #5, **15 A** fuse.	Replace fuse.
	Defective operator safety module.	Test module and replace as necessary.
	Defective fuel shutoff relay.	Test fuel shutoff relay and replace as necessary.
	Malfunctioning fuel shutoff solenoid.	Test fuel shutoff solenoid and replace as necessary.

Wiring harness - Troubleshooting Safe Operation - Operator Present

Problem	Possible Cause	Correction
Engine does not continue to run while operator is seated	Defective seat safety switch.	Test seat safety switch and replace as necessary.
	Defective Fuel shutoff relay.	Test relay and replace as necessary.

PREVIEW - YOUFIXTHIS.COM

Download full manual at youfixthis.com

PRIMARY HYDRAULIC POWER SYSTEM - Assemble

Prior operation:
PRIMARY HYDRAULIC POWER SYSTEM - Disassemble (A.10.A)

NOTE: *Check O-rings and needle bearing for wear and damage.*

NOTE: *See* ***Command - Adjust (A.14.A)*** *for Position and Draft control adjustments.*

1. Install shaft, **(1)**, through housing.
2. Insert lever, **(2)**, onto shaft coming through housing and secure the lever to the shaft with coned shaped bolt, **(3)**.

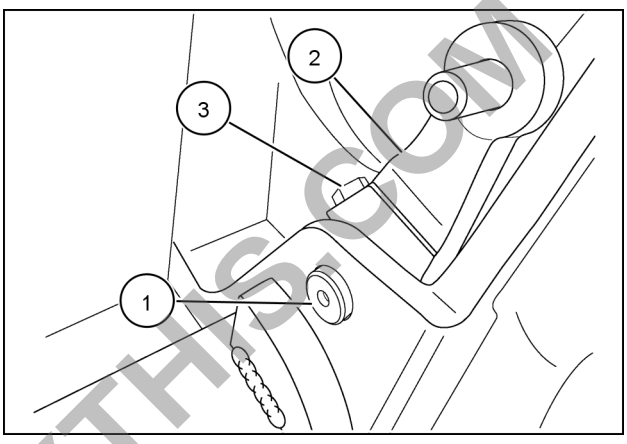

20098717 1

3. Install lever shaft, **(1)**, through housing at location shown.

NOTE: *It is necessary for the cylinder sleeve to be forward in order to install the shaft.*

4. Install position control lever, **(2)** and secure with safety clip, **(3)**.

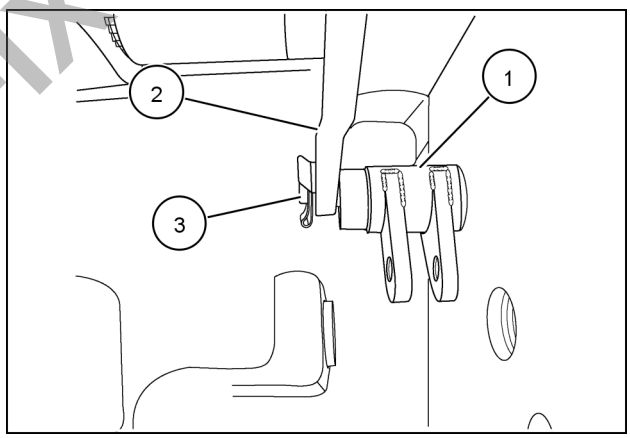

20098721 2

5. Install fitting, **(1)**, with washer, **(2)**, if fitting was removed.
6. Install a new O-ring, **(3)**, onto shaft.
7. Install snap ring, **(4)**, onto shaft.

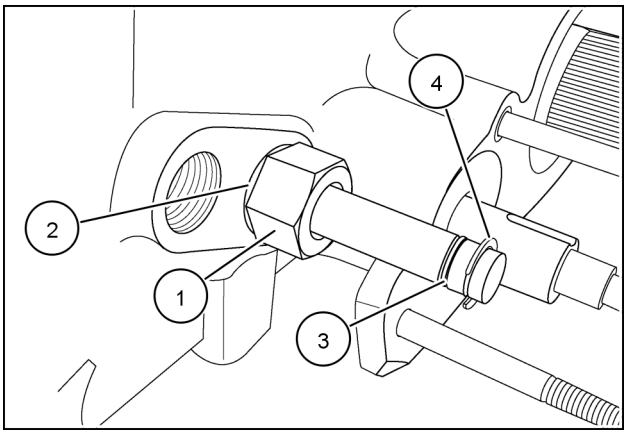

20098722 3

PREVIEW - YOUFIXTHIS.COM

Download full manual at youfixthis.com

Contents

INTRODUCTION

HYDRAULIC - PNEUMATIC - ELECTRICAL - ELECTRONIC SYSTEMSA

PRIMARY HYDRAULIC POWER SYSTEM A.10.A

PRIMARY HYDRAULIC POWER SYSTEM Open center mechanical remote valve A.10.D

HYDRAULIC COMMAND SYSTEM A.14.A

ELECTRICAL POWER SYSTEM A.30.A

LIGHTING SYSTEM A.40.A

ENGINE AND PTO IN ..... B

ENGINE B.10.A

FUEL AND INJECTION SYSTEM B.20.A

AIR INTAKE SYSTEM B.30.A

ENGINE COOLANT SYSTEM B.50.A

LUBRICATION SYSTEM B.60.A

STARTING SYSTEM B.80.A

TRANSMISSION, DRIVE AND PTO OUT C

POWER COUPLING Clutch C.10.C

TRANSMISSION Mechanical C.20.B

REAR PTO Mechanical C.40.B

AXLES, BRAKES AND STEERING ..... D

FRONT AXLE D.10.A

REAR AXLE D.12.A

2WD-4WD SYSTEM Mechanical D.14.B

Final drive D.15.A

STEERING Hydraulic D.20.C

SERVICE BRAKE Mechanical D.30.B

PARKING BRAKE Mechanical D.32.B

FRAME AND CAB ..... E

USER CONTROLS AND SEAT E.32.A

USER PLATFORM E.34.A

PREVIEW - YOUFIXTHIS.COM

Download full manual at youfixthis.com

INTRODUCTION

PREVIEW - YOUFIXTHIS.COM

Download full manual at youfixthis.com

Relief valve - Inspect

Prior operation:
Relief valve - Test (A.10.A)
Prior operation:
Relief valve - Service instruction (A.10.A)

1. Inspect for worn components. Relief Valve is not serviced separately.
   - Screw with o ring, **(1)**.
   - Pressure relief valve - 12 sets of belleville spring washers (NSS), **(2)**.
   - Housing, **(3)**.

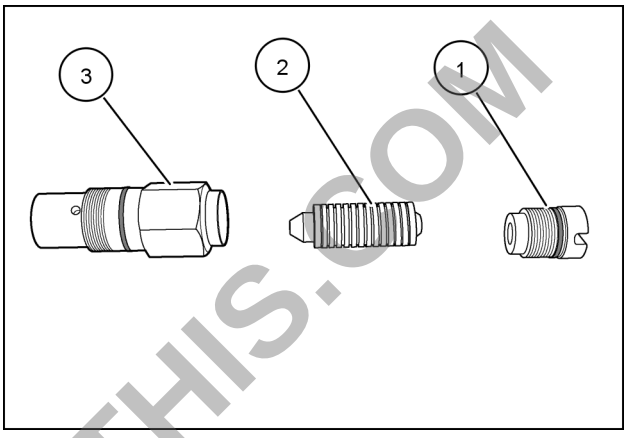

20098430 1

Next operation:
Relief valve - Install (A.10.A)

PREVIEW - YOUFIXTHIS.COM

Download full manual at youfixthis.com

the relay energizes closing contacts #4 and #5. Terminal #5 completes the ground path to terminal #4 of the safety start relay.

3. When the ground source is provide to terminal #4 of the safety start relay and current provide to terminal #6 from terminal #3 of the ignition switch, the relay latches terminals #2 and #7. Terminal #7 provides current to the starter allowing the engine starter to rotate the engine.
4. Current is supplied to the fuel shutoff relay by the #5, **15 A** fuse and when the ground path is completed by the #2 terminal of the operator safety module, the fuel shutoff relay energizes, latch terminals #10 and #9 allowing current to flow to the fuel shutoff solenoid. When the solenoid is energized the solenoid plunger retracts and allows fuel to flow to the fuel injection pump.
5. With the injection pump supplied with fuel and the engine rotating, the engine will start.

PREVIEW - YOUFIXTHIS.COM

Download full manual at youfixthis.com

LIGHTING SYSTEM - Troubleshooting Lighting circuit

Problem	Possible Cause	Correction
Front road lamps will not illuminate or are dim	Insufficient battery charge.	Test battery. Charge, add water, or replace as necessary.
	Road lamp bulb faulty.	Check and replace bulb as necessary.
	Blown fusible link.	Inspect fusible link and replace as necessary.
	Blown fuse head/park, **20 A** fuse.	Replace fuse as necessary.
	Defective light switch.	Test light switch and replace as necessary.
	Improper connection at work lamp terminals or headlight socket.	Check connections and lamp socket. Repair or replace as necessary.
	Improper ground connection.	Check ground connections and repair as necessary.
Rear taillights will not illuminate or are dim	Insufficient battery charge.	Test battery. Charge, add water, or replace as necessary.
	Taillight bulb fault.	Check and replace bulb as necessary.
	Blown fusible link.	Inspect fusible link and replace as necessary.
	Blown fuse head/park, **20 A** fuse.	Replace fuse as necessary.
	Defective light switch.	Test light switch and replace as necessary.
	Improper connection at taillight lamp terminals or lamp socket.	Check connections and lamp socket. Repair or replace as necessary.
	Improper ground connection.	Check ground connections and repair as necessary.
Instrument panel illumination light not illuminated or is dim	Insufficient battery charge.	Test battery. Charge, add water, or replace as necessary.
	Instrument panel illumination bulb burnt out.	Check and replace bulb as necessary.
	Blown fuse head/park, **20 A** fuse.	Replace fuse as necessary.
	Defective light switch.	Test light switch and replace as necessary.
	Improper connection at instrument panel terminals or light socket	Check connections and socket. Repair or replace as necessary.
	Improper ground connection	Check ground connections and repair as necessary.

PREVIEW - YOUFIXTHIS.COM

Download full manual at youfixthis.com

4. Extract the spring retaining pins, **(1)**, from the seats.

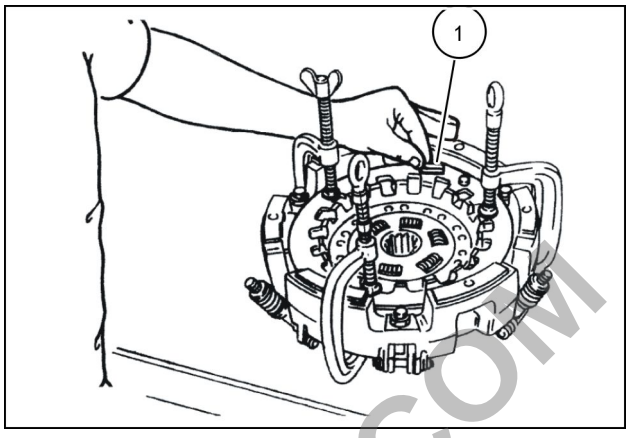

20097539 4

5. Remove disk ring, **(1)**, and lock ring, **(2)**.

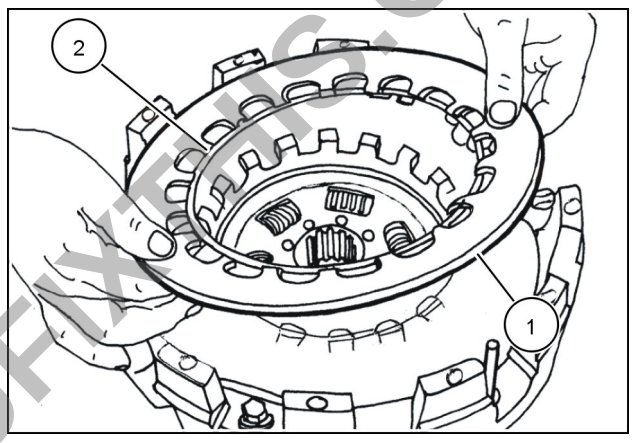

20097540 5

6. Loosen lock nut, **(1)**.

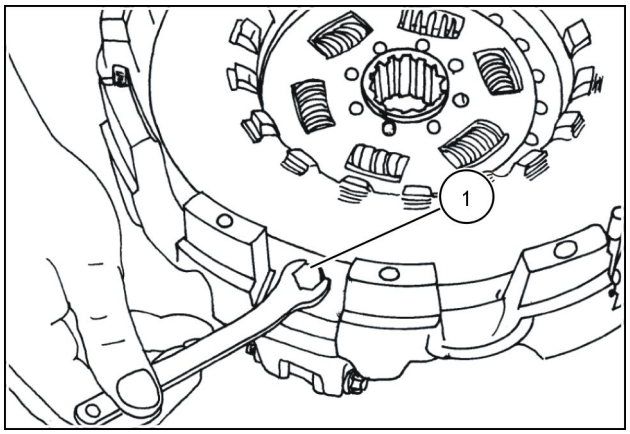

20097553 6

7. Remove transmission clutch pressure plate, **(1)**,

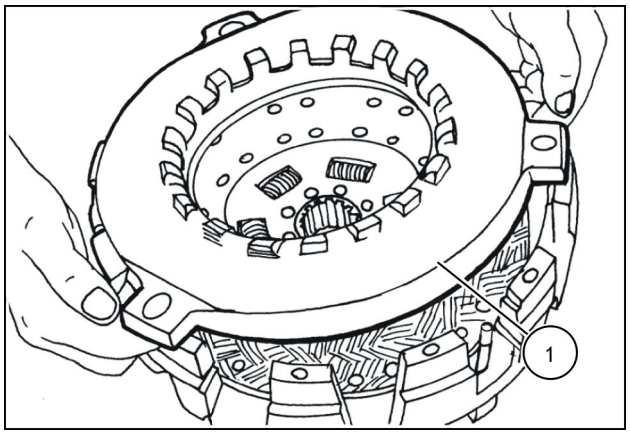

20097541 7

PREVIEW - YOUFIXTHIS.COM

Download full manual at youfixthis.com

Sensing system - Install Transmission range safety switch

Prior operation:
Sensing system - Test Transmission range safety switch (C.20.B)

1. Thread the transmission range safety switch, **(1)**, with sealing washer into the left side of the transmission.
2. Connect the safety switch leads to the tractor wire harness.
3. Connect the negative (-) battery cable to the negative (-) battery terminal.

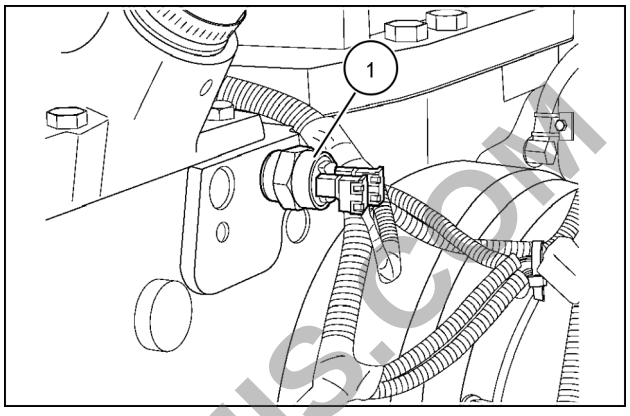

20098826 1

PREVIEW - YOUFIXTHIS.COM

Download full manual at youfixthis.com

11. Gasket eliminator **LOCTITE® 518** application diagram for assembly of bevel drive unit and epicyclic final drive unit.

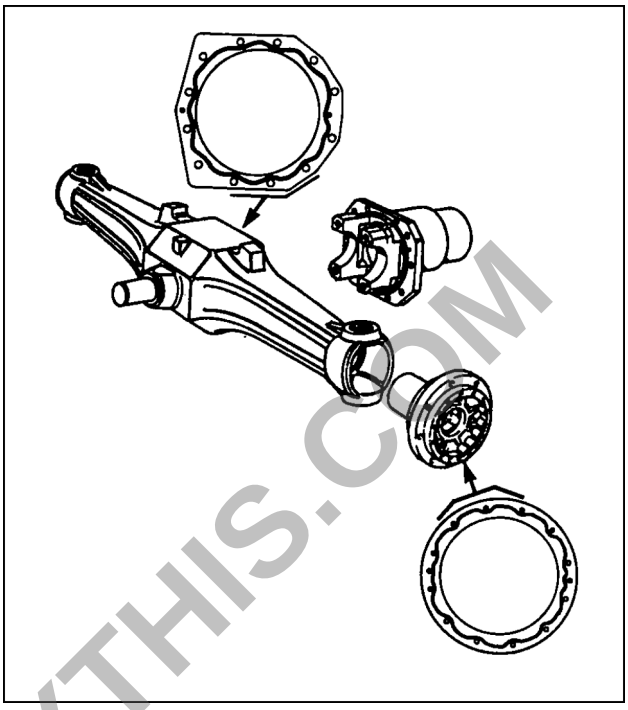

20097711 7

PREVIEW - YOUFIXTHIS.COM

Download full manual at youfixthis.com

AXLES, BRAKES AND STEERING - D

Final drive - 15.A

Farmall 75A

PREVIEW - YOUFIXTHIS.COM

Download full manual at youfixthis.com

Steering cylinder - Disassemble - Four wheel drive steering cylinder

Prior operation:
Steering cylinder - Remove - Four wheel drive steering cylinder (D.20.C)

1. Using a snap ring pliers, remove ring gland nut, **(1)**.

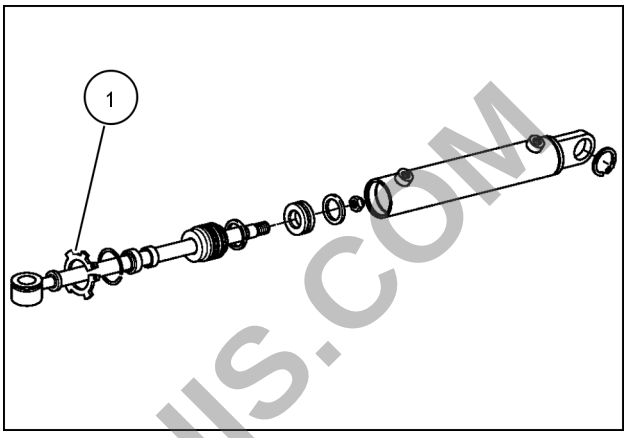

20097912 1

2. Push the steering cylinder gland into the cylinder and remove the wire locking ring, **(1)**.
3. Pull the rod and gland assembly from the cylinder.

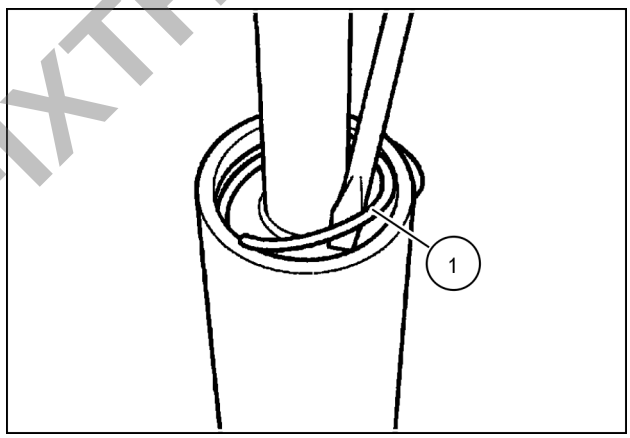

20097913 2

4. Remove the piston rod nut, **(1)**, from the cylinder rod and disassemble to replace the seals.

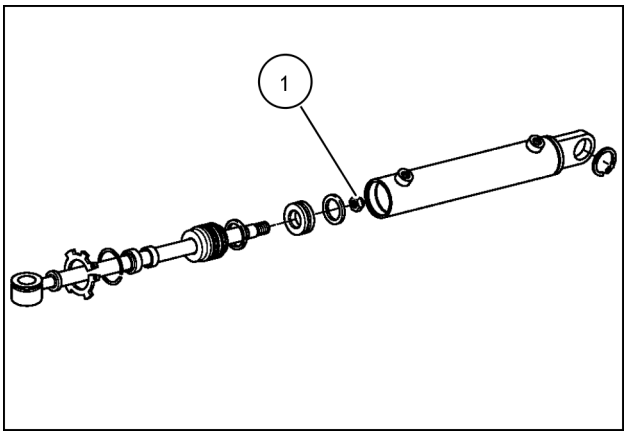

20097912 3

Next operation:
Steering cylinder - Inspect - Four wheel drive steering cylinder (D.20.C)

PREVIEW - YOUFIXTHIS.COM

Download full manual at youfixthis.com

PREVIEW ONLY

You're viewing 25 of 666 pages

The full manual includes:

- All 666 pages, complete
- Searchable PDF (find any keyword)
- No watermarks
- Instant download
- Print-ready quality

GET FULL MANUAL NOW

Case IH Farmall 75A Service Manual

Scan or click anywhere
youfixthis.com

Click anywhere on this page to get the full manual