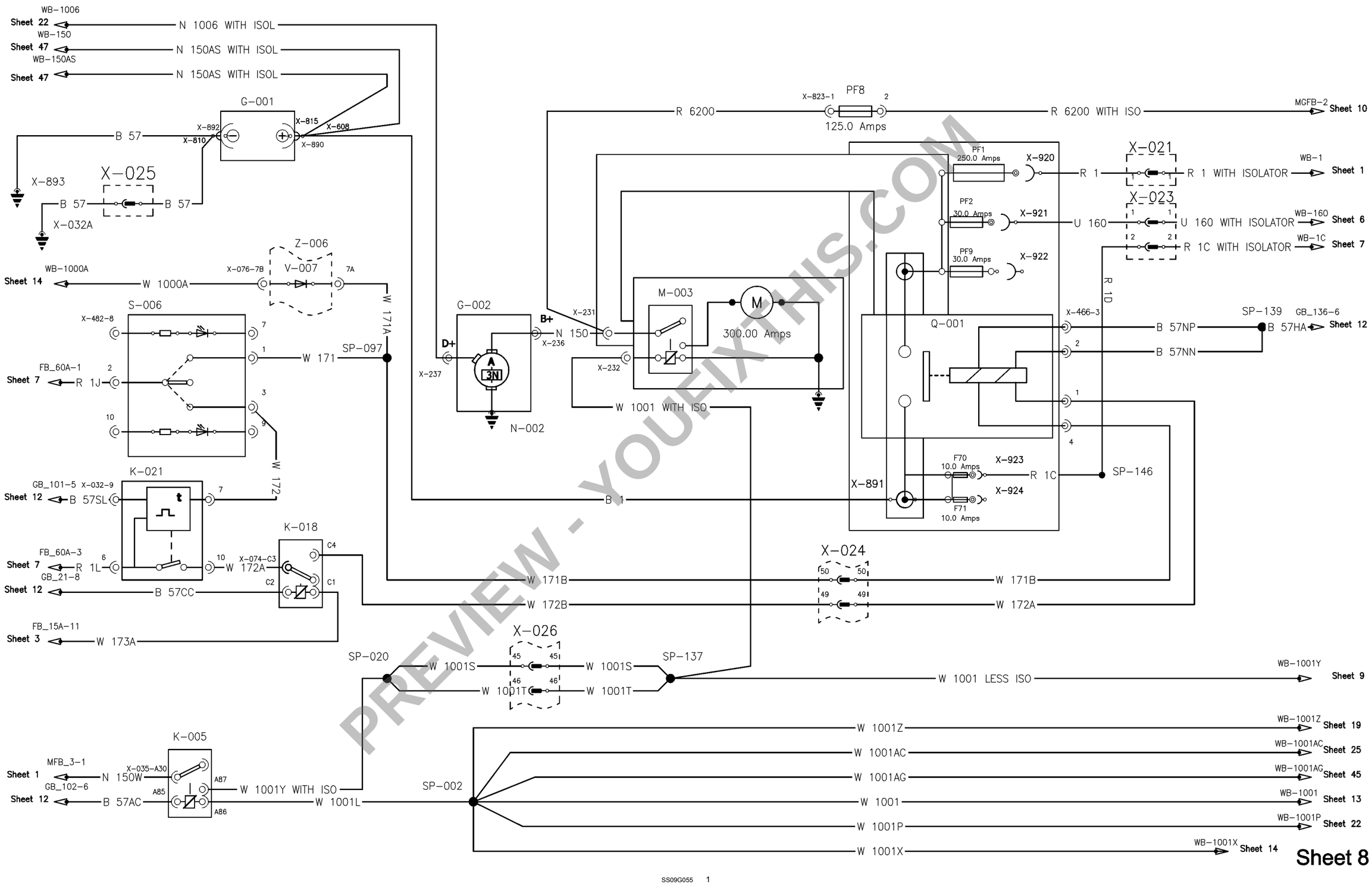

PREVIEW - YOUFIXTHIS.COM

Download full manual at youfixthis.com

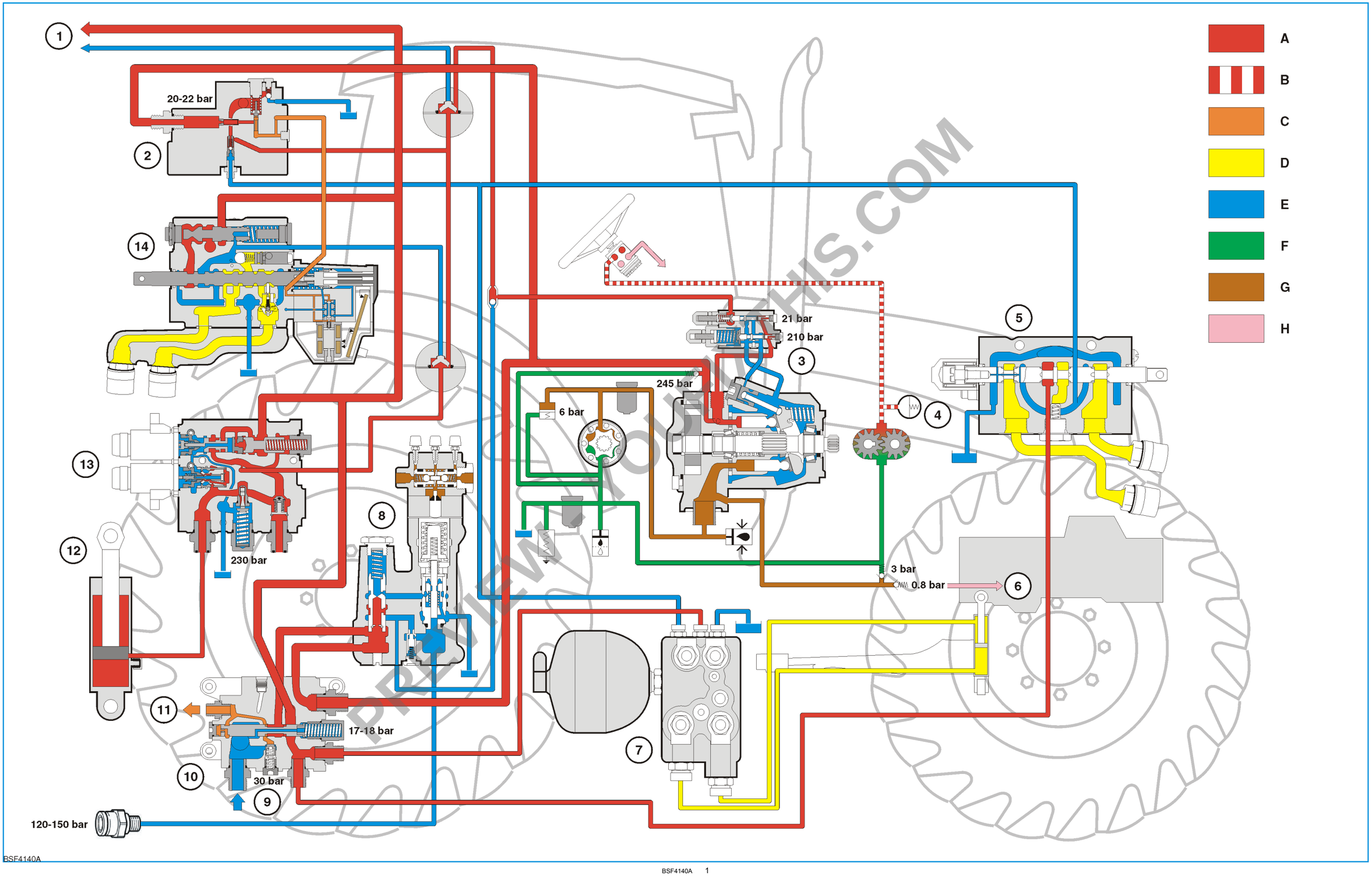

BSF4140A

BSF4140A 1

Download full manual at youfixthis.com

Bevel gear - Preload (Class 3+ Axle)

Multi Wet-Plate Differential Lock

1. The differential bearing preload is checked by measuring the combined rolling torque of the crown wheel and pinion assembly and comparing it to the pinion and seals rolling torque value A1 (**Bevel gear - Install (D.10.A)**).
   Attach a torque meter to the pinion shaft and measure the rolling torque to rotate the pinion and crown wheel A2.

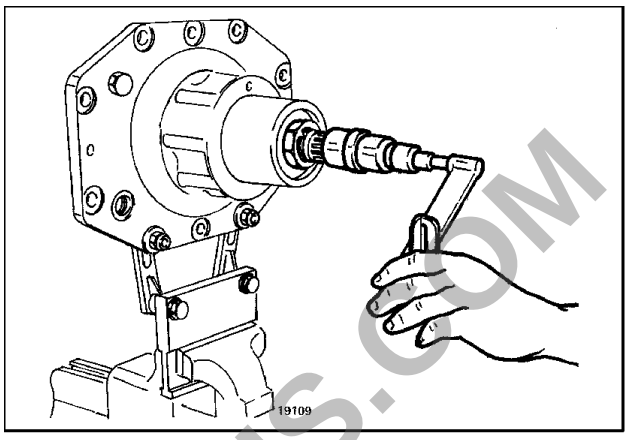

19109 1

2. Subtract from the rolling torque reading A2, the pinion and seals rolling torque A1. The difference between the two values should be **1 - 1.5 Nm** (**9 - 13 lbf in**).
3. Adjust the right-hand locking ring until the rolling torque is within the specification quoted in the previous step.
4. Rotate the crown wheel and pinion through **360 °**.
5. Recheck the backlash, adjust as necessary.
6. Rotate the crown wheel and pinion through **360 °**.
7. Recheck the differential bearing preload, adjust as necessary.
8. Tighten the differential assembly side cap retaining bolts to the specified torque value.

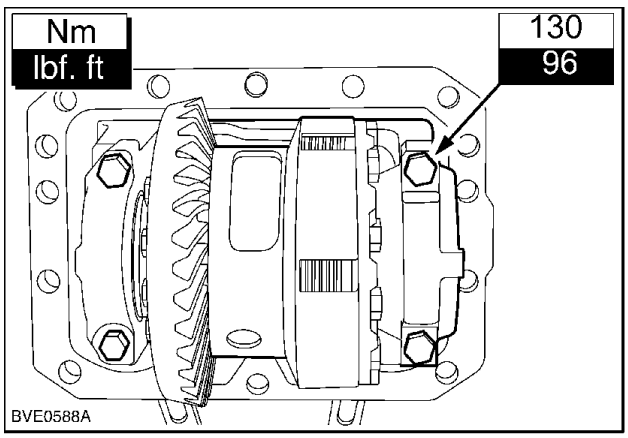

BVE0588A 2

PREVIEW - YOUFIXTHIS.COM

Download full manual at youfixthis.com

Tighten torques engine/ transmission, cab front mounting bolt

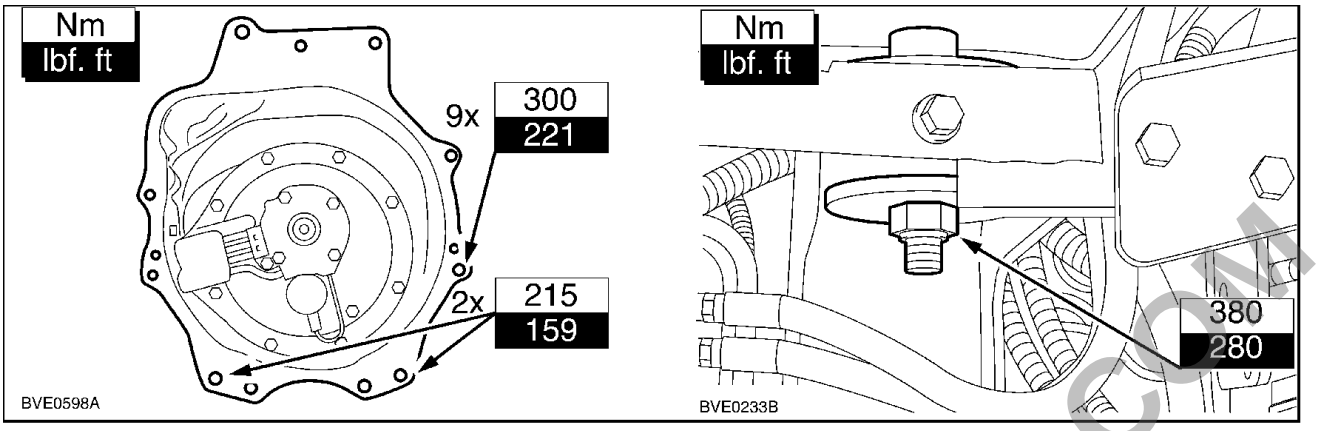

BVE0598A_32 12

ENGINE - General specification 4 Cylinder 2 Valve Mechanical - F4CE0484B*D

Engine Type: 4 cylinder 2 Valve Mechanical-	F4CE0484B*D - Tier2
Compression ratio	17.5:1
Maximum power	**74 kW**
	101 Hp
Rated Engine Speed	**2200 RPM**
Maximum torque @ **1400 RPM**	**400 Nm**
Slow idling speed of engine without load	**850 RPM**
Fast idling speed of engine without load	**2400 RPM**
Turbocharger type	HOLSET
Lubrication	Forced via lobe pump, pressure relief valve, oil filter
Oil pressure with engine hot	
– at slow idling	**1.2 bar** (**17.40 psi**)
– at fast idling	**3.8 bar** (**55.10 psi**)
Cooling system	Fluid–based
Coolant pump drive:	Via belt
Thermostat:	
– starts to open - fully open	**81 - 96 °C** (**177.80 - 204.80 °F**)
Filling	**CASE AKCELA NO. 1 ENGINE OIL SAE 15W-40**
– engine sump	min **7 l** (**1.85 US gal**) max **10 l** (**2.64 US gal**)
– engine sump + filter	**11 l** (**2.91 US gal**)
Type	4-cylinders
Cycle	Diesel, 4–stroke
Fuel system	Turbocharged
Fuel injection	Direct
Number of cylinders	4
Bore	**104 mm** (**4.09 in**)
Stroke	**132 mm** (**5.20 in**)
Total displacement	**4485 cm³ 273.6 in³**
Valve Clearance (engine cold) Inlet	**0.25 mm** (**0.01 in**)± **0.5 mm** (**0.02 in**)
Exhaust	**0.50 mm** (**0.02 in**)± **0.5 mm** (**0.02 in**)
Fuel system	

PREVIEW - YOUFIXTHIS.COM

Download full manual at youfixthis.com

Final drive - Troubleshooting

Problem	Possible Cause	Correction
Noisy final drives when the tractor is moving and also with transmission in neutral	Wheel axle shaft bearing incorrectly adjusted	Remove final drive case and adjust bearings
	Faulty or defective internal component.	Remove final drive case and replace damaged parts.
	Excess wheel axle shaft to final drive spline backlash	Remove final drive case and replace damaged parts.

PREVIEW - YOUFIXTHIS.COM

Download full manual at youfixthis.com

Testing - Tractor does not drive in any gear 181
Testing - Tractor drives in ranges but has following fault: 181
Testing - The powershifts are not smooth or the tractor loses drive between powershifts: 182
Testing - The tractor drives in all gears and ranges but has the following fault: 183
Testing The tractor drives in all gears and ranges but has the following fault: 184
Testing The tractor drives in all gears and in all ranges but has the following fault: 184
Testing - Tractor drives in all gears and ranges but has the following fault: 185

PREVIEW - YOUFIXTHIS.COM

Download full manual at youfixthis.com

FRONT AXLE D.10.A
REAR AXLE D.12.A
2WD-4WD SYSTEM Hydraulic D.14.C
STEERING Hydraulic D.20.C
SERVICE BRAKE Hydraulic D.30.C
PARKING BRAKE Mechanical D.32.B
BRAKE CONNECTION Hydraulic D.34.C
SUSPENSION Hydraulic D.40.C
WHEELS AND TRACKS Wheels D.50.C
FRAME AND CAB ..... E
FRAME Primary frame E.10.B
SHIELD E.20.A
USER CONTROLS AND SEAT E.32.A
USER PLATFORM E.34.A
ENVIRONMENT CONTROL Heating, ventilation and air-conditioning E.40.D
HITCH AND WORKING TOOL ..... H
HITCH Front hitch H.10.B
HITCH Rear hitch H.10.C
HITCH Electronic draft control H.10.D

PREVIEW - YOUFIXTHIS.COM

Download full manual at youfixthis.com

4. Undo the solenoid nut.

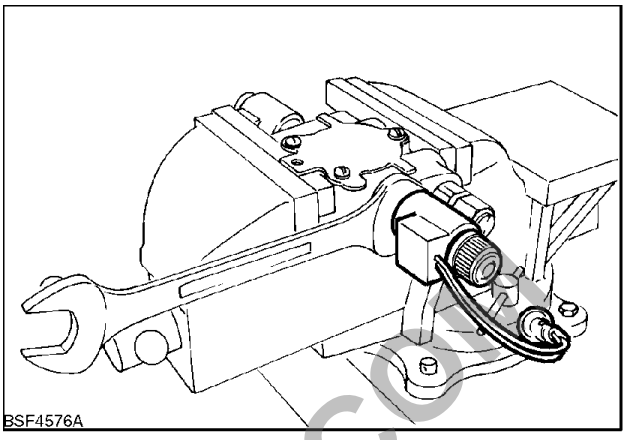

BSF4576A 4

5. Withdraw the solenoid assembly. Repeat for the opposite solenoid.

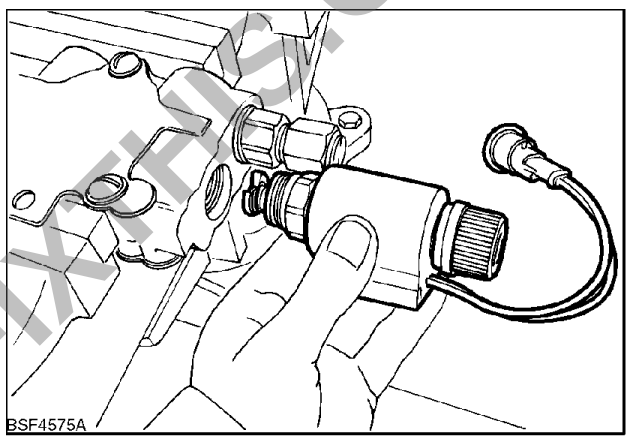

BSF4575A 5

6. Carefully remove spool from the valve slice. Inspect the spool and bore for scoring and damage. If the spool is badly scored or worn the valve assembly must be replaced.

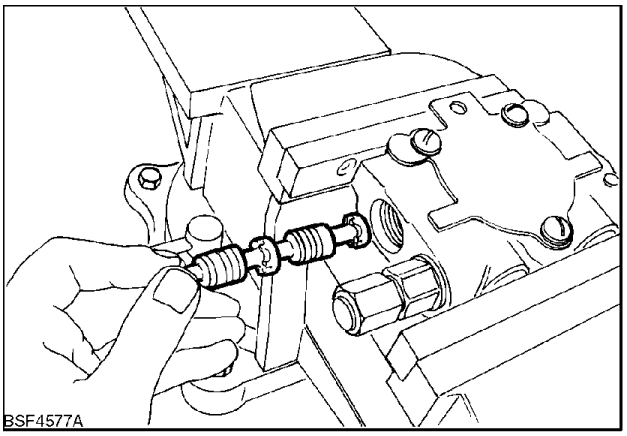

BSF4577A 6

PREVIEW - YOUFIXTHIS.COM

Download full manual at youfixthis.com

C068 RADAR GUN

POS.	WIRE NUMBER	CIRCUIT REFERENCE
1	2028B (G)	RADAR ASSEMBLY (GUN) SIGNAL
2	57JD (B)	EARTH (ALL)
3	2027 (R)	RADAR ASSEMBLY (GUN) POWER
4	2031 (Y)	RADAR PRESENT

NOTE: *For the wiring color code refer to,* ***Wiring harness - Overview (A.30.A)****.*

MAXXUM

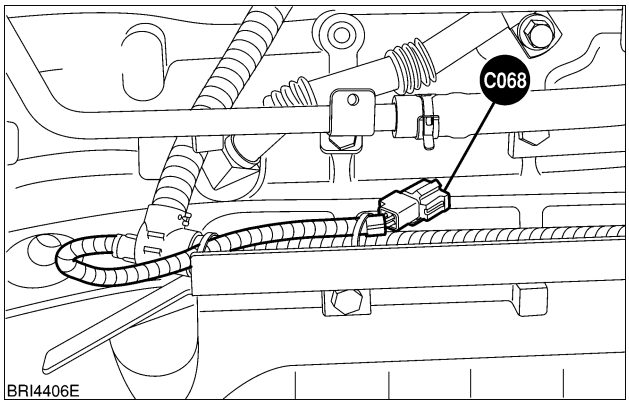

C068V-BRI4406E 19

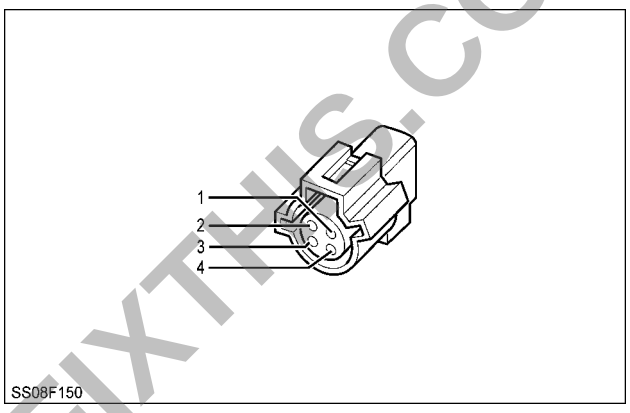

SS08F150 20

REAR RIGHT HAND SIDE ENGINE

MAXXUM - Multicontroller

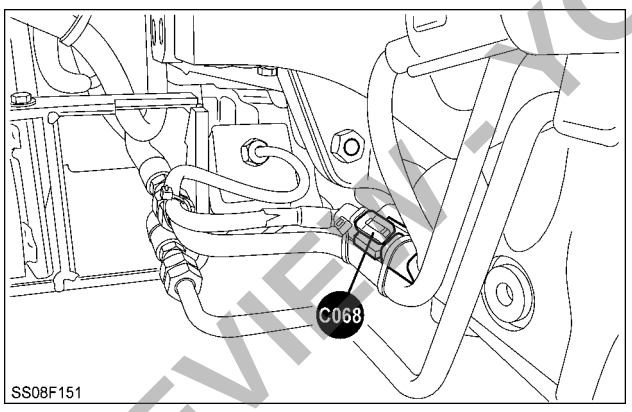

SS08F151 21

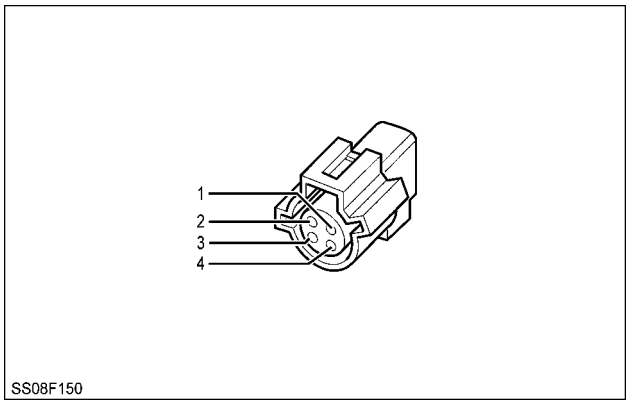

SS08F150 22

REAR RIGHT HAND SIDE ENGINE

PREVIEW - YOUFIXTHIS.COM

Download full manual at youfixthis.com

Connector - Component diagram 54 Connectors 540-549

MAXXUM 110 Multicontroller [Z7BE50001 - Z9BE60000], MAXXUM 115 Multicontroller [Z7BE50001 - Z9BE60000], MAXXUM 120 Multicontroller [Z7BE50001 - Z9BE60000], MAXXUM 125 Multicontroller [Z7BE50001 - Z9BE60000], MAXXUM 130 Multicontroller [Z7BE50001 - Z9BE60000], MAXXUM 140 Multicontroller [Z7BE50001 - Z9BE60000], MAXXUM 100, MAXXUM 110, MAXXUM 115, MAXXUM 120, MAXXUM 125, MAXXUM 130, MAXXUM 140

C542 AIR CONDITIONING THERMOSTAT

POS.	WIRE NUMBER	CIRCUIT REFERENCE
1	9215 (U/K) / (U)	AC-SWITCH ON
2	2006A (L) / (U/R)	DE-ICING SWITCH - AIR CONDITIONER

NOTE: *For the wiring color code refer to,* ***Wiring harness - Overview (A.30.A)****.*

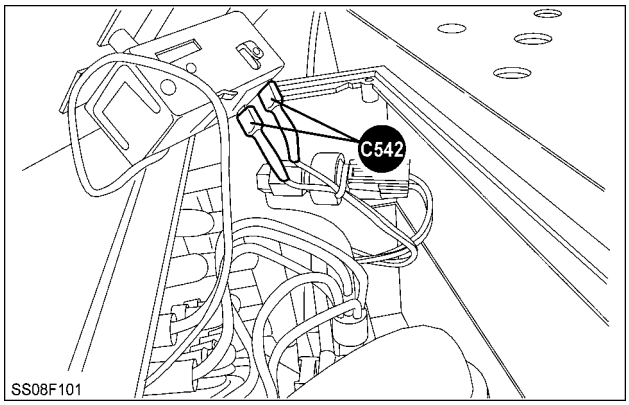

SS08F101 1

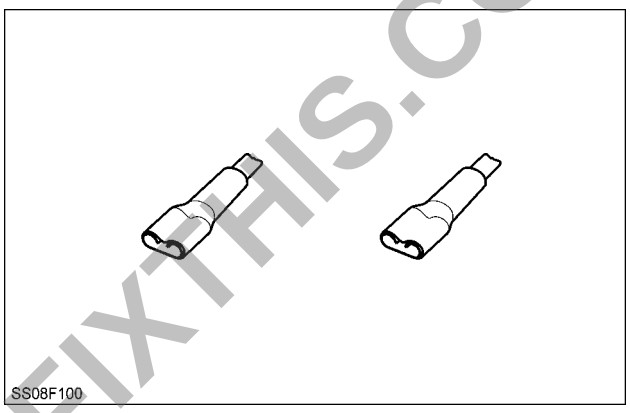

SS08F100 2

UNDER THE SEAT

C543 AIR CONDITIONING LOW PRESSURE SWITCH

POS.	WIRE NUMBER	CIRCUIT REFERENCE
A	2006 (U/K)	DE-ICING SWITCH - AIR CONDITIONER
B	9215 (U/K)	AC-SWITCH ON

NOTE: *For the wiring color code refer to,* ***Wiring harness - Overview (A.30.A)****.*

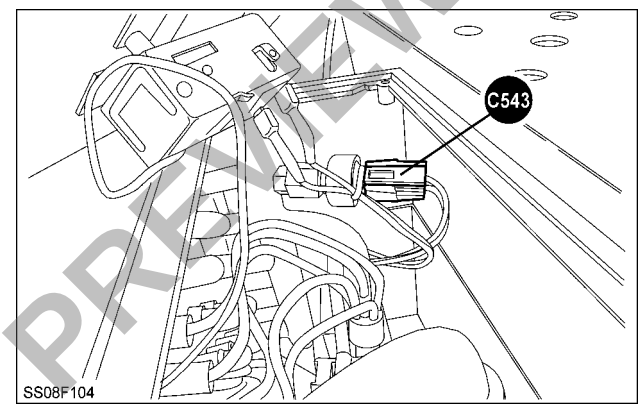

SS08F104 3

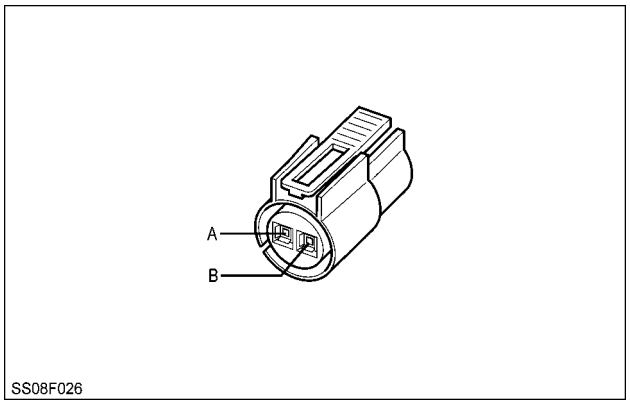

SS08F026 4

UNDER THE SEAT

PREVIEW - YOUFIXTHIS.COM

Download full manual at youfixthis.com

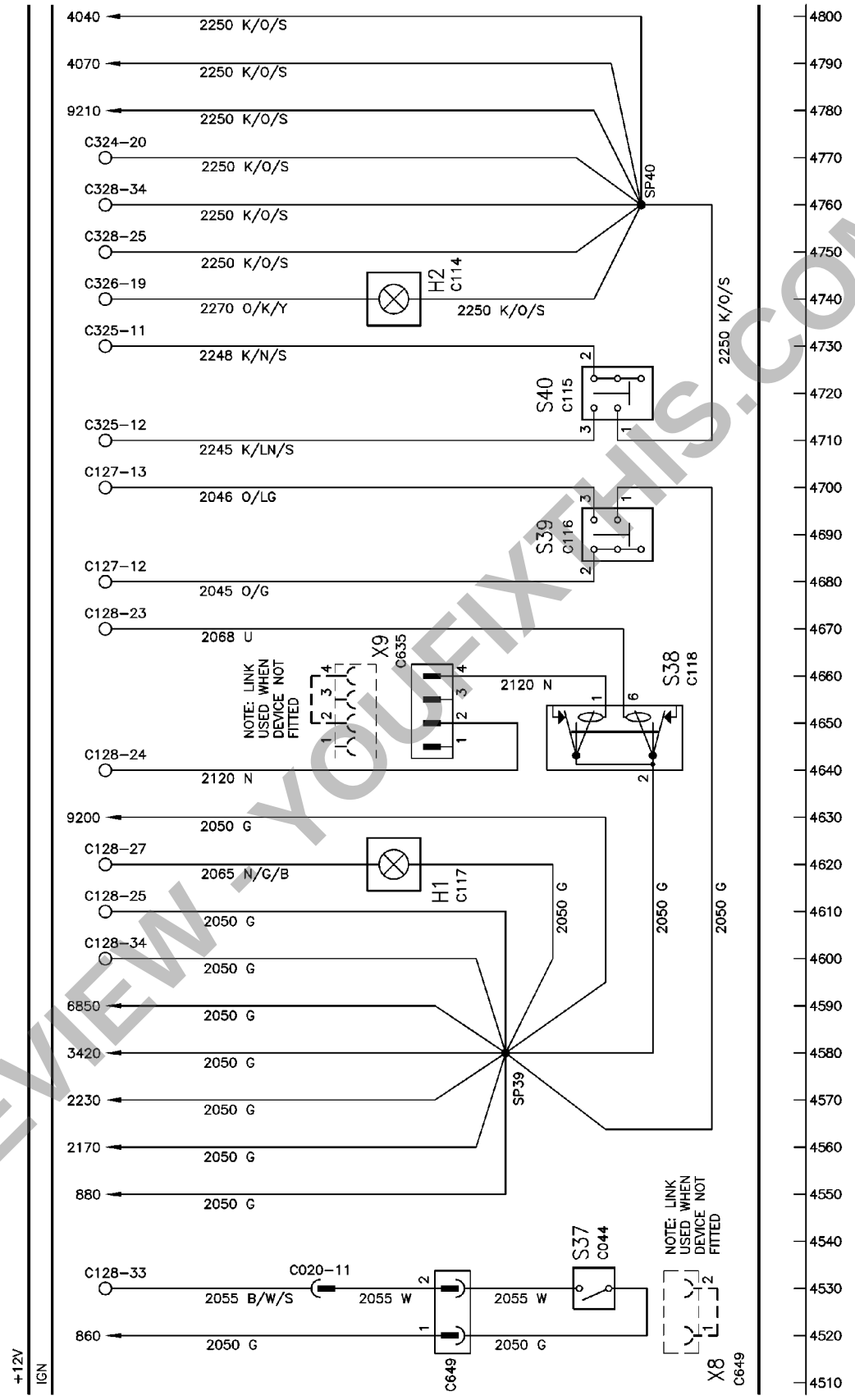

SS09D196 1

PREVIEW - YOUFIXTHIS.COM

Download full manual at youfixthis.com

Wiring harness - Electrical schematic frame 38 Processors 2

MAXXUM 100 2v L/Cab 16x16, MAXXUM 110 2v L/Cab 16x16, MAXXUM 115 2v L/Cab 16x16, MAXXUM 125 2v L/Cab 16x16, MAXXUM 140 2v L/Cab 16x16

Compo-nent	Connector	Description
A012	**C081**	Instrument Panel C
A017	**C326**	XCM Auxiliary Controller (CN2)
A019	**C239**	XCM Central Control Unit (CN2)
Additional Connectors: **C001**		

Wire Colour Codes							
B	Black	R	Red	LG	Light Green	K	Pink
N	Brown	O	Orange	U	Blue	W	White
LN	Light Brown	Y	Yellow	TQ	Turquoise		
S	Slate	G	Green	L	Lilac		

PREVIEW - YOUFIXTHIS.COM

Download full manual at youfixthis.com

Wiring harness - Electrical schematic frame 19 Front Suspension

MAXXUM 100 2v L/Cab 12x12, MAXXUM 110 2v L/Cab 12x12, MAXXUM 115 2v L/Cab 12x12, MAXXUM 125 2v L/Cab 12x12

Compo-nent	Connector	Description
B23	**C411**	Front Suspension Potentiometer
Additional Connectors: **C253 C269**		

Wire Colour Codes

B	Black	R	Red	LG	Light Green	K	Pink
N	Brown	O	Orange	U	Blue	W	White
LN	Light Brown	Y	Yellow	TQ	Turquoise		
S	Slate	G	Green	L	Lilac		

PREVIEW - YOUFIXTHIS.COM

Download full manual at youfixthis.com

Wiring harness - Electrical schematic frame 37 Processors 1 550
MAXXUM 100 2v W/Cab 16x16, MAXXUM 110 2v W/Cab 16x16, MAXXUM 115 2v W/Cab 16x16, MAXXUM 125 2v W/Cab 16x16, MAXXUM 140 2v W/Cab 16x16
Wiring harness - Electrical schematic frame 37 Processors 1 634
MAXXUM 100 2v W/Cab 24x24, MAXXUM 110 2v W/Cab 24x24, MAXXUM 115 2v W/Cab 24x24, MAXXUM 125 2v W/Cab 24x24, MAXXUM 140 2v W/Cab 24x24
Wiring harness - Electrical schematic frame 37 Processors 1 716
MAXXUM 100 2v L/Cab 16x16, MAXXUM 110 2v L/Cab 16x16, MAXXUM 115 2v L/Cab 16x16, MAXXUM 125 2v L/Cab 16x16, MAXXUM 140 2v L/Cab 16x16
Wiring harness - Electrical schematic frame 37 Processors 1 798
MAXXUM 100 2v L/ Cab 24x24, MAXXUM 110 2v L/ Cab 24x24, MAXXUM 115 2v L/ Cab 24x24, MAXXUM 125 2v L/ Cab 24x24, MAXXUM 140 2v L/ Cab 24x24
Wiring harness - Electrical schematic frame 37 Processors 1 880
MAXXUM 100 2v W/Cab 12x12, MAXXUM 110 2v W/Cab 12x12, MAXXUM 115 2v W/Cab 12x12, MAXXUM 125 2v W/Cab 12x12
Wiring harness - Electrical schematic frame 37 Processors 1 962
MAXXUM 100 2v L/Cab 12x12, MAXXUM 110 2v L/Cab 12x12, MAXXUM 115 2v L/Cab 12x12, MAXXUM 125 2v L/Cab 12x12
Wiring harness - Electrical schematic frame 38 Diagnostics 1064
MAXXUM 110 Multicontroller [Z7BE50001 - Z9BE60000] 4v W/Cab 16x16, MAXXUM 115 Multicontroller [Z7BE50001 - Z9BE60000] 4v W/Cab 16x16, MAXXUM 120 Multicontroller [Z7BE50001 - Z9BE60000] 4v W/Cab 16x16, MAXXUM 125 Multicontroller [Z7BE50001 - Z9BE60000] 4v W/Cab 16x16, MAXXUM 130 Multicontroller [Z7BE50001 - Z9BE60000] 4v W/Cab 16x16, MAXXUM 140 Multicontroller [Z7BE50001 - Z9BE60000] 4v W/Cab 16x16
Wiring harness - Electrical schematic frame 38 Processors 2 468
MAXXUM 110 4v W/Cab 16x16, MAXXUM 115 4v W/Cab 16x16, MAXXUM 120 4v W/Cab 16x16, MAXXUM 125 4v W/Cab 16x16, MAXXUM 130 4v W/Cab 16x16, MAXXUM 140 4v W/Cab 16x16
Wiring harness - Electrical schematic frame 38 Processors 2 552
MAXXUM 100 2v W/Cab 16x16, MAXXUM 110 2v W/Cab 16x16, MAXXUM 115 2v W/Cab 16x16, MAXXUM 125 2v W/Cab 16x16, MAXXUM 140 2v W/Cab 16x16
Wiring harness - Electrical schematic frame 38 Processors 2 636
MAXXUM 100 2v W/Cab 24x24, MAXXUM 110 2v W/Cab 24x24, MAXXUM 115 2v W/Cab 24x24, MAXXUM 125 2v W/Cab 24x24, MAXXUM 140 2v W/Cab 24x24
Wiring harness - Electrical schematic frame 38 Processors 2 718
MAXXUM 100 2v L/Cab 16x16, MAXXUM 110 2v L/Cab 16x16, MAXXUM 115 2v L/Cab 16x16, MAXXUM 125 2v L/Cab 16x16, MAXXUM 140 2v L/Cab 16x16
Wiring harness - Electrical schematic frame 38 Processors 2 800
MAXXUM 100 2v L/ Cab 24x24, MAXXUM 110 2v L/ Cab 24x24, MAXXUM 115 2v L/ Cab 24x24, MAXXUM 125 2v L/ Cab 24x24, MAXXUM 140 2v L/ Cab 24x24
Wiring harness - Electrical schematic frame 38 Processors 2 882
MAXXUM 100 2v W/Cab 12x12, MAXXUM 110 2v W/Cab 12x12, MAXXUM 115 2v W/Cab 12x12, MAXXUM 125 2v W/Cab 12x12
Wiring harness - Electrical schematic frame 38 Processors 2 964
MAXXUM 100 2v L/Cab 12x12, MAXXUM 110 2v L/Cab 12x12, MAXXUM 115 2v L/Cab 12x12, MAXXUM 125 2v L/Cab 12x12
Wiring harness - Electrical schematic frame 39 Air Con - Common 470
MAXXUM 110 4v W/Cab 16x16, MAXXUM 115 4v W/Cab 16x16, MAXXUM 120 4v W/Cab 16x16, MAXXUM 125 4v W/Cab 16x16, MAXXUM 130 4v W/Cab 16x16, MAXXUM 140 4v W/Cab 16x16
Wiring harness - Electrical schematic frame 39 Air Con - Common 554
MAXXUM 100 2v W/Cab 16x16, MAXXUM 110 2v W/Cab 16x16, MAXXUM 115 2v W/Cab 16x16, MAXXUM 125 2v W/Cab 16x16, MAXXUM 140 2v W/Cab 16x16
Wiring harness - Electrical schematic frame 39 Air Con - Common 638
MAXXUM 100 2v W/Cab 24x24, MAXXUM 110 2v W/Cab 24x24, MAXXUM 115 2v W/Cab 24x24, MAXXUM 125 2v W/Cab 24x24, MAXXUM 140 2v W/Cab 24x24
Wiring harness - Electrical schematic frame 39 Air Con - Common 720
MAXXUM 100 2v L/Cab 16x16, MAXXUM 110 2v L/Cab 16x16, MAXXUM 115 2v L/Cab 16x16, MAXXUM 125 2v L/Cab 16x16, MAXXUM 140 2v L/Cab 16x16
Wiring harness - Electrical schematic frame 39 Air Con - Common 802
MAXXUM 100 2v L/ Cab 24x24, MAXXUM 110 2v L/ Cab 24x24, MAXXUM 115 2v L/ Cab 24x24, MAXXUM 125 2v L/ Cab 24x24, MAXXUM 140 2v L/ Cab 24x24
Wiring harness - Electrical schematic frame 39 Air Con - Common 884
MAXXUM 100 2v W/Cab 12x12, MAXXUM 110 2v W/Cab 12x12, MAXXUM 115 2v W/Cab 12x12, MAXXUM 125 2v W/Cab 12x12
Wiring harness - Electrical schematic frame 39 Air Con - Common 966
MAXXUM 100 2v L/Cab 12x12, MAXXUM 110 2v L/Cab 12x12, MAXXUM 115 2v L/Cab 12x12, MAXXUM 125 2v L/Cab 12x12
Wiring harness - Electrical schematic frame 39 Processors 1 1066
MAXXUM 110 Multicontroller [Z7BE50001 - Z9BE60000] 4v W/Cab 16x16, MAXXUM 115 Multicontroller [Z7BE50001 - Z9BE60000] 4v W/Cab 16x16, MAXXUM 120 Multicontroller [Z7BE50001 - Z9BE60000] 4v W/Cab 16x16, MAXXUM 125 Multicontroller [Z7BE50001 - Z9BE60000] 4v W/Cab 16x16, MAXXUM 130 Multicontroller [Z7BE50001 - Z9BE60000] 4v W/Cab 16x16, MAXXUM 140 Multicontroller [Z7BE50001 - Z9BE60000] 4v W/Cab 16x16
Wiring harness - Electrical schematic frame 40 Air Con Auto 472
MAXXUM 110 4v W/Cab 16x16, MAXXUM 115 4v W/Cab 16x16, MAXXUM 120 4v W/Cab 16x16, MAXXUM 125 4v W/Cab 16x16, MAXXUM 130 4v W/Cab 16x16, MAXXUM 140 4v W/Cab 16x16
Wiring harness - Electrical schematic frame 40 Air Con Auto 556
MAXXUM 100 2v W/Cab 16x16, MAXXUM 110 2v W/Cab 16x16, MAXXUM 115 2v W/Cab 16x16, MAXXUM 125 2v W/Cab 16x16, MAXXUM 140 2v W/Cab 16x16
Wiring harness - Electrical schematic frame 40 Air Con Auto 640
MAXXUM 100 2v W/Cab 24x24, MAXXUM 110 2v W/Cab 24x24, MAXXUM 115 2v W/Cab 24x24, MAXXUM 125 2v W/Cab 24x24, MAXXUM 140 2v W/Cab 24x24
Wiring harness - Electrical schematic frame 40 Air Con Auto 722
MAXXUM 100 2v L/Cab 16x16, MAXXUM 110 2v L/Cab 16x16, MAXXUM 115 2v L/Cab 16x16, MAXXUM 125 2v L/Cab 16x16, MAXXUM 140 2v L/Cab 16x16
Wiring harness - Electrical schematic frame 40 Air Con Auto 804
MAXXUM 100 2v L/ Cab 24x24, MAXXUM 110 2v L/ Cab 24x24, MAXXUM 115 2v L/ Cab 24x24, MAXXUM 125 2v L/ Cab 24x24, MAXXUM 140 2v L/ Cab 24x24

Download full manual at youfixthis.com

X607 FUSE PF5

POS.	WIRE NUMBER	CIRCUIT REFERENCE
1	150AX (N)	BATTERY FEED (UNFUSED)(ALL)
1	150AV (N)	BATTERY FEED (UNFUSED)(ALL)

NOTE: *For the wiring color code refer to,* ***Wiring harness - Overview (A.30.A)****.*

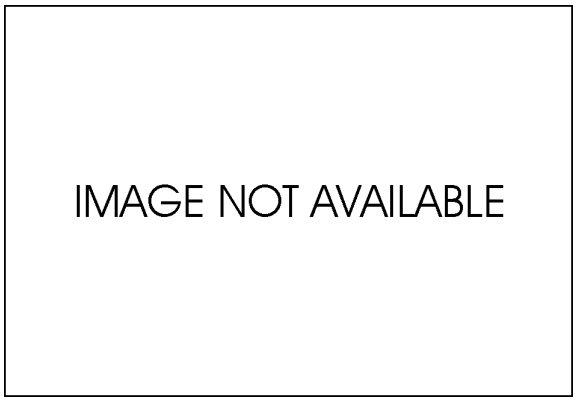

INA 13

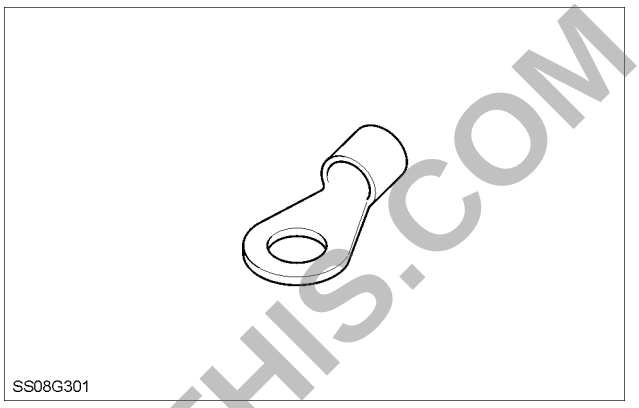

SS08G301 14

RIGHT HAND BEHIND STEPS

X608 ISO BUS POWER SUPPLY

POS.	WIRE NUMBER	CIRCUIT REFERENCE
1	150AS (N)	BATTERY FEED (UNFUSED)(ALL)

NOTE: *For the wiring color code refer to,* ***Wiring harness - Overview (A.30.A)****.*



INA 15

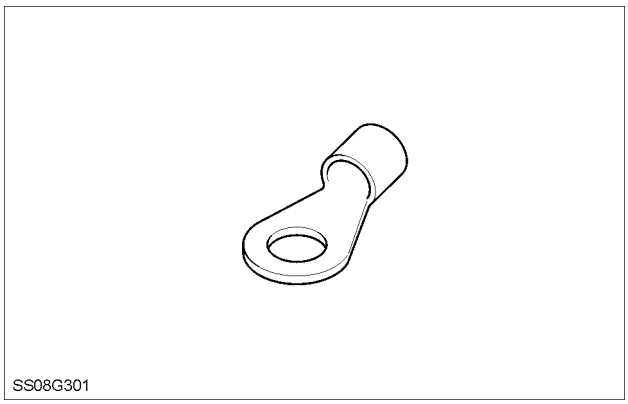

SS08G301 16

RIGHT HAND BEHIND STEPS

PREVIEW - YOUFIXTHIS.COM

Download full manual at youfixthis.com

Wiring harness - Electrical schematic frame 51 EHR CAN 2

MAXXUM 110 Multicontroller [Z9BE40001 -], MAXXUM 110 Multicontroller [Z9BE60001 -], MAXXUM 115 Multicontroller [Z9BE40001 -], MAXXUM 115 Multicontroller [Z9BE60001 -], MAXXUM 120 Multicontroller [Z9BE40001 -], MAXXUM 120 Multicontroller [Z9BE60001 -], MAXXUM 125 Multicontroller [Z9BE40001 -], MAXXUM 125 Multicontroller [Z9BE60001 -], MAXXUM 130 Multicontroller [Z9BE40001 -], MAXXUM 130 Multicontroller [Z9BE60001 -], MAXXUM 140 Multicontroller [Z9BE40001 -], MAXXUM 140 Multicontroller [Z9BE60001 -]

Component	Connector	Description
A002	**X776**	Armrest Control Unit (GARU)
A021	**X305**	El.Hydraulic Remote Valve 1
A022	**X306**	El.Hydraulic Remote Valve 2
A023	**X307**	El.Hydraulic Remote Valve 3
A024	**X308**	El.Hydraulic Remote Valve 4
R016	**X304**	CAN Terminating Resistor
Additional Connectors: **X020**, **X080**, **X088**, **X304**		

Wire Colour Codes

B	Black	S	Slate	G	Green	P	Purple
N	Brown	R	Red	LG	Light Green	K	Pink
LN	Light Brown	O	Orange	U	Blue	W	White
L	Lilac	Y	Yellow	TQ	Turquoise		

PREVIEW - YOUFIXTHIS.COM

Download full manual at youfixthis.com

H4 - DISPLAY SOFTWARE VERSION LEVEL

Common to all sub-systems.

H4 Menu Screen Select Diagram

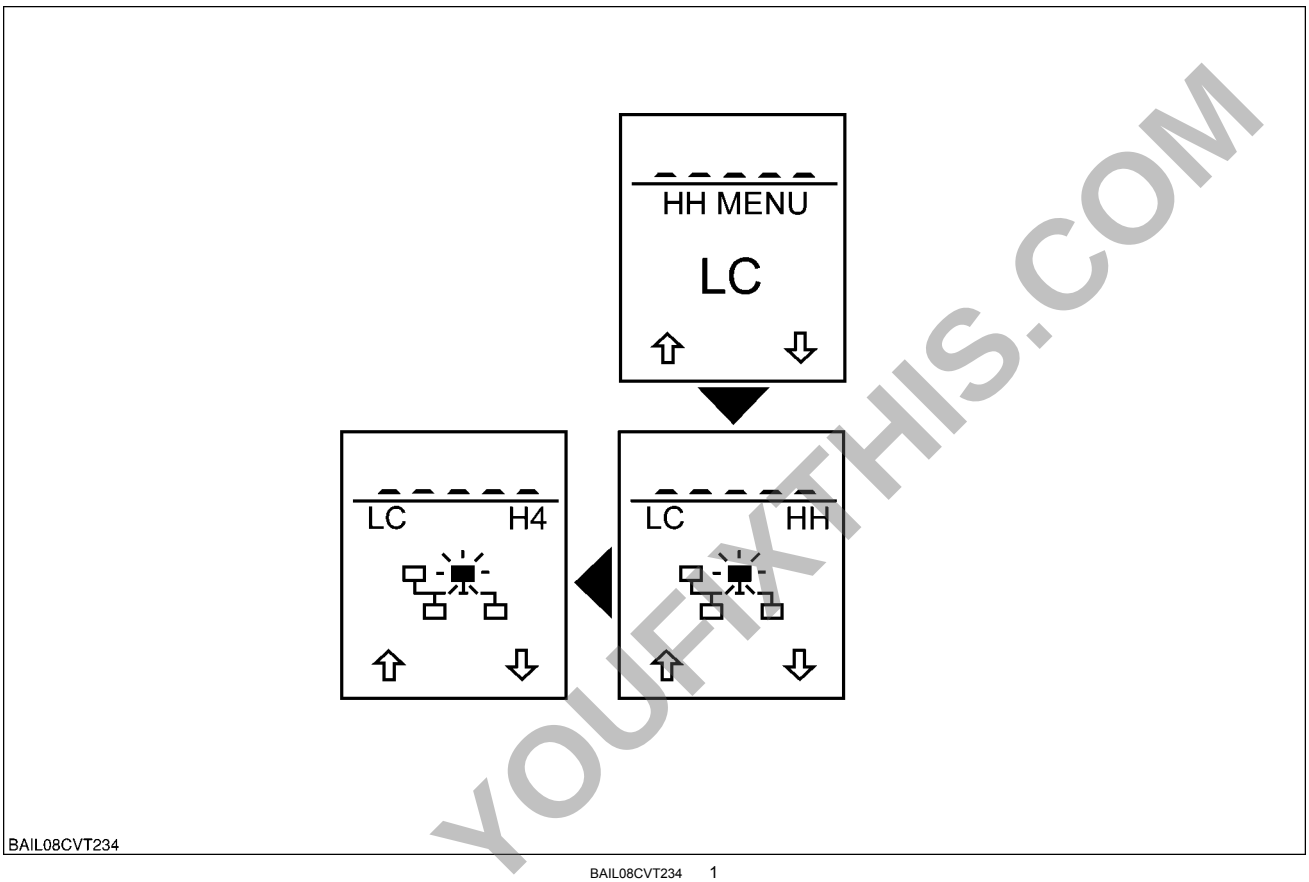

BAIL08CVT234 1

Select the H4 menu by depressing the "menu" key.

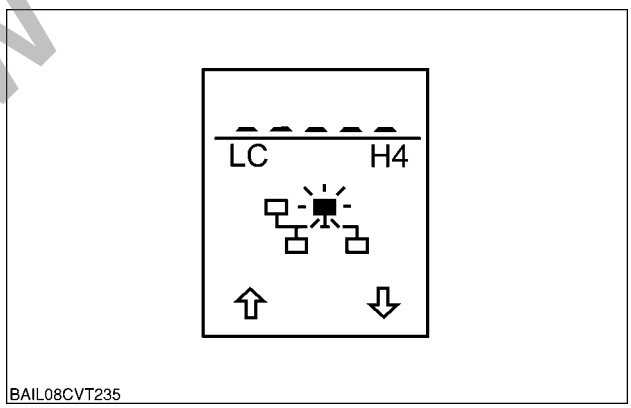

BAIL08CVT235 2

PREVIEW - YOUFIXTHIS.COM

Download full manual at youfixthis.com

Reference	Description	Controller
3156	Grid Heater Relay - No Load	
3157	ECM Not Detected On CAN Bus	
3157	ECM Not Detected On CAN Bus	
3158	Invalid ECM Checksum	
3159	Invalid Engine Reference Torque	
3160	Fan Actuator - Short Circuit to Battery	
3162	Fan Actuator - Open Load	
3163	Fan Actuator - No Load	
3166	Fuel Filter Heater Relay - Short Circuit To Ground	
3167	Fuel Filter Heater Relay - Short Circuit To Battery	
3168	Fuel Filter Heater Relay - No Load	
3169	Fuel Filter Heater Relay - Signal Not Plausible	
3176	Setpoint Of Metering Unit Not Plausible In Overrun	
3177	Engine Overspeed Detected	
3179	Time-out Of CAN Message BC2EDC2	
3180	Time-out Of CAN Message VCM2EDC	
3182	Timeout Of CAN Message RxCCVS	
3185	Timeout Of CAN Message TF	
3188	Cylinder 1 Warning - Open Load	
3192	Cylinder 2 warning - Open Load	
3196	Cylinder 3 Warning - Open Load	
3200	Cylinder 4 Warning - Open Load	
3204	Cylinder 5 Warning - Open Load	
3208	Cylinder 6 Warning - Open Load	
3210	Bank 1 - General Short Circuit To Injector Cable	
3211	Bank 1 - Injector cable Short Circuit Low Side To Ground	
3213	Bank 1 - Unclassifiable Error	
3218	Bank 2 - General Short Circuit On Injector Cable	
3219	Bank 2 - Injector Cable Short Circuit Low Side To Ground	
3221	Bank 2 - Unclassifiable Error	
3227	Injection Processor Error - Internal Reset/Clock Loss/Voltage Too Low	
3228	Injection Processor Error - Unlocked/Initialization Error	
3229	Injection Processor Error - Injections Limited By Software	
3230	Injection Processor Error - SPI Communication Failure	
3231	Injection Processor Error - Internal Reset/Clock Loss/Voltage Too Low	
3232	Injection Processor Error - Unlocked/Initialization Failure	
3233	Injection Processor Error - Test Mode	
3234	Injection Processor Error - SPI Communication Failure	
3238	Engine Controller Internal SPI Communication Error	

PREVIEW - YOUFIXTHIS.COM

Download full manual at youfixthis.com

Vehicles with pneumatic trailer brakes

4. Remove the left-hand drive belt guard.

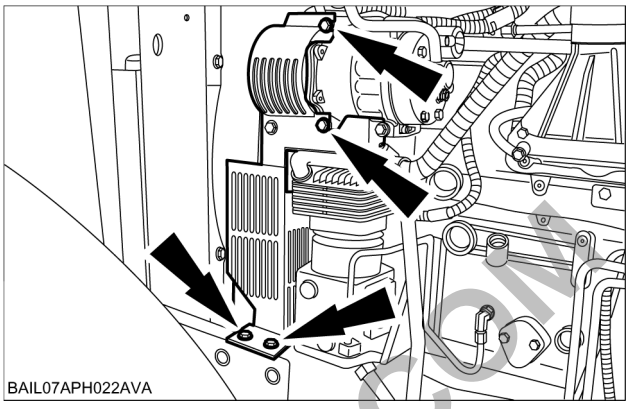

BAIL07APH022AVA 4

Vehicles without pneumatic trailer brakes

5. Remove the left-hand drive belt guard.

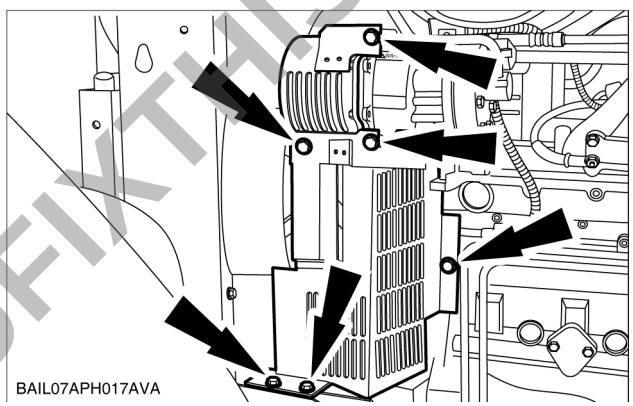

BAIL07APH017AVA 5

All vehicles

6. Remove the engine control unit (ECU).

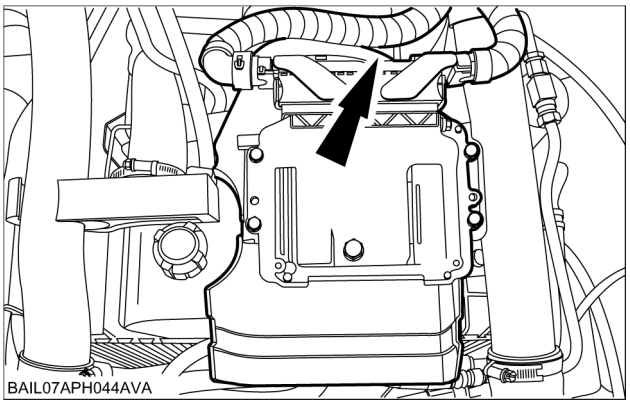

BAIL07APH044AVA 6

PREVIEW - YOUFIXTHIS.COM

Download full manual at youfixthis.com

Control valve - Install (Valve block C1/C2)

MAXXUM 100, MAXXUM 110, MAXXUM 115, MAXXUM 125, MAXXUM 140

Control valve - Exploded view (C.20.C)

Prior operation:
Control valve - Remove (Valve block C1/C2) (C.20.C)

1. Install the transmission control valve and tighten the retaining bolts to the specified torque value.

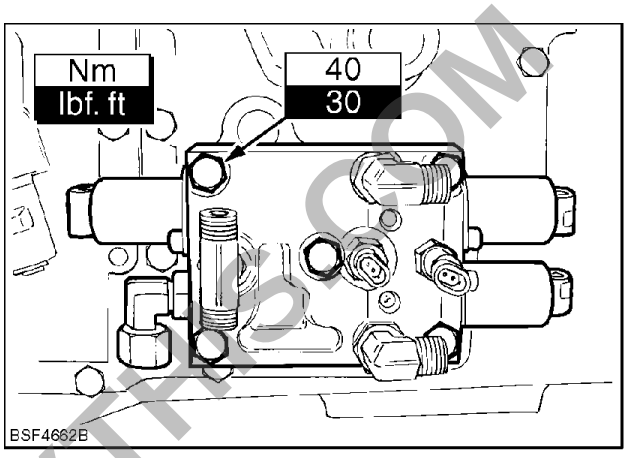

BSF4662B 1

NOTE: *If the transmission is removed, the next operations are not necessary, continue with transmission assemble - see* ***TRANSMISSION Power Shuttle - Assemble (C.20.C)****.*

Next operation:
Reconnect the plugs.
Install the battery tray as described in **TRANSMISSION Power Shuttle - Install (C.20.C)**.
Refill the driveline with the correct specification oil - see **Consumables Lubrications and Coolants**.

PREVIEW - YOUFIXTHIS.COM

Download full manual at youfixthis.com

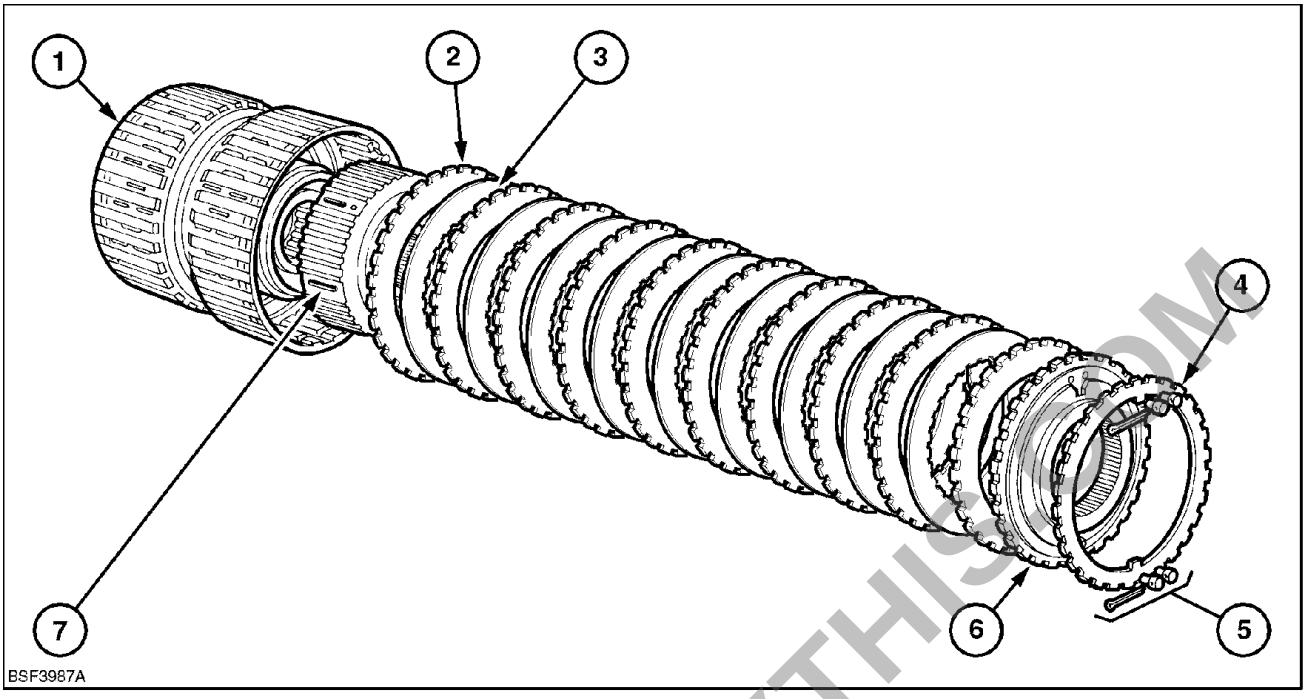

BSF3987A 10

C3 Clutch Friction and Separator Plates - Assembly Order

1 C3/C4 clutch housing
2 Steel plates x 9
3 Friction plates x 9
4 End plate locking ring
5 Locking ring retaining screws and split pins
6 End plate
7 C3 clutch hub

23. Install the clutch hub **(1)** into the clutch housing **(2)**. Install the steel plates and friction plates in the order as shown in Figure **10**.

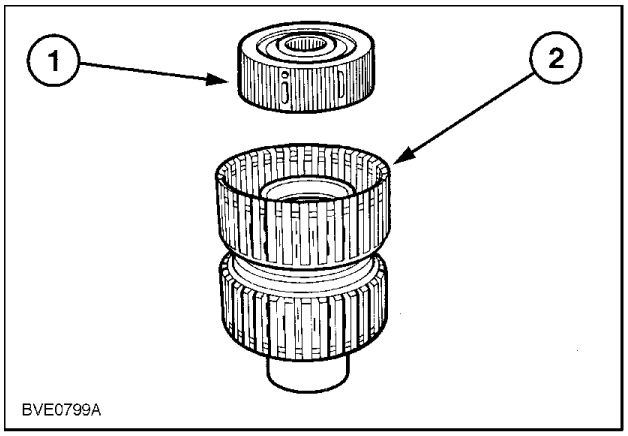

BVE 0799A 11

24. Install the retaining ring **(1)**.
Apply hand pressure and rotate the locking ring **(1)** until the locking ring screw holes line up with the end plate **(2)**.

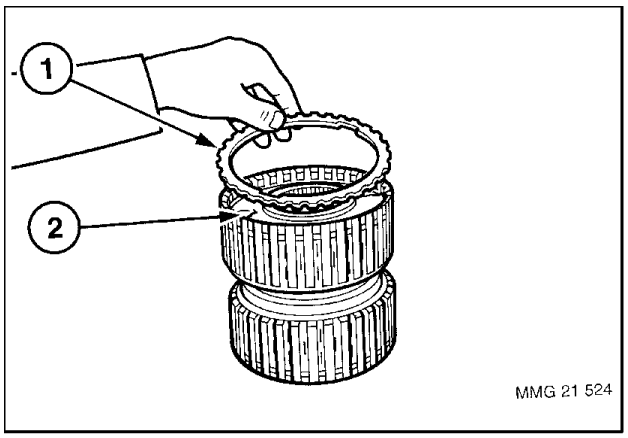

MMG 21 524_235 12

PREVIEW - YOUFIXTHIS.COM

Download full manual at youfixthis.com

FRONT AXLE - Calibrate

MAXXUM 110 Multicontroller [Z7BE50001 - Z9BE60000], MAXXUM 115 Multicontroller [Z7BE50001 - Z9BE60000], MAXXUM 120 Multicontroller [Z7BE50001 - Z9BE60000], MAXXUM 125 Multicontroller [Z7BE50001 - Z9BE60000], MAXXUM 130 Multicontroller [Z7BE50001 - Z9BE60000], MAXXUM 140 Multicontroller [Z7BE50001 - Z9BE60000], MAXXUM 100, MAXXUM 110, MAXXUM 115, MAXXUM 120, MAXXUM 125, MAXXUM 130, MAXXUM 140

Steering Angle Sensor

NOTE: *The calibration procedure is controlled by the electronic management system. To prevent inadvertent movement of the tractor, park the tractor away from any obstacles, firmly apply the parking brake and block the wheels, front and rear. Check that the Ground speed display is Zero before commencing.*

1. Install the diagnostic connector **380000843** into the diagnostic socket **(1)**.

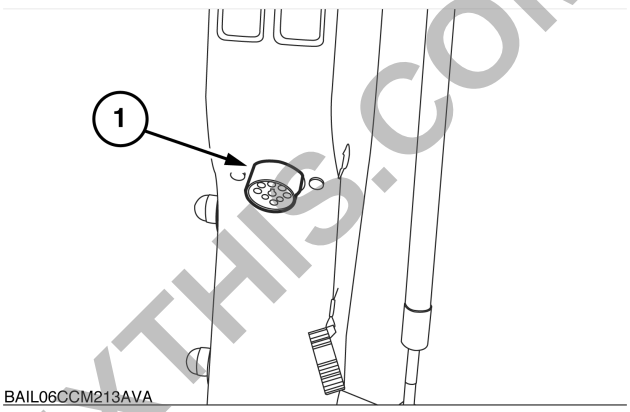

BAIL06CCM213AVA 1

NOTE: *The illustrations in this procedure depict the DS module (16x16 transmission), and DT module (16x16 transmission with multicontroller), controllers for other transmission variants (DR) will be displayed as appropriate, the actual steps remain the same as below.*

2. Use the "h", "m" and "dimming" keys on the instrument cluster to navigate the HH menu's to H1 and the Difflock symbol on the DR (24x24 transmission) or DS (16x16 transmission) or DT (16x16 transmission with multicontroller) controller.
   The lower central display will show "CAL".

PREVIEW - YOUFIXTHIS.COM

Download full manual at youfixthis.com

Clutch Multi plate clutch - Dynamic description

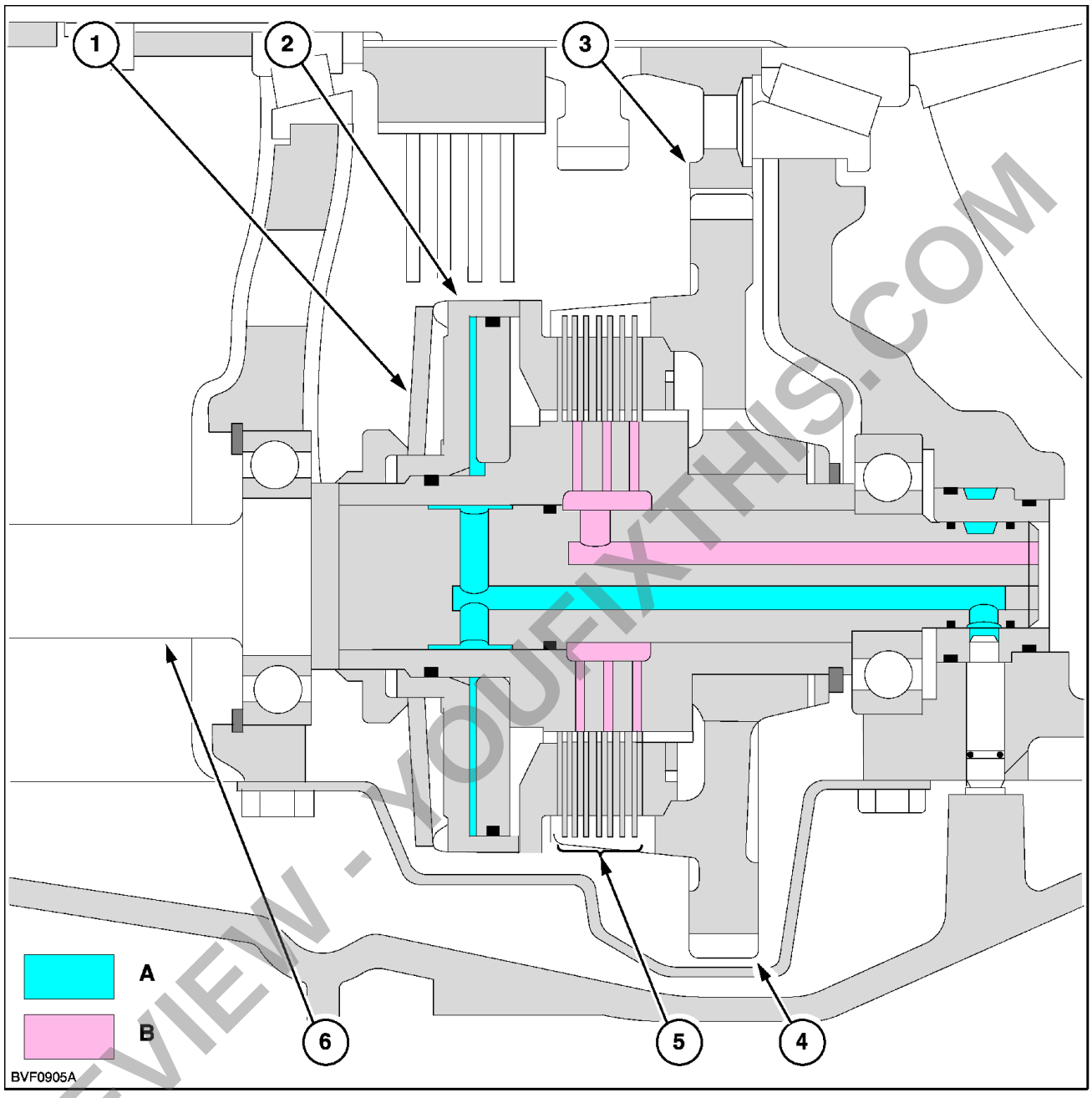

BVF0905A 1

Four Wheel Drive Multi-Wet Plate Clutch (Engaged)			
1	Belleville washer	2	Control piston
3	Drive gear	4	Driven gear
5	Friction and steel plates	6	Driveshaft

Figure Colour Key			
A	Return to reservoir	B	Lubrication

The four wheel drive clutch solenoid is de-energized and the belleville washer **(1)** applies a force to the control piston **(2)** which compresses the friction and steel plates **(5)**. Drive is transferred from the drive gear **(3)** mounted on the rear axle pinion to the driven gear **(4)** and through the clutch to the front axle via the driveshaft **(6)**.

PREVIEW - YOUFIXTHIS.COM

Download full manual at youfixthis.com

Transition Mode

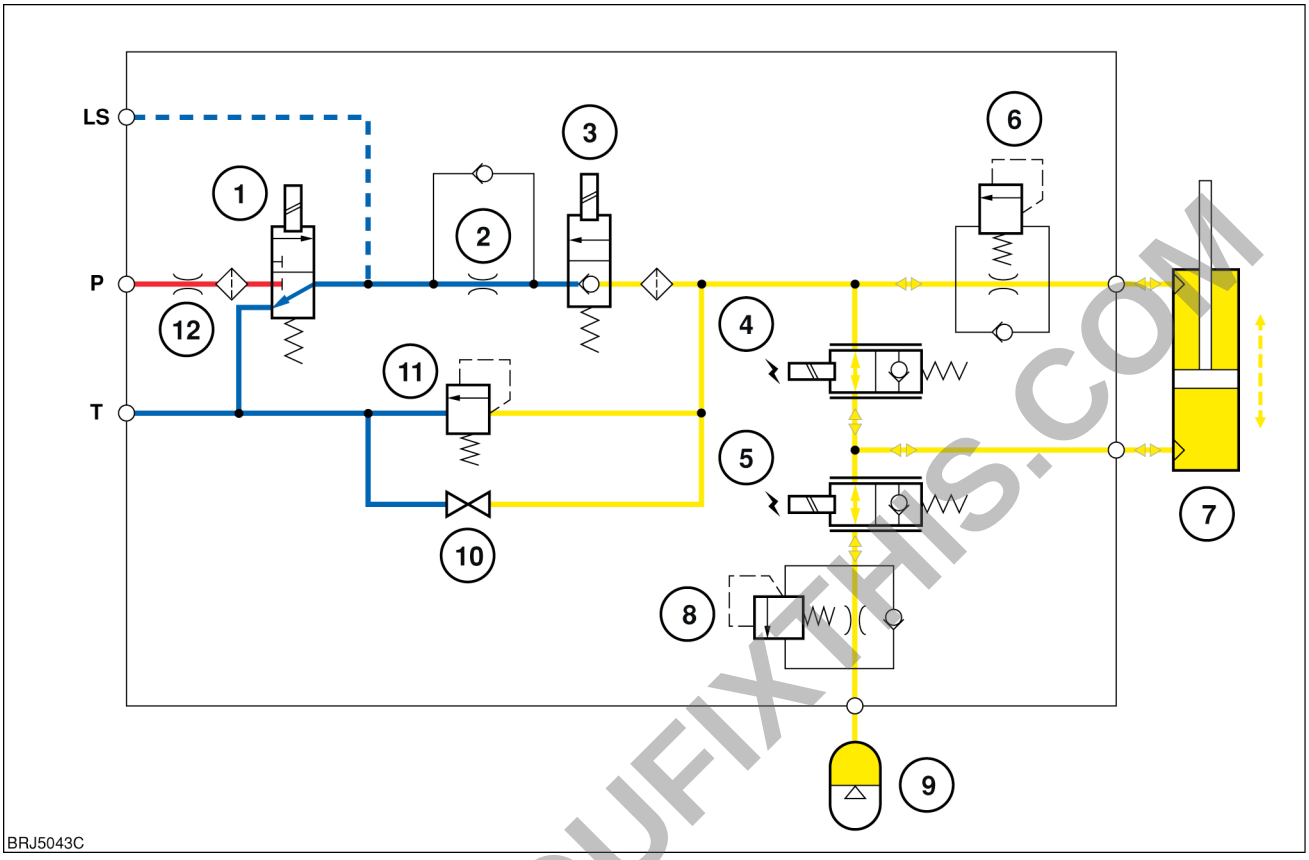

BAIL07APH377FSA 3

1	Raise Coil	2	Lower Orifice
3	Lower Coil	4	Lockout Coil #3
5	Lockout Coil #4	6	Rebound Discpack
7	Suspension Cylinder	8	Compression Discpack
9	Accumulator	10	Manual Override Screw
11	Relief Valve	12	Raise Orifice

Slow opening of coil **(4)** allows oil from the rod side of the cylinder to the piston chamber and the accumulator. If **(5)** is energised the slow opening of this coil allows oil to flow to the piston side of the cylinder , (as in the suspension raise mode).

PREVIEW - YOUFIXTHIS.COM

Download full manual at youfixthis.com

Compressor - Remove

Prior operation:
Discharge the air conditioning system - see **ENVIRONMENT CONTROL Heating, ventilation and air-conditioning - Discharging (E.40.D)**.
Remove the air conditioning drive belt - see **Fan and drive Belt - Remove (B.50.A)**.

1. Disconnect the compressor electrical connector.

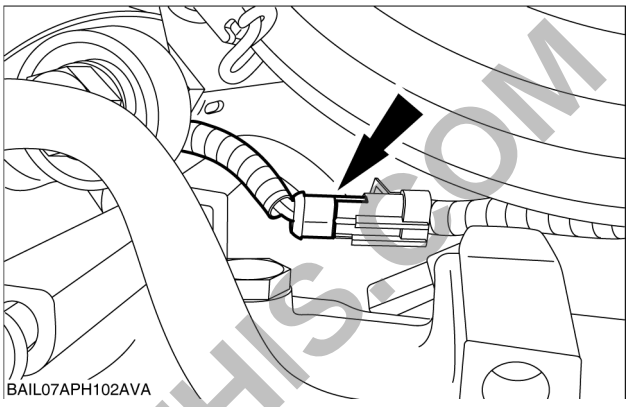

BAIL07APH102AVA 1

2. Disconnect the compressor supply and return pipes.

NOTE: *Cap and plug all fittings to prevent any dirt entering the system.*

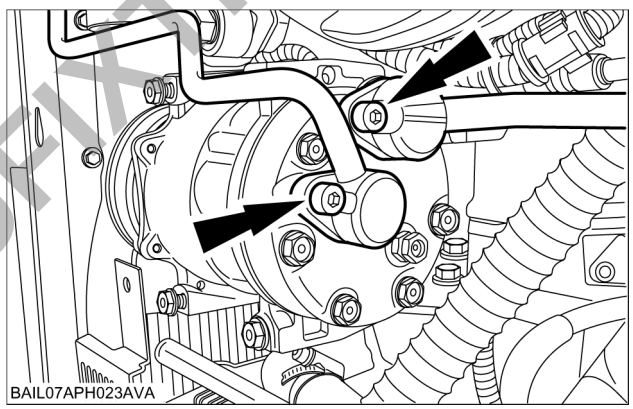

BAIL07APH023AVA 2

3. Remove the compressor.

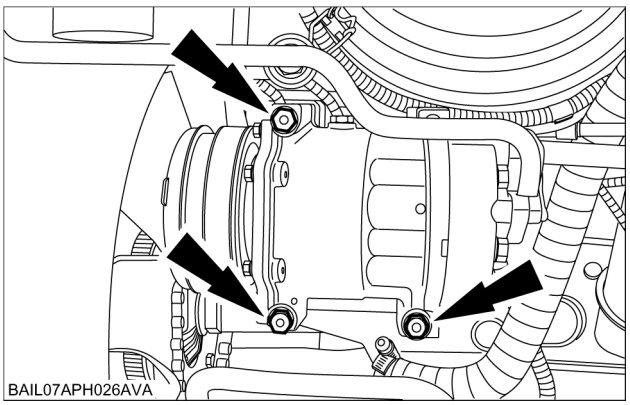

BAIL07APH026AVA 3

PREVIEW - YOUFIXTHIS.COM

Download full manual at youfixthis.com

PREVIEW ONLY

You're viewing 25 of 3971 pages

The full manual includes:

- All 3971 pages, complete
- Searchable PDF (find any keyword)
- No watermarks
- Instant download
- Print-ready quality

GET FULL MANUAL NOW

Case IH Maxxum 100, Maxxum 110, Maxxum 115, Maxxum 120, Maxxum 125, Maxxum 130, Maxxum 140 Service Manual

Scan or click anywhere
youfixthis.com

Click anywhere on this page to get the full manual