PREVIEW-YOUFIXTHIS.COM

Steiger® 370 / 420 / 470 / 500 / 540 / 580 / 620
Quadtrac® 470 / 500 / 540 / 580 / 620
Tier 4B (final)

Tractor

PIN ZEF300001 and above

SERVICE MANUAL

Part number 47680528
1st edition English
March 2014
Copyright © 2014 CNH Industrial America LLC. All Rights Reserved.

CASE IH AGRICULTURE

5. Fill with new oil into the engine oil fill **(1)**.

NOTE: *Total oil refill capacity will be determined by how completely the crankcase drains. Do not fill above the high mark on the dipstick* ***(2)*** *when refilling.*

6. Operate the engine for five minutes at **1000 RPM**. Check for oil leaks at the filter base and drain plug.
7. Stop the engine. Wait approximately five minutes for the oil to return to the oil pan. Check the oil level on the dipstick **(2)** and add oil if needed.

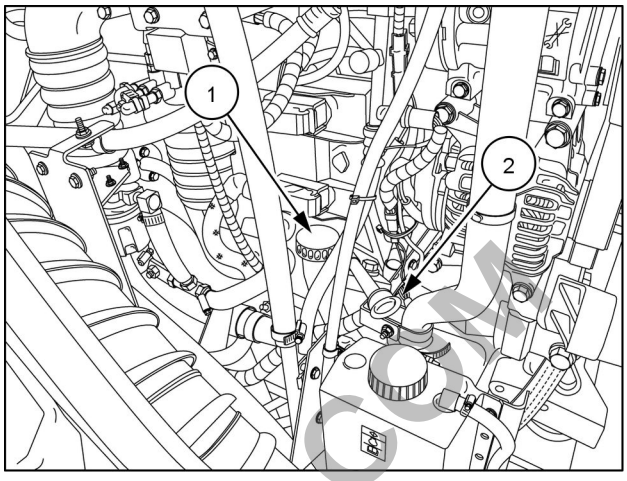

RAIL13TR01857AA 6

PREVIEW - YOUFIXTHIS.COM

Download full manual at youfixthis.com

3. Pull back, then up and remove primary filter.

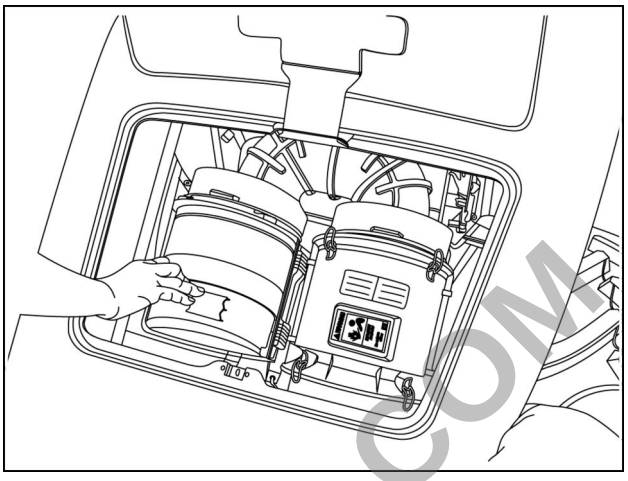

RCPH10FWD838BAM 3

4. Pull back and remove secondary filter.

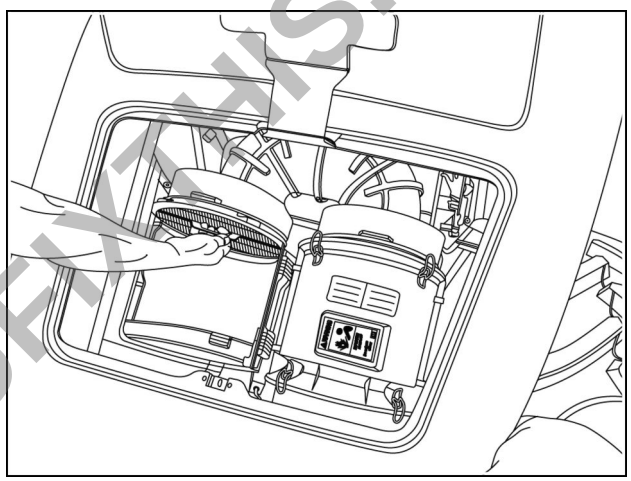

RCPH10FWD840BAM 4

5. Clean inside of housing.

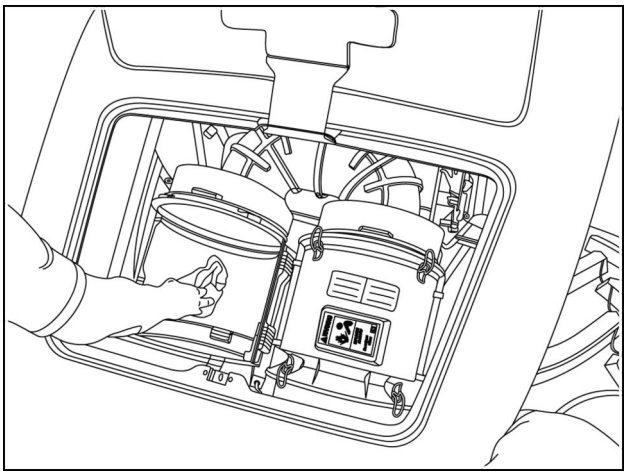

RCPH10FWD843BAM 5

6. Repeat **2** through **5** for right hand side filter.

PREVIEW - YOUFIXTHIS.COM

Download full manual at youfixthis.com

3. Remove the cab trim below the right hand window.

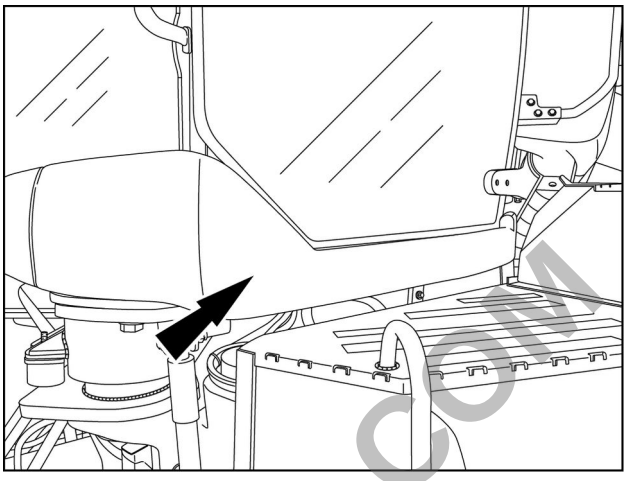

RAIL13TR02466AA 3

4. Drain the fluid out of the tank into an appropriate size container.

NOTE: *The tank capacity is* ***235 L*** *(****62 US gal****) for wheeled models and* ***242 L*** *(****64 US gal****) for Quadtrac models.*

5. Reinstall the drain plug.

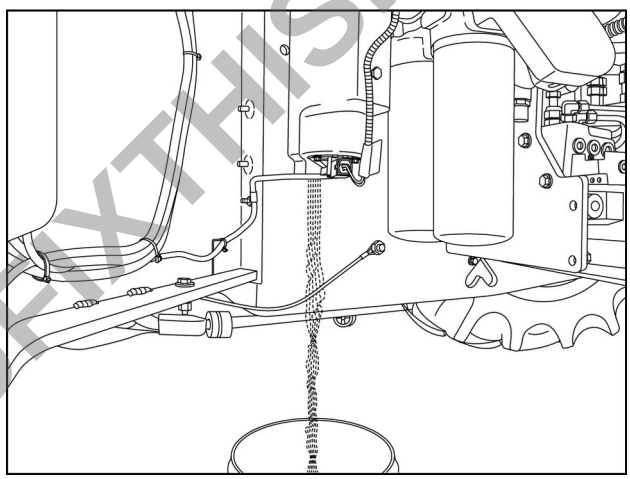

RAIL13TR02483AA 4

6. Remove the access door stop **(1)**.
7. Remove the two bolts **(2)** securing the electrical panel to the fender.

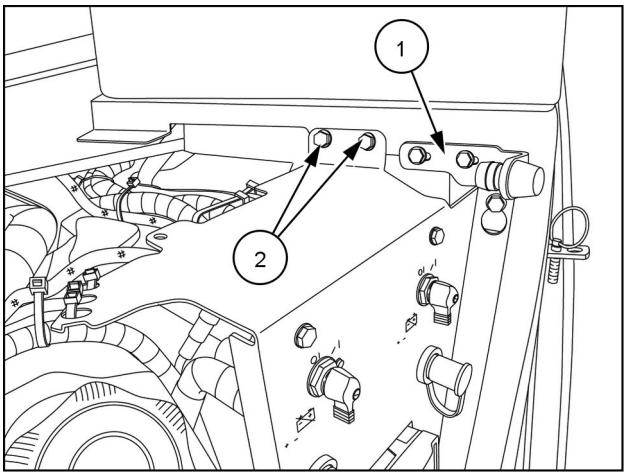

RAIL13TR02467AA 5

PREVIEW - YOUFIXTHIS.COM

Download full manual at youfixthis.com

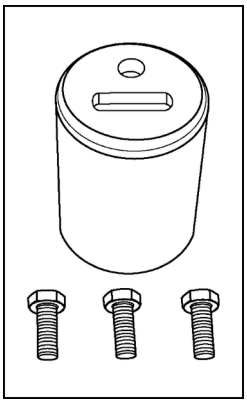

5

CAS2655 5th Shaft Spring Compressor

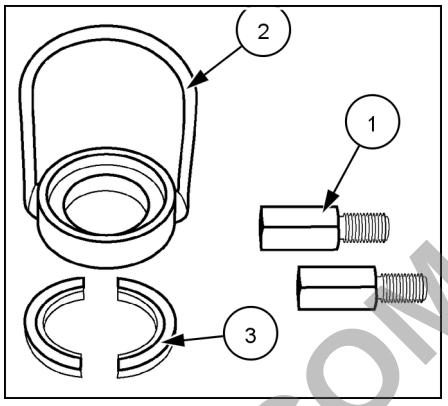

6

1. **CNH299160** Puller Adapters
2. **CNH299062** Shaft Lifting Bail (2nd Shaft)
3. **CNH299063** Inserts (2nd Shaft)

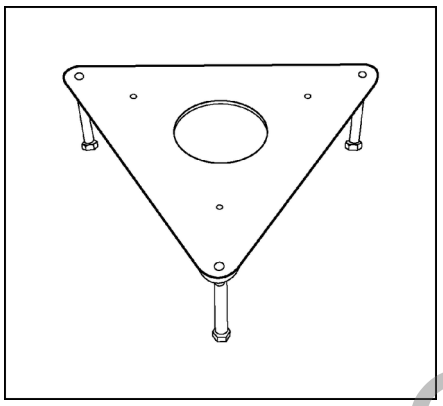

7

CAS2199-1 Shaft Holding Fixture Base

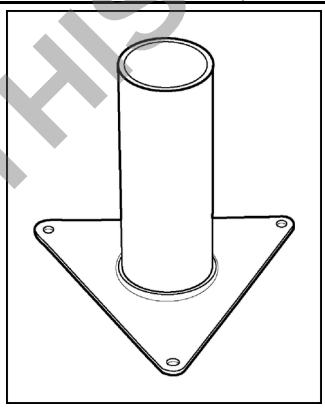

8

CAS2199-2 Shaft Holding Fixture Upright

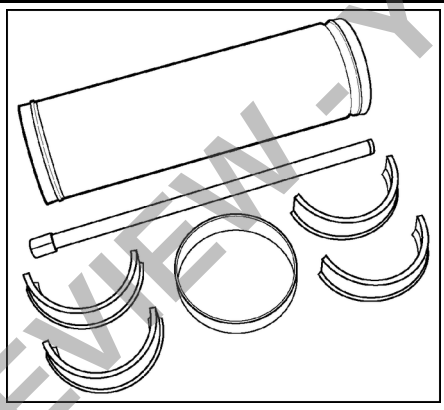

9

380002491 Bearing Puller and Collets

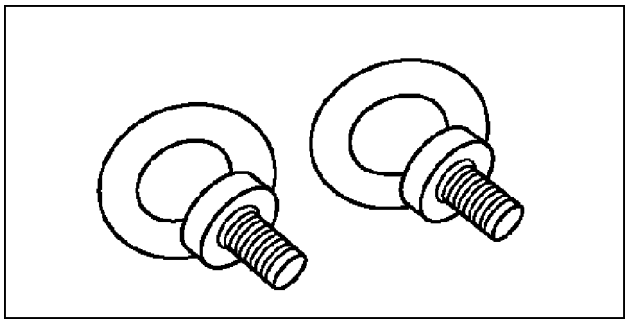

RCPH11FWD260BAC 10

CAS2617 Transmission Eyebolt Set

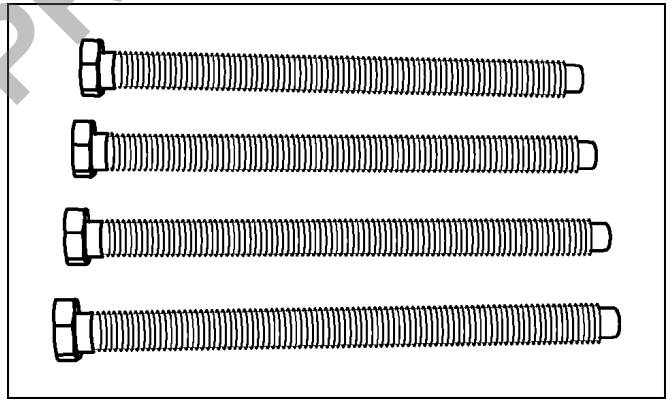

11

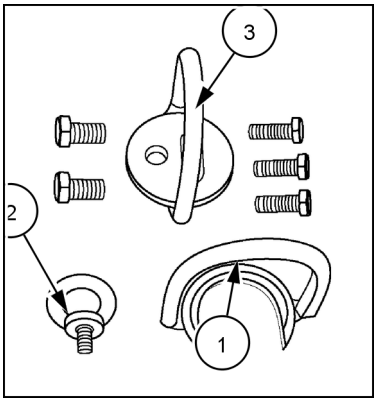

12

PREVIEW - YOUFIXTHIS.COM

Download full manual at youfixthis.com

Transmission control valve - Exploded view - Range selector valve

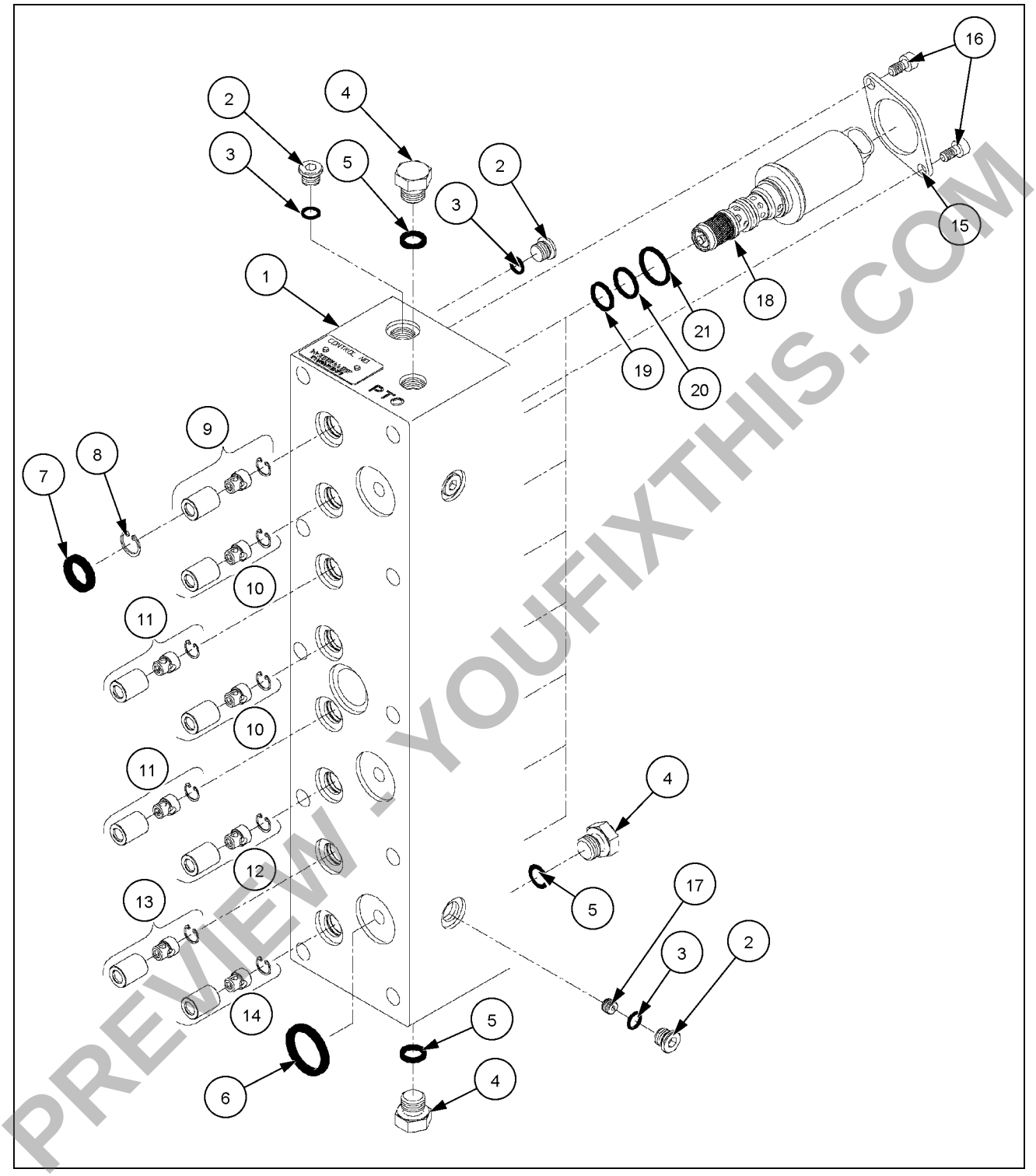

RCPH10FWD057HAG 1

1. Range selector valve body
2. Plug
3. O-ring
4. M14 plug
5. O-ring
6. O-ring
7. O-ring
8. Internal snap ring
9. **3.45 mm** check valve assembly
10. **2.51 mm** check valve assembly
11. **2.36 mm** check valve assembly
12. **2.82 mm** check valve assembly
13. **5.54 mm** check valve assembly
14. **4.80 mm** check valve assembly
15. Retainer
16. Screw
17. Orifice plug
18. PWM valve
19. O-ring
20. O-ring
21. O-ring

PREVIEW - YOUFIXTHIS.COM

Download full manual at youfixthis.com

4. Remove the shims **(1)** and the bearing spacer **(2)**.

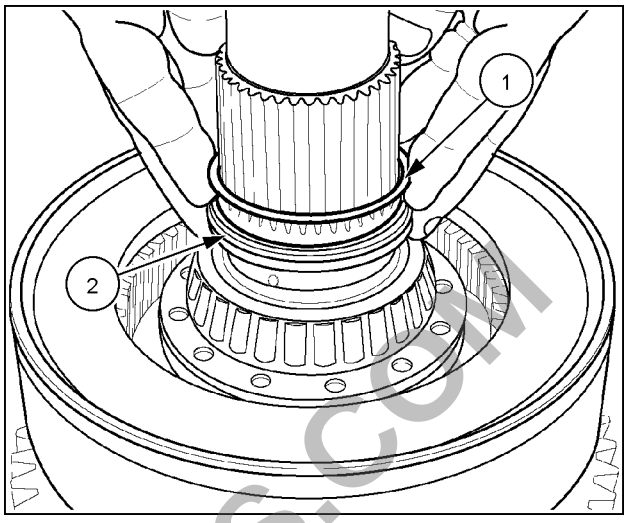

RCPH10FWD402BAC 4

5. Remove the end plate retaining ring.

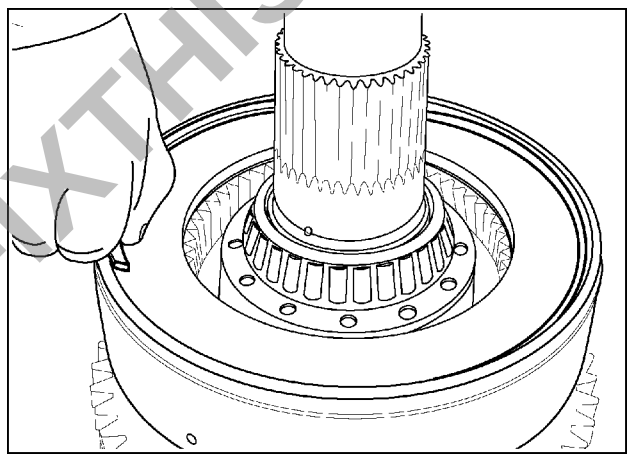

RCPH10FWD403BAC 5

6. Remove the end plate and the clutch plates.

NOTICE: *The clutch friction and steel plates have been selected as a set. Use shipping tags to wire the pack together and mark them for correct sequence and location. Do not mix with other plates.*

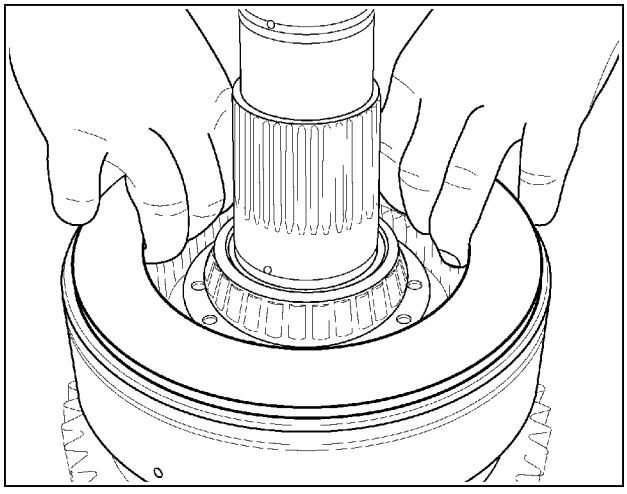

RCPH10FWD404BAC 6

PREVIEW - YOUFIXTHIS.COM

Download full manual at youfixthis.com

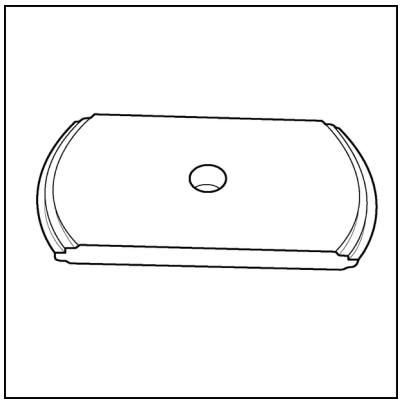

RCPH10FWD450ABJ 3

CAS2663 Final drive housing bearing cup remover/installer

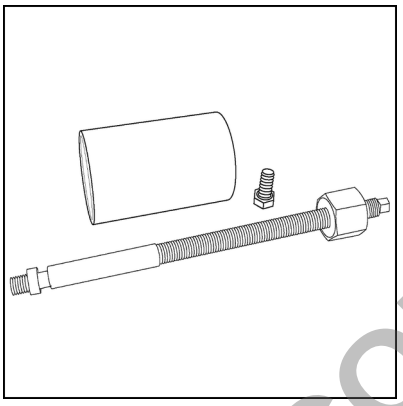

RCPH10FWD453ABJ 4

CAS2666 Axle shaft/pinion bearing cone installer

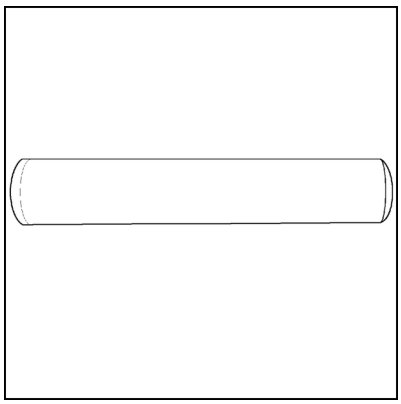

RCPH10FWD328ABJ 5

CAS2750 Axle shaft outer bearing installer

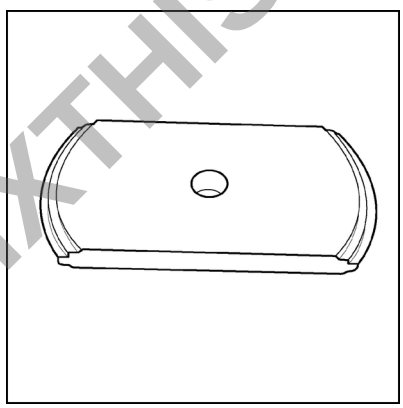

RCPH10FWD468ABJ 6

CAS2667 CNH299041 Final drive housing inner bearing cup remover

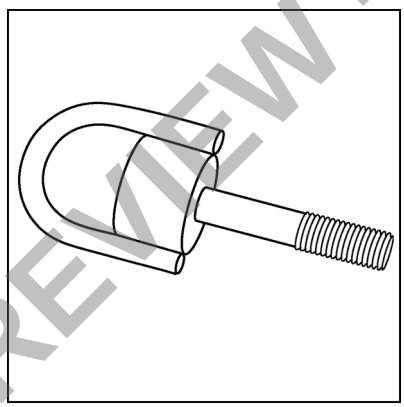

RCPH10FWD452ABJ 7

380002920 Axle shaft lifting eye

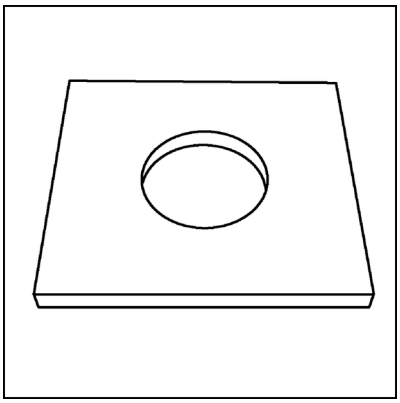

RCPH10FWD470ABJ 8

CAS2668 CNH299051 Axle shaft outer bearing press plate

PREVIEW - YOUFIXTHIS.COM

Download full manual at youfixthis.com

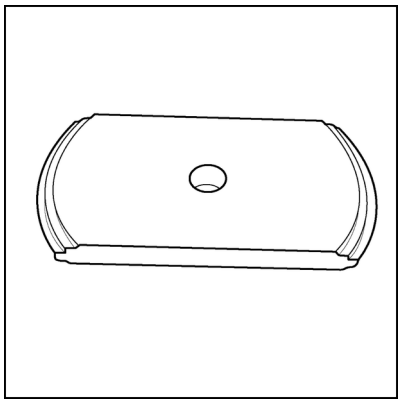

RCPH10FWD450ABJ 3

CAS2663 Final drive housing bearing cup remover/installer

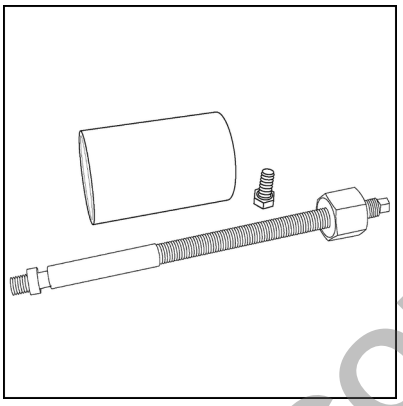

RCPH10FWD453ABJ 4

CAS2666 Axle shaft/pinion bearing cone installer

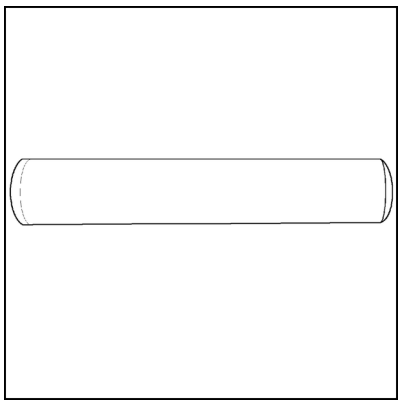

RCPH10FWD328ABJ 5

CAS2750 Axle shaft outer bearing installer

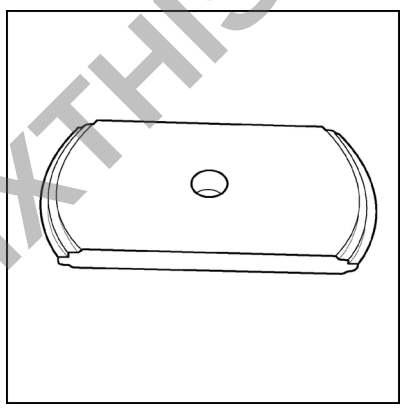

RCPH10FWD468ABJ 6

CAS2667 CNH299041 Final drive housing inner bearing cup remover

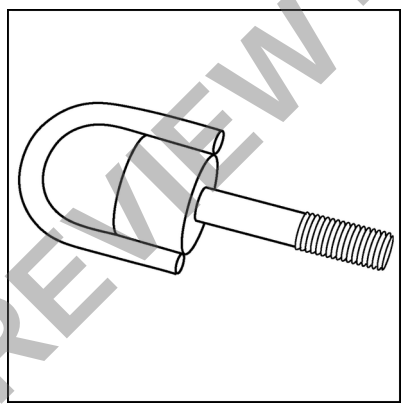

RCPH10FWD452ABJ 7

380002920 Axle shaft lifting eye

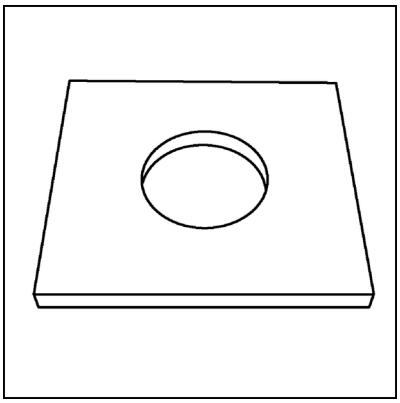

RCPH10FWD470ABJ 8

CAS2668 CNH299051 Axle shaft outer bearing press plate

PREVIEW - YOUFIXTHIS.COM

Download full manual at youfixthis.com

Power Take-Off (PTO) control valve - Exploded view - PTO lubrication solenoid valve and PTO PWM solenoid valve.

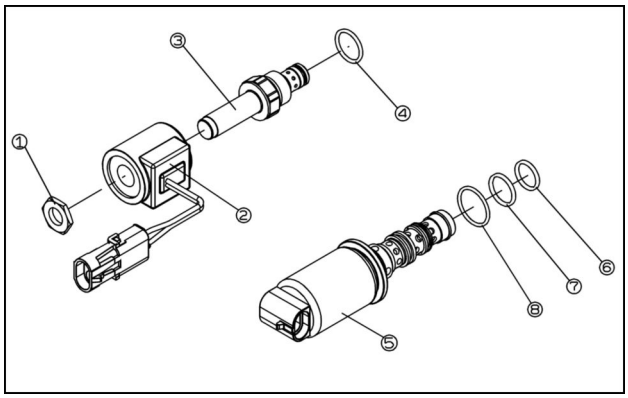

RCPH10FWD085BBJ 1

1. Nut - Lube valve solenoid	3. Lube valve spool	5. PWM solenoid	7. O-ring
2. Lube valve solenoid	4. O-ring	6. O-ring	8. O-ring

PREVIEW - YOUFIXTHIS.COM

Download full manual at youfixthis.com

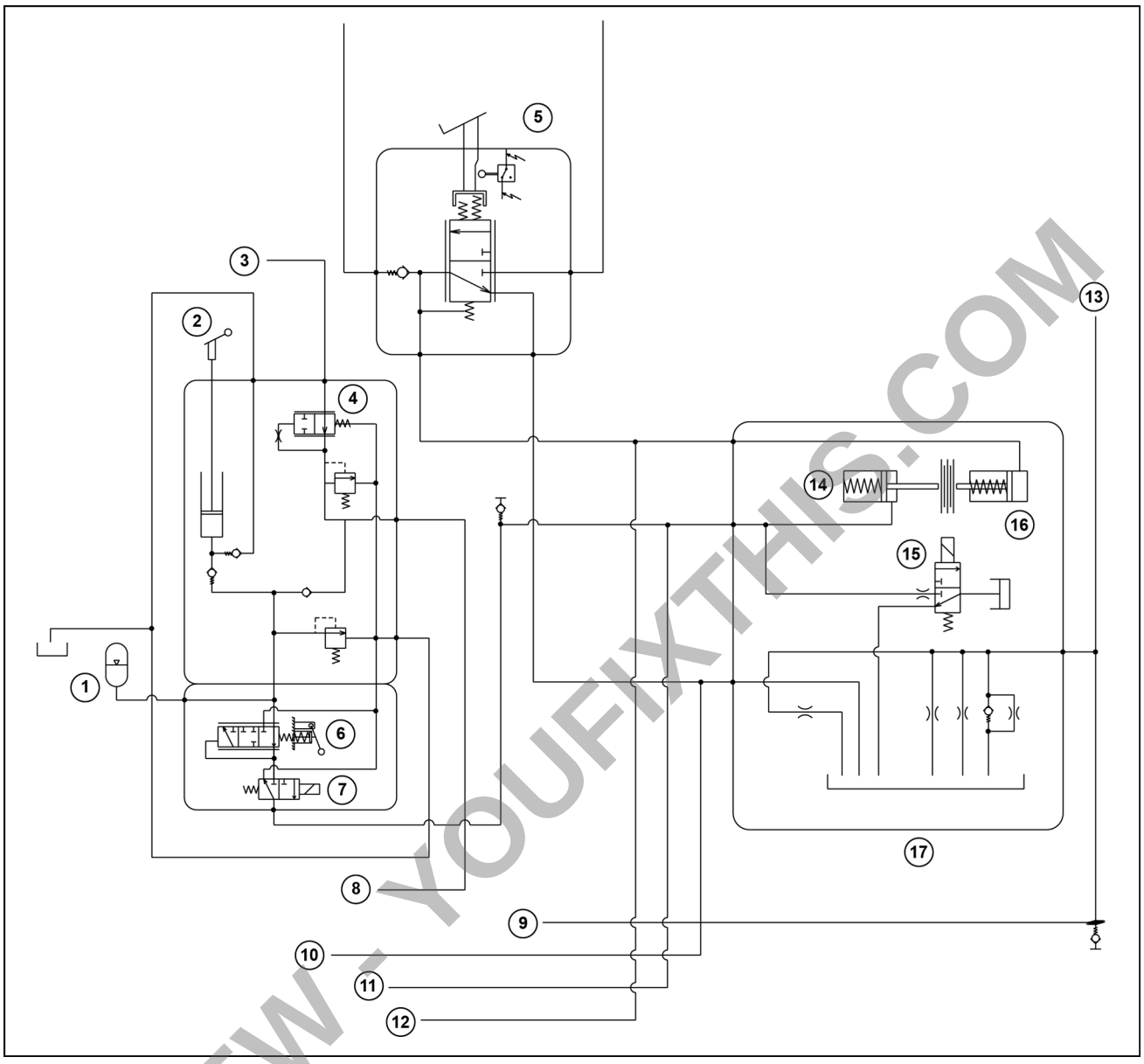

RCIL11FWD038FAE 5

Tow/park brake valve with secondary braking system schematic

1. Secondary braking accumulator	10. Axle drain line
2. Tow valve actuation pump	11. Park brake supply to rear axle
3. Supply from pressure and flow compensated piston pump (PFC)	12. Service brake supply to rear axle
4. Pressure reducing valve	13. Lube pump supply
5. Service brake valve	14. Park brake
6. Secondary braking actuation spool	15. Front diff lock solenoid
7. Park brake solenoid	16. Service brake
8. Regulated supply to remote valve manifold	17. Front axle (500 and 600 series axle)
9. Axle lube to rear axle	

PREVIEW - YOUFIXTHIS.COM

Download full manual at youfixthis.com

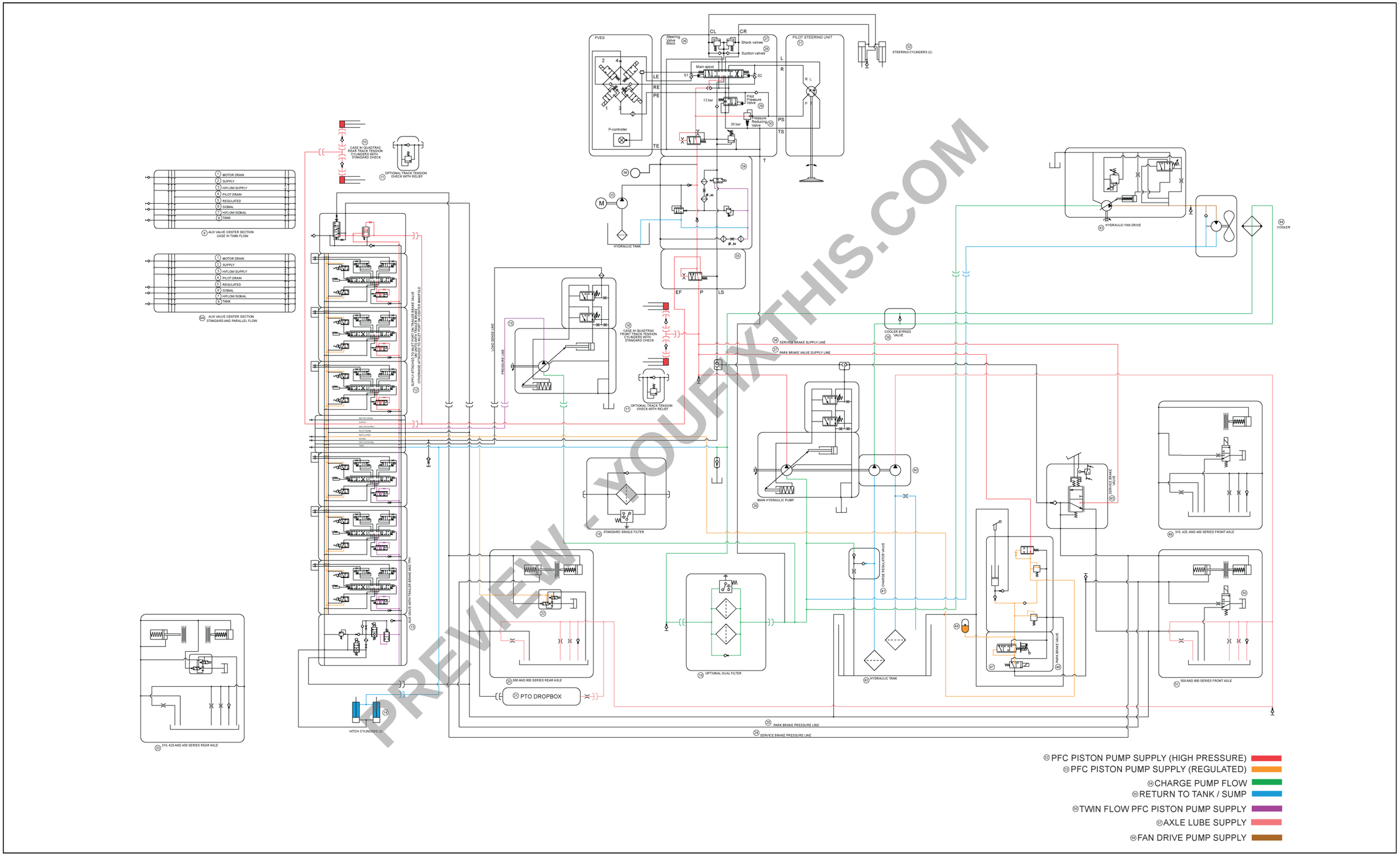

PREVIEW - YOUFIXTHIS.COM

RAIL13TR04969JA 1

Download full manual at youfixthis.com

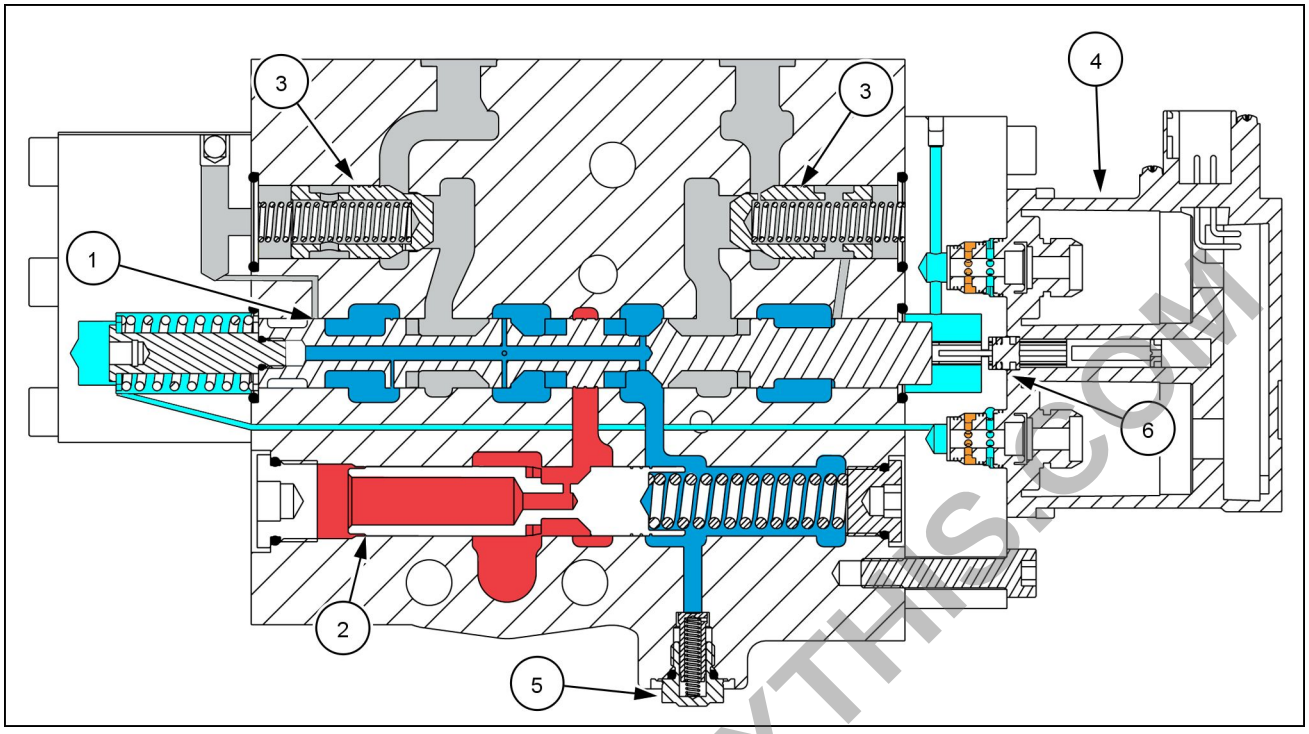

RAIL13TR04646FA 3

PFC pump pressure	Return to tank pressure
Remote valve operating pressure	Trapped oil
Pilot pressure	Pilot return pressure
1. Main valve spool	4. Extend/retract solenoid valve assembly with microprocessor (pilot head)
2. Flow control spool	5. Signal check
3. Lock check	6. Spool position sensor

PREVIEW - YOUFIXTHIS.COM

Download full manual at youfixthis.com

Drawbars and towing hitches - Remove

1. Park the tractor on level ground. Remove the switch key. Clean the area around the drawbar. Install the center hinge locking blocks.

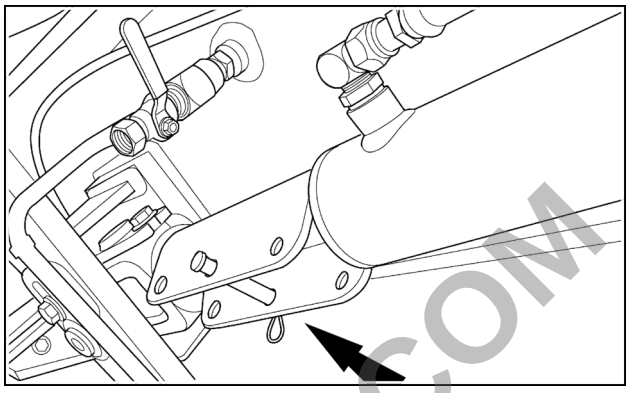

RCPH09FWD010FAM 1

2. Remove the front drawbar pin retaining bolt.

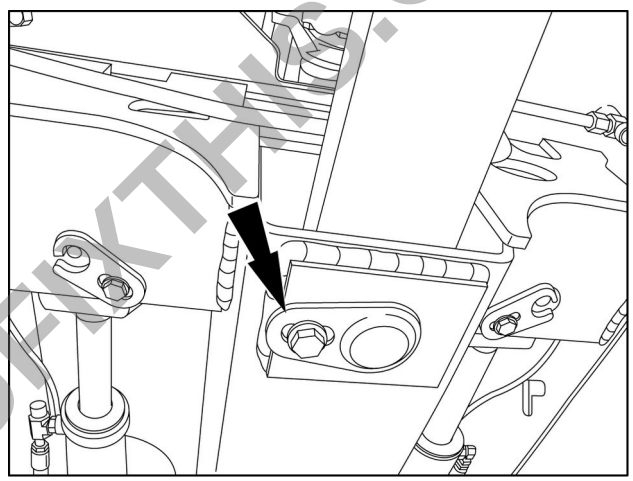

RAIL12TR03331AA 2

3. Insert a **24 mm** impact socket **(1)** and a **16 mm** nut and bolt **(2)** positioned between the frame and top of drawbar pin as shown.
4. Turn the nut or bolt **(2)** to press the front drawbar pin out.

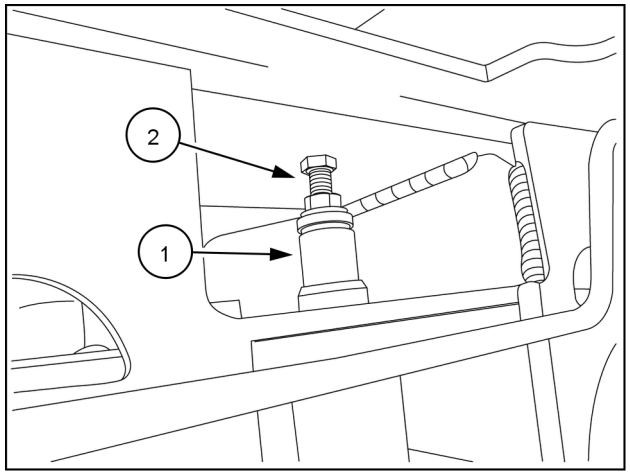

RAIL12TR03332AA 3

PREVIEW - YOUFIXTHIS.COM

Download full manual at youfixthis.com

3. Label then disconnect steering hoses at fittings on front frame. Do both sides.

NOTE: *Plug and cap disconnected hoses and fittings.*

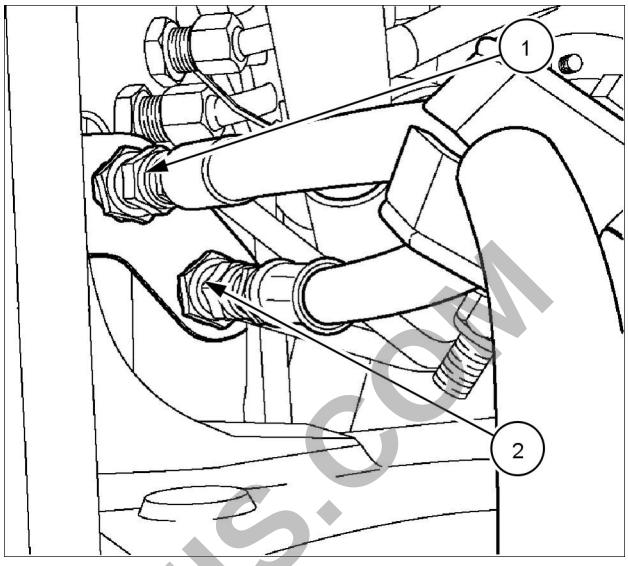

RCPH11FWD283BAC 3

4. Remove the left and right hand steering cylinders.

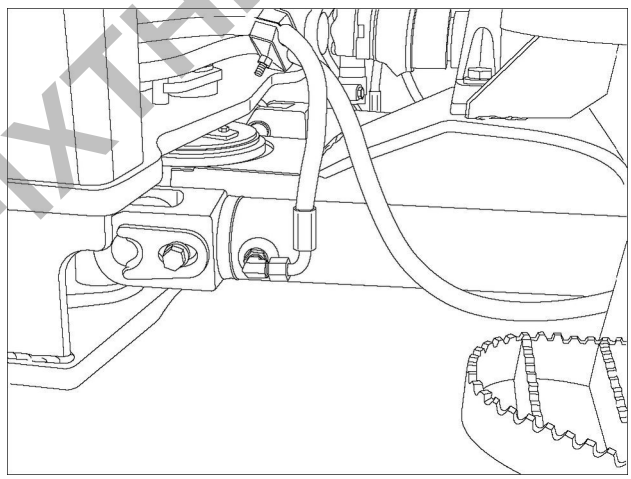

RCPH11FWD284BAC 4

5. Rotate the fuel shut off valve to the OFF position.

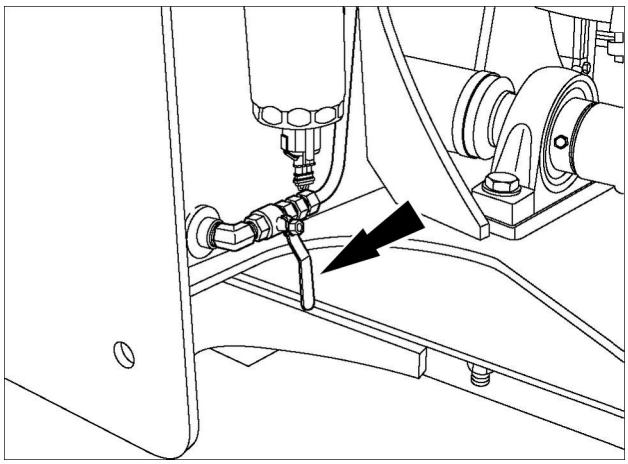

RCPH11FWD285BAC 5

PREVIEW - YOUFIXTHIS.COM

Download full manual at youfixthis.com

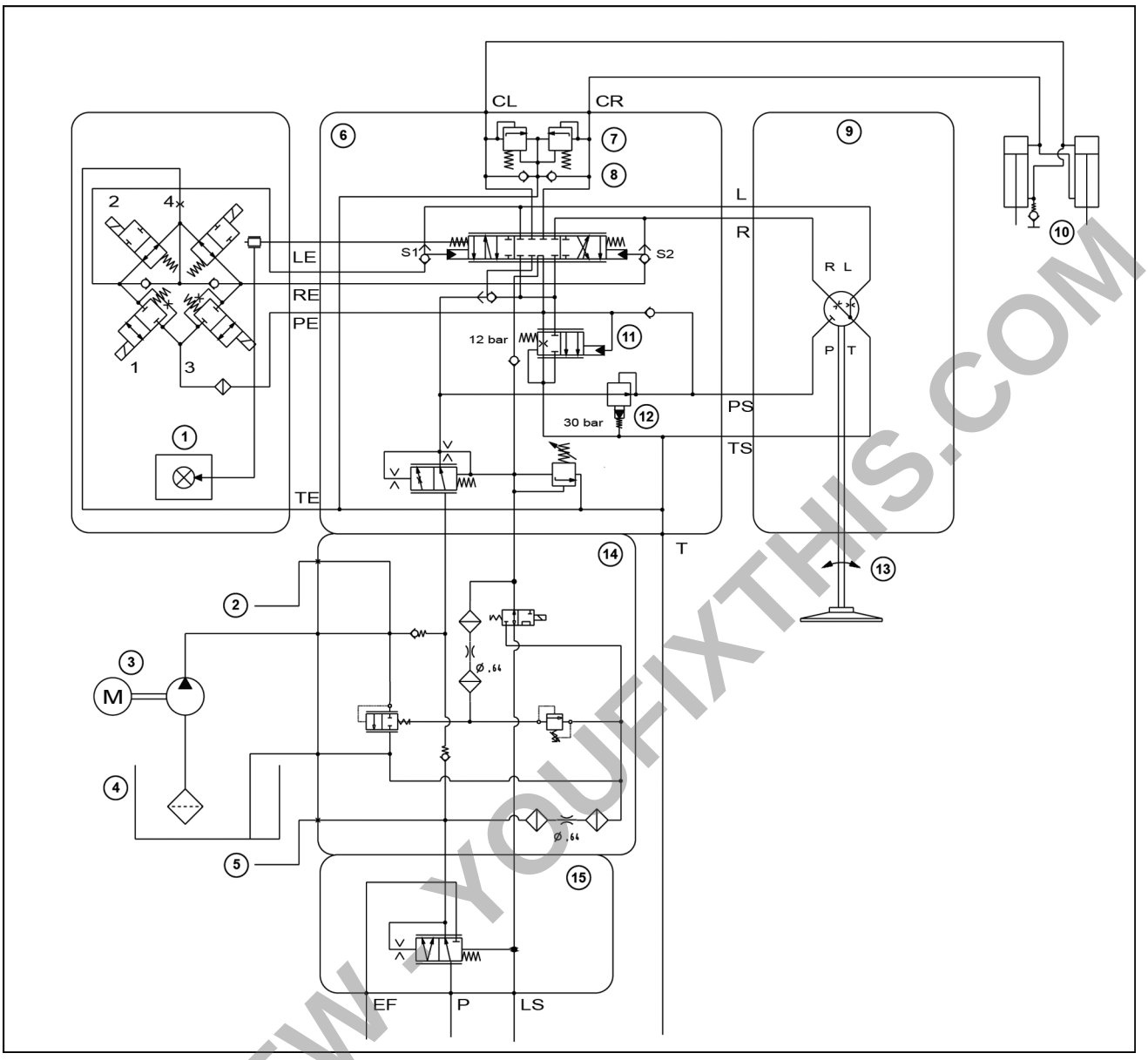

RCIL11FWD036FAE 6

Electro hydraulic power steering with secondary steering system schematic

1. P-controller	10. Steering cylinders
2. Secondary pressure sensor	11. Pilot pressure valve
3. Secondary steering 24 volt motor/pump assembly	12. Pressure reducing valve
4. Reservoir	13. Steering column
5. Primary pressure sensor	14. Secondary steering valve section
6. Steering valve block	15. Steering priority valve section
7. Shock valves	(EF) Excess flow
8. Suction valves	(P) Pressure supply
9. Pilot steering unit	(LS) Load sense

PREVIEW - YOUFIXTHIS.COM

Download full manual at youfixthis.com

Rubber track - Remove - Quadtrac models

Quadtrac 470 Europe model [ZEF300001 -]	WE
Quadtrac 540 Europe model [ZEF300001 -]	WE
Quadtrac 540 Europe scraper model [ZEF300001 -]	WE
Quadtrac 580 Europe model [ZEF300001 -]	WE
Quadtrac 580 Europe scraper model [ZEF300001 -]	WE
Quadtrac 620 Europe model [ZEF300001 -]	WE
Steiger 500 QT Europe model [ZEF300001 -]	WE
Steiger 500 QT Europe scraper model [ZEF300001 -]	WE

Park the tractor on a level surface. Remove the switch key.

1. Loosen (do not remove) the front and rear outside idler wheel mounting bolts.

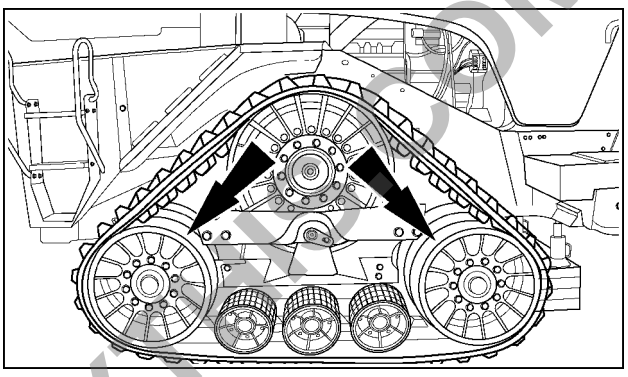

RCPH10FWD135AAC 1

2. Remove the cap from the track tension cylinder bleed valve.

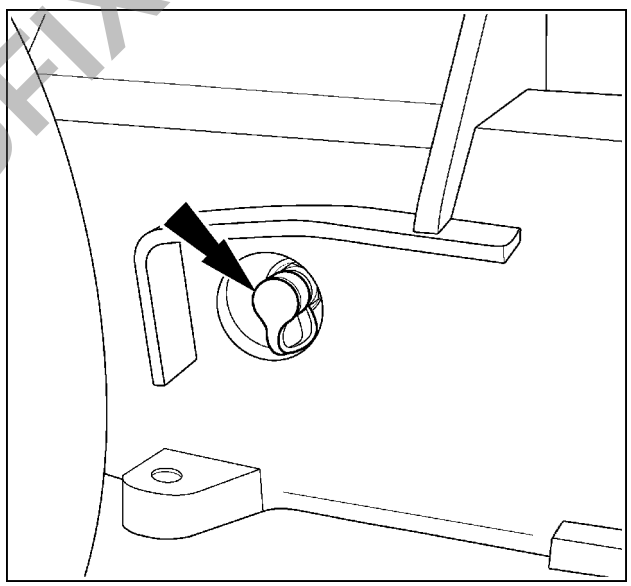

RCPH10FWD136BAC 2

3. Install the CAS31–3183 drain valve and hose, supplied with the tractor, on the cylinder bleed valve fitting. Place the end of the drain valve hose into a **3.8 l** (**1.0 US gal**) or larger container.

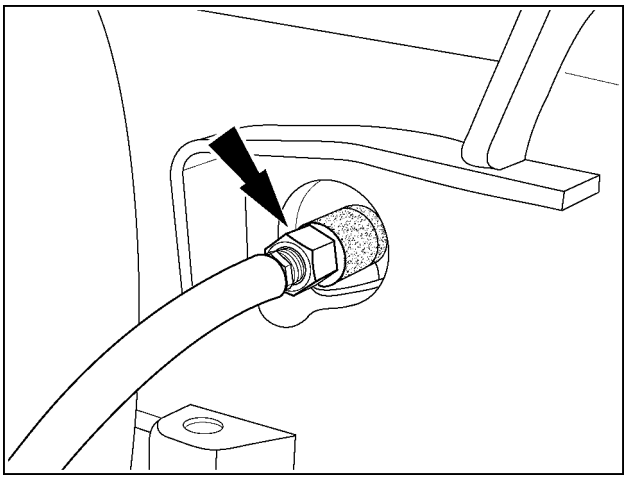

RCPH10FWD137BAC 3

PREVIEW - YOUFIXTHIS.COM

Download full manual at youfixthis.com

Refrigerant identifier – OEM4450

This tool is used to measure the purity of R134A refrigerant.

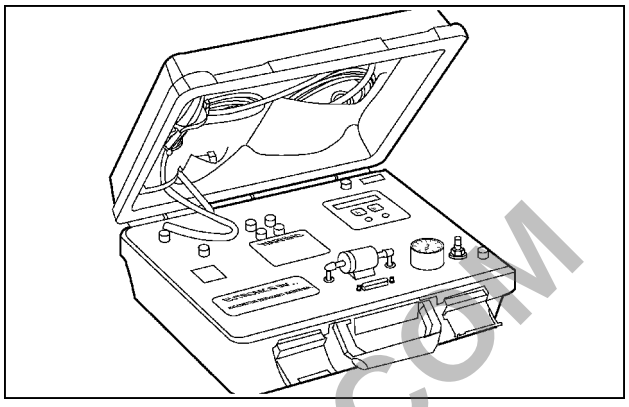

4

Electronic leak detector – OEM1437

This tool detects leaking refrigerant for air conditioning troubleshooting and repair.

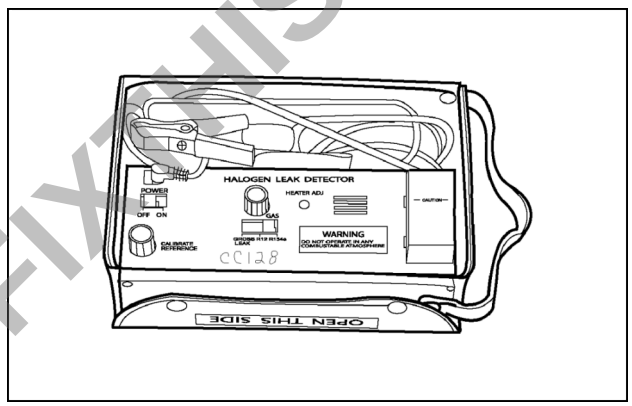

5

UV leak detection lamp and goggles – BSL750

This tool detects leaking refrigerant by fluorescing a dye added to the refrigerant.

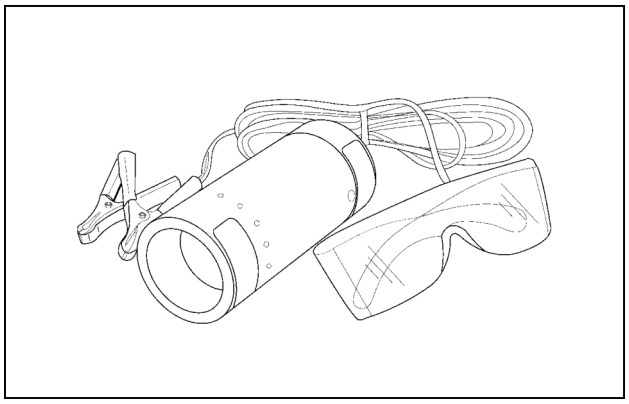

RCPH07SPT105AAA 6

PREVIEW - YOUFIXTHIS.COM

Download full manual at youfixthis.com

STARTING AND CHARGING SYSTEM

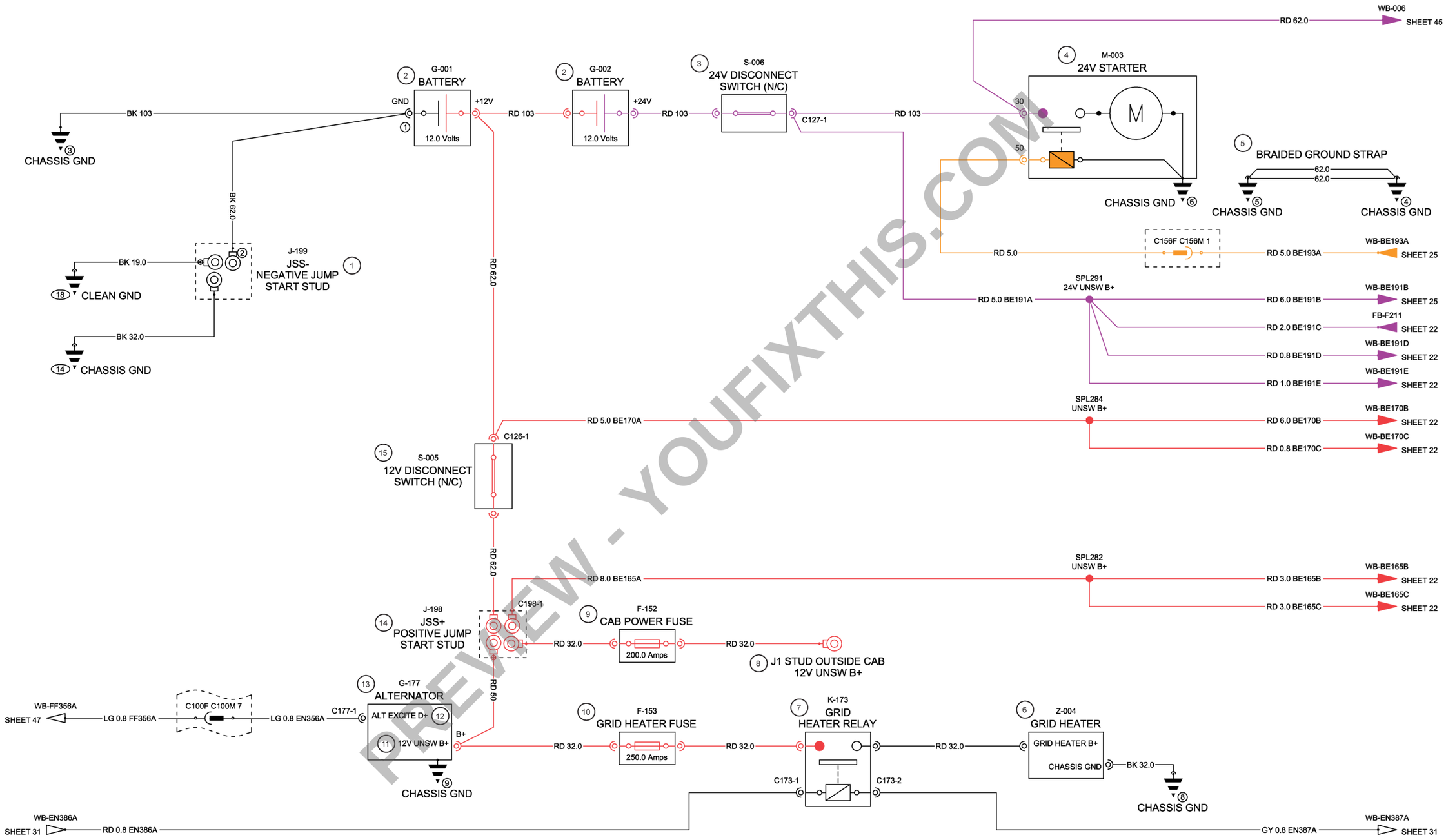

PREVIEW - YOUFIXTHIS.COM

SHEET 24

RAIL13TR02880JA 1

Download full manual at youfixthis.com

Battery - Remove – High power frame units

Quadtrac 470	WE
Quadtrac 540 Europe model [ZEF300001 -]	WE
Quadtrac 540 Europe scraper model [ZEF300001 -]	WE
Quadtrac 580 Europe model [ZEF300001 -]	WE
Quadtrac 580 Europe scraper model [ZEF300001 -]	WE
Quadtrac 620 Europe model [ZEF300001 -]	WE
Steiger 500 Europe heavy duty wheeled [ZEF300001 -]	WE
Steiger 500 Europe wheeled scraper [ZEF300001 -]	WE
Steiger 500 QT Europe model [ZEF300001 -]	WE
Steiger 500 QT Europe scraper model [ZEF300001 -]	WE
Steiger 540 Europe heavy duty wheeled [ZEF300001 -]	WE
Steiger 540 Europe wheeled scraper [ZEF300001 -]	WE
Steiger 580 Europe heavy duty wheeled [ZEF300001 -]	WE
Steiger 580 Europe wheeled scraper [ZEF300001 -]	WE
Steiger 620 Europe heavy duty wheeled [ZEF300001 -]	WE
Steiger 620 Europe wheeled scraper [ZEF300001 -]	WE

1. Open the right hand access door.

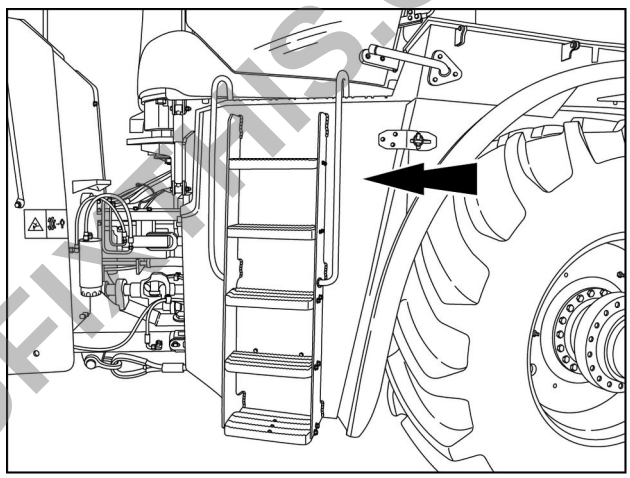

RAIL13TR02459AA 1

2. Turn off the power.

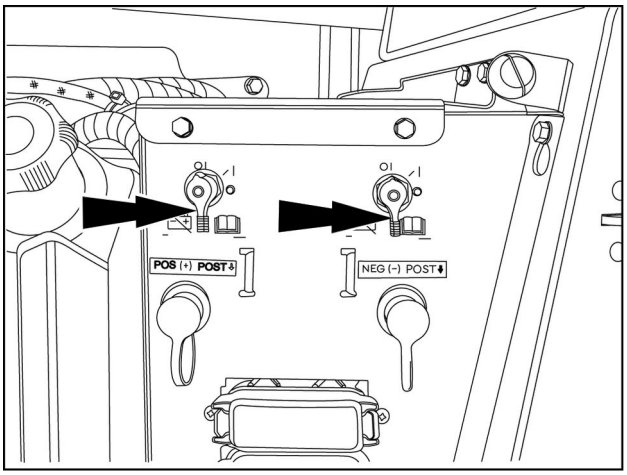

RAIL13TR02475AA 2

PREVIEW - YOUFIXTHIS.COM

Download full manual at youfixthis.com

1002-Raise hitch valve coil short to 12 volts or raise hitch valve coil circuit failure

Cause:

Possible failure modes:

1. Faulty connector
2. Faulty EDC valve raise solenoid
3. Faulty harness
4. Faulty tractor control unit (TCU)

Solution:

1. Check the EDC valve raise solenoid connector C209 and the tractor control unit (TCU) connectors C060 and C061.
   A. Ensure the connectors are connected, not damaged, the pins are in the correct position and that the fit is tight. Repair or replace as required.
   B. If the connectors are okay, continue to step **2**
2. Check the EDC valve raise solenoid.
   A. Disconnect the EDC valve raise solenoid connector C209. Measure the resistance between the solenoid terminals. If the resistance indicated is not approximately **2 Ohms**, remove and replace the EDC valve raise solenoid.
   B. If the solenoid is okay, continue to step **3**
3. Check for a short to 12 volt source.
   A. Turn the ignition switch ON. Measure the voltage between harness end connector C209 pin 1 and ground. If a voltage is indicated, repair or replace the harness as required.
   B. If a voltage is not indicated, continue to step **4**
4. Check for a short to 12 volt source.
   A. Turn the ignition switch ON. Measure the voltage between connector C209 pin 2 and ground. If a voltage is indicated, repair or replace the harness as required.
   B. If the harness is okay, download the correct level of software. If the fault reoccurs, submit a concern to ASIST.

Wire harnesses - Electrical schematic frame 77 (55.100.DP-C.20.E.77)

PREVIEW - YOUFIXTHIS.COM

Download full manual at youfixthis.com

Side panels - Install - High power frame units

Quadtrac 470	WE
Quadtrac 540 Europe model [ZEF300001 -]	WE
Quadtrac 540 Europe scraper model [ZEF300001 -]	WE
Quadtrac 580 Europe model [ZEF300001 -]	WE
Quadtrac 580 Europe scraper model [ZEF300001 -]	WE
Quadtrac 620	WE
Steiger 500 Europe heavy duty wheeled [ZEF300001 -]	WE
Steiger 500 Europe wheeled scraper [ZEF300001 -]	WE
Steiger 500 QT Europe model [ZEF300001 -]	WE
Steiger 500 QT Europe scraper model [ZEF300001 -]	WE
Steiger 540 Europe heavy duty wheeled [ZEF300001 -]	WE
Steiger 540 Europe wheeled scraper [ZEF300001 -]	WE
Steiger 580 Europe heavy duty wheeled [ZEF300001 -]	WE
Steiger 580 Europe wheeled scraper [ZEF300001 -]	WE
Steiger 620 Europe heavy duty wheeled [ZEF300001 -]	WE
Steiger 620 Europe wheeled scraper [ZEF300001 -]	WE

1. Set the shield in position and secure with the bolts removed during disassembly.

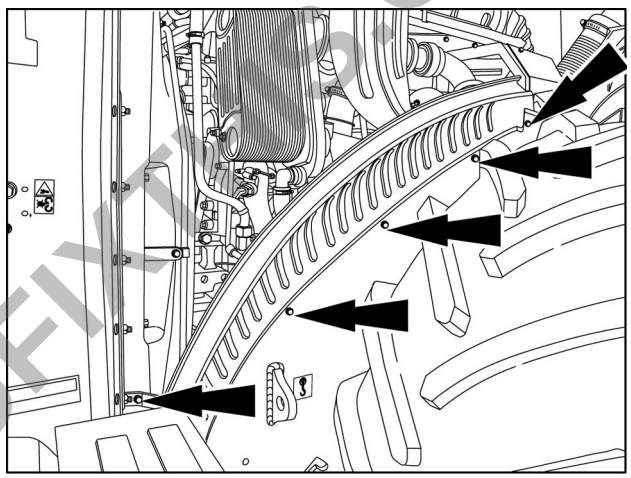

RAIL14TR00236AA 1

2. Close the hood and check for proper alignment.

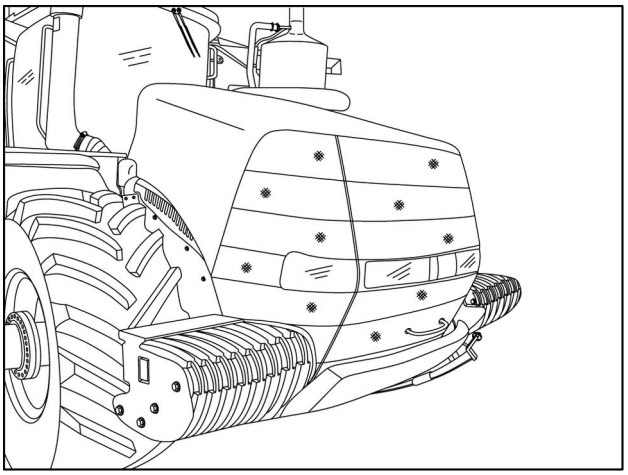

RAIL14TR00231AA 2

PREVIEW - YOUFIXTHIS.COM

Download full manual at youfixthis.com

Contents

INTRODUCTION

Engine 10

[10.001] Engine and crankcase 10.1

[10.216] Fuel tanks 10.2

[10.202] Air cleaners and lines 10.3

[10.310] Aftercooler 10.4

[10.400] Engine cooling system 10.5

[10.414] Fan and drive 10.6

[10.500] Selective Catalytic Reduction (SCR) exhaust treatment 10.7

Transmission 21

[21.113] Powershift transmission 21.1

[21.135] Powershift transmission external controls 21.2

[21.145] Gearbox internal components 21.3

[21.155] Powershift transmission internal components 21.4

Front axle system 25

[25.100] Powered front axle 25.1

[25.102] Front bevel gear set and differential 25.2

[25.310] Final drives 25.3

Rear axle system 27

[27.100] Powered rear axle 27.1

[27.106] Rear bevel gear set and differential 27.2

[27.120] Planetary and final drives 27.3

Power Take-Off (PTO) 31

[31.104] Rear electro-hydraulic control 31.1

[31.110] One-speed rear Power Take-Off (PTO) 31.2

[31.220] Gearbox 31.3

PREVIEW - YOUFIXTHIS.COM

Download full manual at youfixthis.com

8. Use a torque wrench on the center bolt to check rolling torque. Tighten the nut until **19 - 20 N·m** (**170 - 180 lb in**) of smooth and continuous rolling torque is measured on the torque wrench.

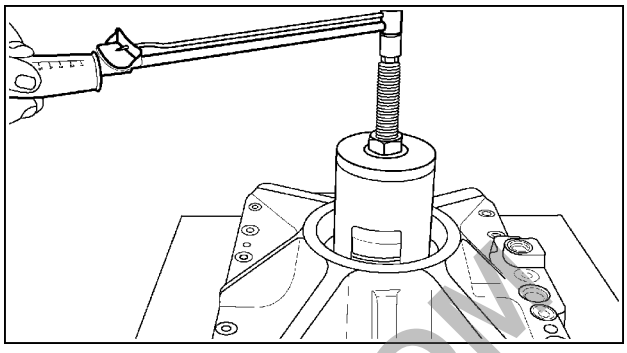

RCPH10FWD378ABJ 8

9. Use an angled thickness gauge to measure and record the distance between the spacer washer and the upper edge of the snap ring groove. The thickness gauge must be a tight fit.

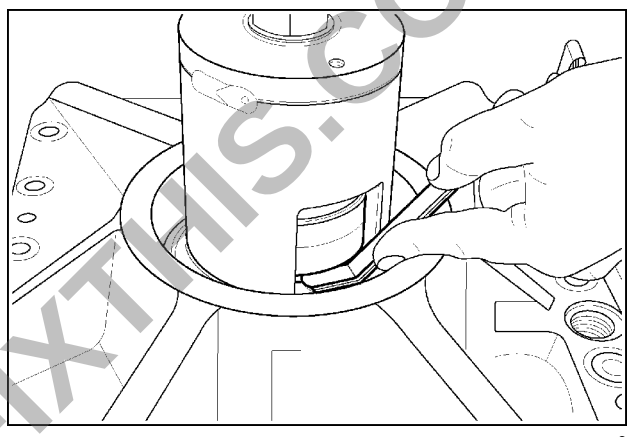

RCPH10FWD438ABJ 9

10. Measure the width of the snap ring. Subtract this dimension from the total distance measured and recorded in Step **9**.

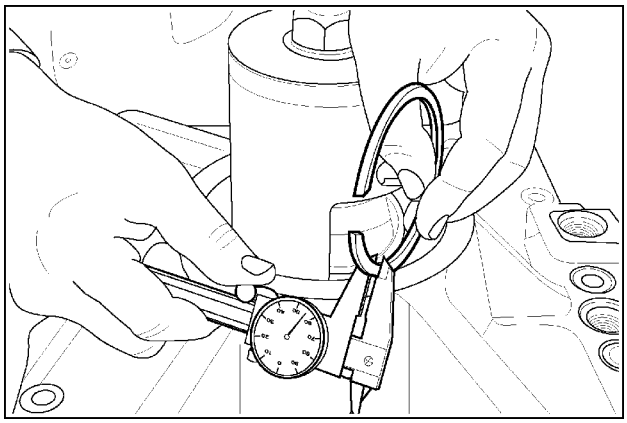

RCPH10FWD379ABJ 10

11. Select a bearing preload shim pack equal to the difference calculated in Step **10** plus an additional **0.076 mm** (**0.003 in**). Remove the compression sleeve from the center bolt and the thick spacer washer from the pinion shaft.

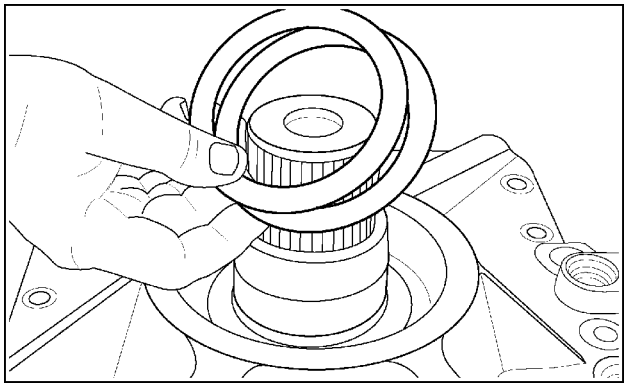

RCPH10FWD439ABJ 11

PREVIEW - YOUFIXTHIS.COM

Download full manual at youfixthis.com

Connector X-9023 - Crankcase pressure sensor

CONNECTOR X-9023 - Crankcase pressure sensor			
PIN NUMBER	**WIRE NUMBER**	**CIRCUIT REFERENCE**	**ELECTRICAL SCHEMATIC FRAME**
1	EN-043	Supply	**Wire harnesses - Electrical schematic frame 05 - Engine inputs/outputs (55.100)**
2	EN-044	Ground	
3	EN-045	Signal	

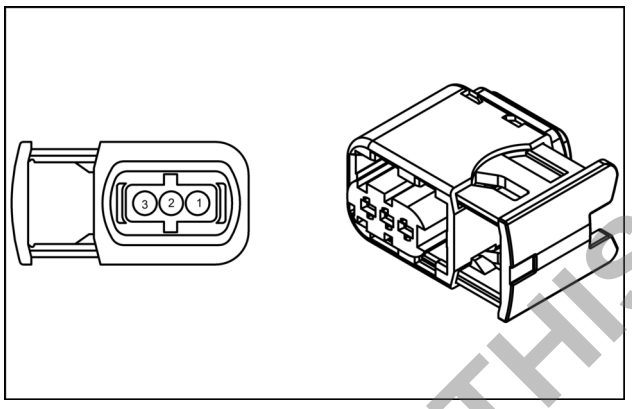

84146685 4

PREVIEW - YOUFIXTHIS.COM

Download full manual at youfixthis.com

PREVIEW ONLY

You're viewing 25 of 5233 pages

The full manual includes:

- All 5233 pages, complete
- Searchable PDF (find any keyword)
- No watermarks
- Instant download
- Print-ready quality

GET FULL MANUAL NOW

Case IH Steiger 370, Steiger 420, Steiger 470, Steiger 500, Steiger 540, Steiger 580, Steiger 620, Quadtrac 470, Quadtrac 500, Quadtrac 540, Quadtrac 580, Quadtrac 620 Service Manual

Scan or click anywhere
youfixthis.com

Click anywhere on this page to get the full manual