TABLE OF CONTENTS

SAFETY 3

GENERAL INFORMATION
- Cleaning 5
- Inspection 5
- Bearing 5
- Needle Bearings 5
- Gears 5
- Oil Seals, O-Rings And Gaskets 5
- Shafts 5
- Service Parts 5
- Lubrication 5

STANDARD TORQUE DATA FOR NUTS AND BOLTS
- Chart 1 (Plain Nuts/Bolts) 6
- Chart 2 (Phosphate Coated Nuts/Bolts) 6
- Chart 3 (Zinc or Cadmium Plated Nuts/Bolts) 7

PREVIEW - YOUFIXTHIS.COM

Download full manual at youfixthis.com

Fuel Shut Off Solenoid Circuit Test

IMPORTANT: *Before carrying out the following tests, refer to "CIRCUIT TESTING General Information" on page 5.*

NOTE: *For tractors not equipped with fuel shut off relays, refer to the Schematic on Page 37. For tractors equipped with fuel shut off relays, refer to the Schematic on Page 39.*

NOTE: *Turn the key to the OFF position and check fuse 38.*

NOTE: *Disconnect the fuel shut off solenoid from the harness.*

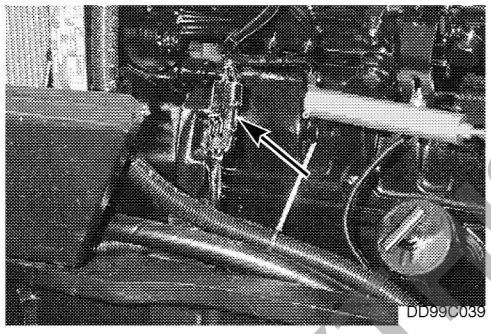

FUEL SHUT OFF SOLENOID CONNECTOR

Check Point	Reading	Possible Cause of Bad Reading
Test 1: Terminal C of the fuel shut off solenoid connector (engine harness side) for wire 604 Brown to ground.	Continuity	Check the wire 604 and the chassis ground connection.
Check 2: Between the terminals A and C of the fuel shut off solenoid connector (solenoid side).	11 Ohms approximately at 20˚C (68˚F)	Bad fuel shut off solenoid.
Check 3: Between the terminals B and C of the fuel shut off solenoid connector (solenoid side).	0.3 Ohms approximately at 20˚C (68˚F)	Bad fuel shut off solenoid.

NOTE: *For tractors NOT Equipped with fuel shut off relays, disconnect wire 604 from the starter solenoid. DO NOT allow wire 604 to short to ground.*

NOTE: *Hold the key in the START position.*

Check 4: For tractors not equipped with fuel shut off relays. Terminal B of the fuel shut off solenoid connector (engine harness side) for wire 604 White to ground.	12 Volts	Bad circuit between the starter relay terminal 87 and the fuel shut off solenoid. Also check the starter relay, refer to "Starter Relay Circuit Test" on page 28.

NOTE: *If the reading at check 4 is correct go to check 6.*

continued....

PREVIEW - YOUFIXTHIS.COM

Download full manual at youfixthis.com

SCHEMATIC CIRCUIT
(European Tractors from Cab Serial Number JKJ205775)
(North American Tractors from PIN JJA90116)

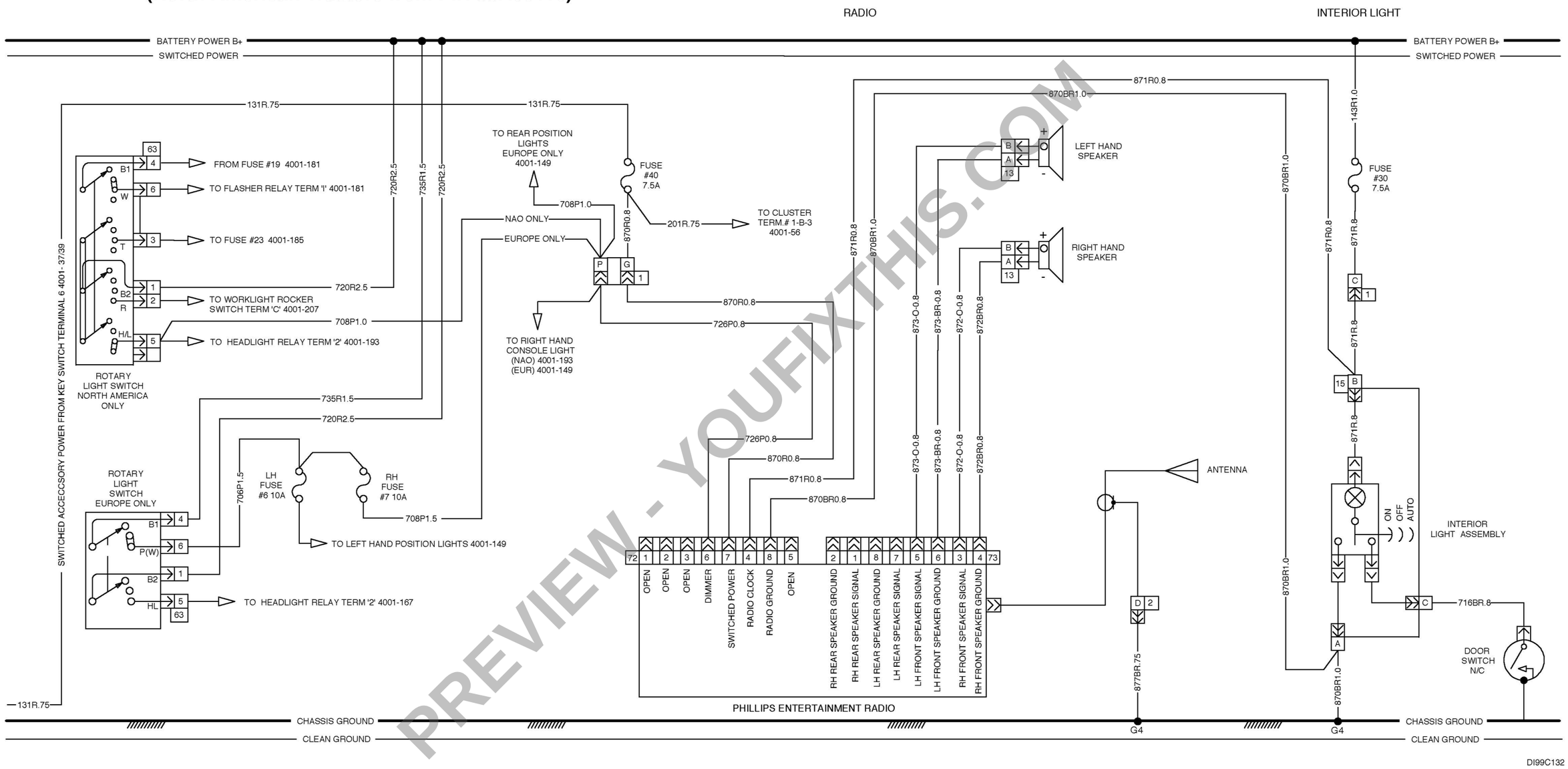

PREVIEW - YOUFIXTHIS.COM

SCHEMATIC CIRCUIT
(For European Platform Tractors)

EUROPEAN PLATFORM POSITION LIGHTS AND NUMBER PLATE LIGHT

EUROPEAN PLATFORM TURN SIGNAL LIGHTS

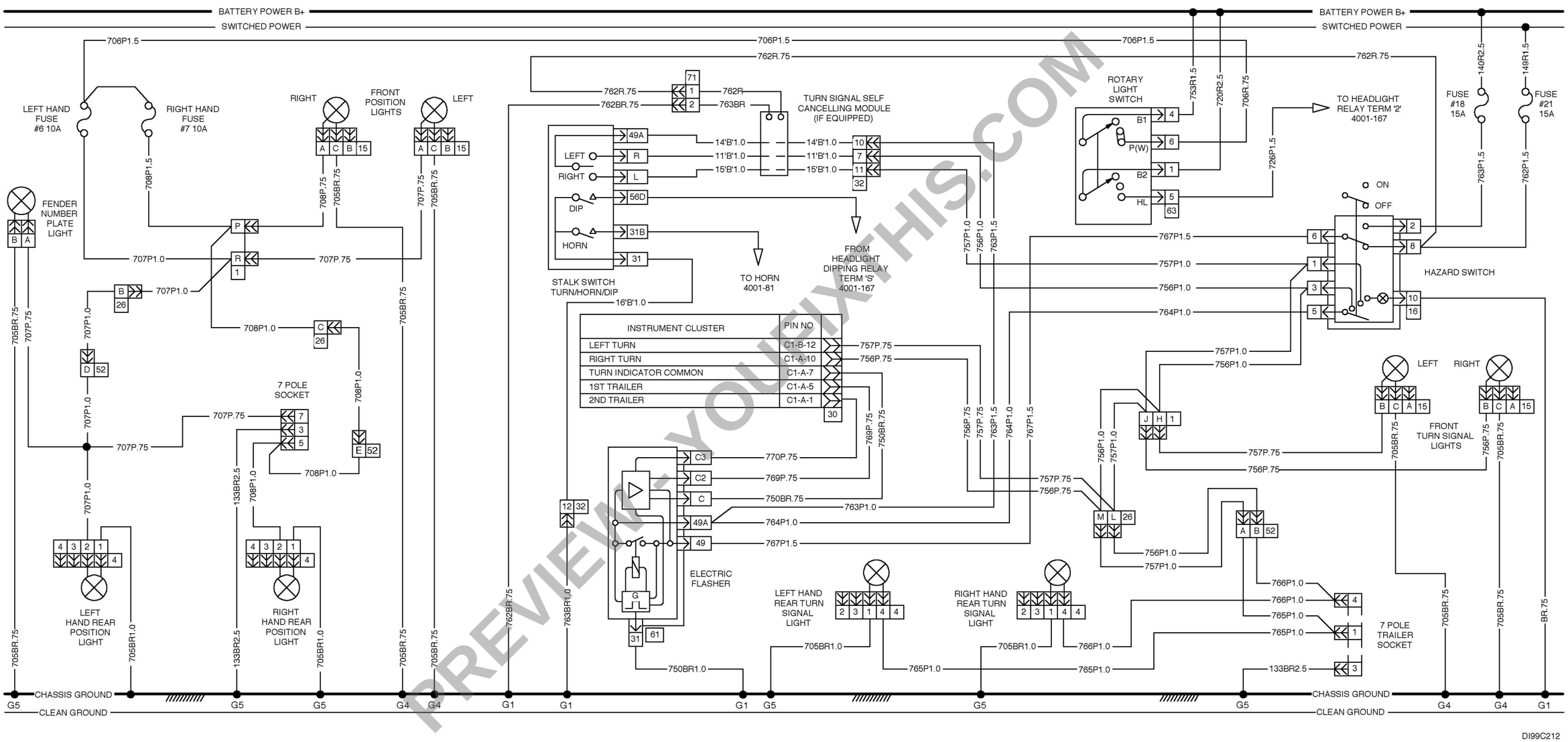

DI99C212

PREVIEW - YOUFIXTHIS.COM

Download full manual at youfixthis.com

Connector 26

Location: Right Hand Console

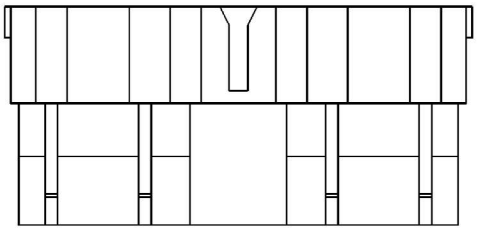

478I96

INSTRUMENT PANEL TO RIGHT HAND CONSOLE HARNESS

Cavity	Wire No	Circuit
A	542 LB	MFD INDICATOR LIGHT
B	707 P	LH TAIL/POSITION LIGHT
C	708 P	RH TAIL/POSITION LIGHT
D	500 R	HITCH B+
E	590 R	PTO CONTROLLER B+
F	735 LB	DIFF LOCK INDICATOR LIGHT
G	784 V	REAR FENDER WORK LIGHTS
H	810 R	SEAT B+
J	530R	MFD AND DIFF LOCK B+
K	134 R	AUXILIARY POWER CONNECTOR SWITCHED B+
L	757 P	RH TURN SIGNAL
M	756 P	LH TURN SIGNAL
N	530 R	BRAKE RELAY (POWER)
P	133 R	AUXILIARY POWER FENDER HARNESS CONNECTOR (EUR) 7 PIN CONNECTOR (NAO)
R	135 R	RH CONSOLE AUXILIARY POWER UNSWITCHED B+
S	817 R	CIGAR LIGHTER
T	269 Y	PARK BRAKE WARNING LIGHT
U	702 R	BRAKE RELAY B+
V	530/531 R	RH BRAKE PEDAL SWITCH
W	785 V	REAR FOG LIGHTS (EUR)
X	275 Y	STEERING PRESSURE SWITCH
Y	276 Y	1000 RPM PTO SWITCH
Z	509 LB	HITCH DOWN SWITCH

Connector 27

Location: Right Hand Console

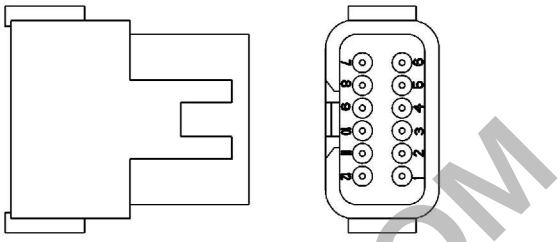

480I96

INSTRUMENT PANEL TO RIGHT HAND CONSOLE HARNESS

Cavity	Wire No	Circuit
1	240 Y	AIR TRAILER BRAKE PRESSURE SWITCH
2	515 R	LOADER CONTROLS B+
3	507 T	SWITCH TO NEUTRAL LAMP
4	- - - - - OR 267 Y	OPEN OR HYDRAULIC FILTER TEMPERATURE SWITCH
5	267 Y	HYDRAULIC FILTER RESTRICTION PRESSURE SWITCH
6	233 Y	FUEL LEVEL SENDER
7	215 Y	WHEEL SPEED SENSOR
8	224 LB/ 224 Y	INSTRUMENT CLUSTER PTO SPEED SENSOR
9	536 LB	LH BRAKE SIGNAL
10	SEE BELOW	
11	216 Y	ENGINE RPM (PTO)
12	550 R	POWERSHIFT RELAY B+

EUROPEAN TRACTORS UP TO PIN JJE956905 AND NORTH AMERICAN TRACTORS UP TO PIN JJA96840

Cavity	Wire No	Circuit
10	700 P	BRAKE LIGHTS B+

EUROPEAN TRACTORS FROM PIN JJE956906 AND NORTH AMERICAN TRACTORS FROM PIN JJA96841

Cavity	Wire No	Circuit
10	- - - - - OR 570 T	OPEN OR POWERSHIFT SPEED INDICATOR

PREVIEW - YOUFIXTHIS.COM

Download full manual at youfixthis.com

STEERING CONTROL VALVE

DIAGRAM 1

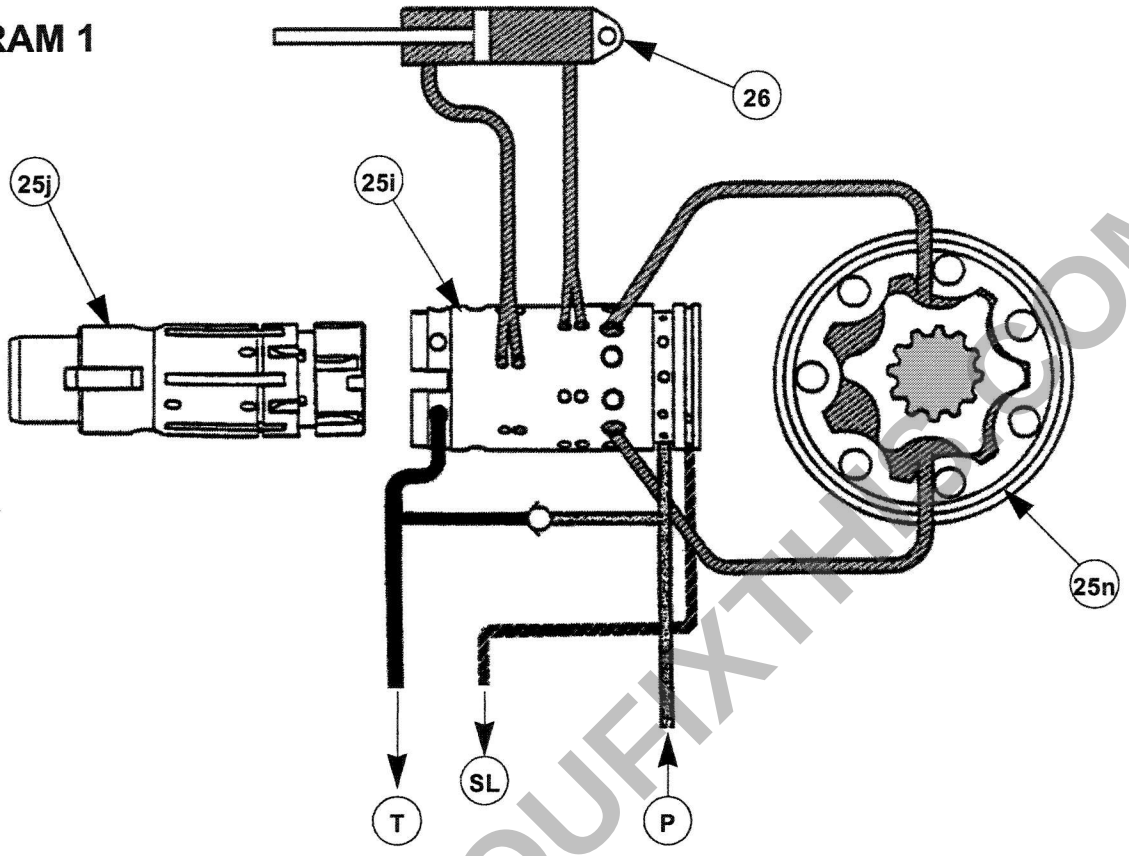

DIAGRAM 2

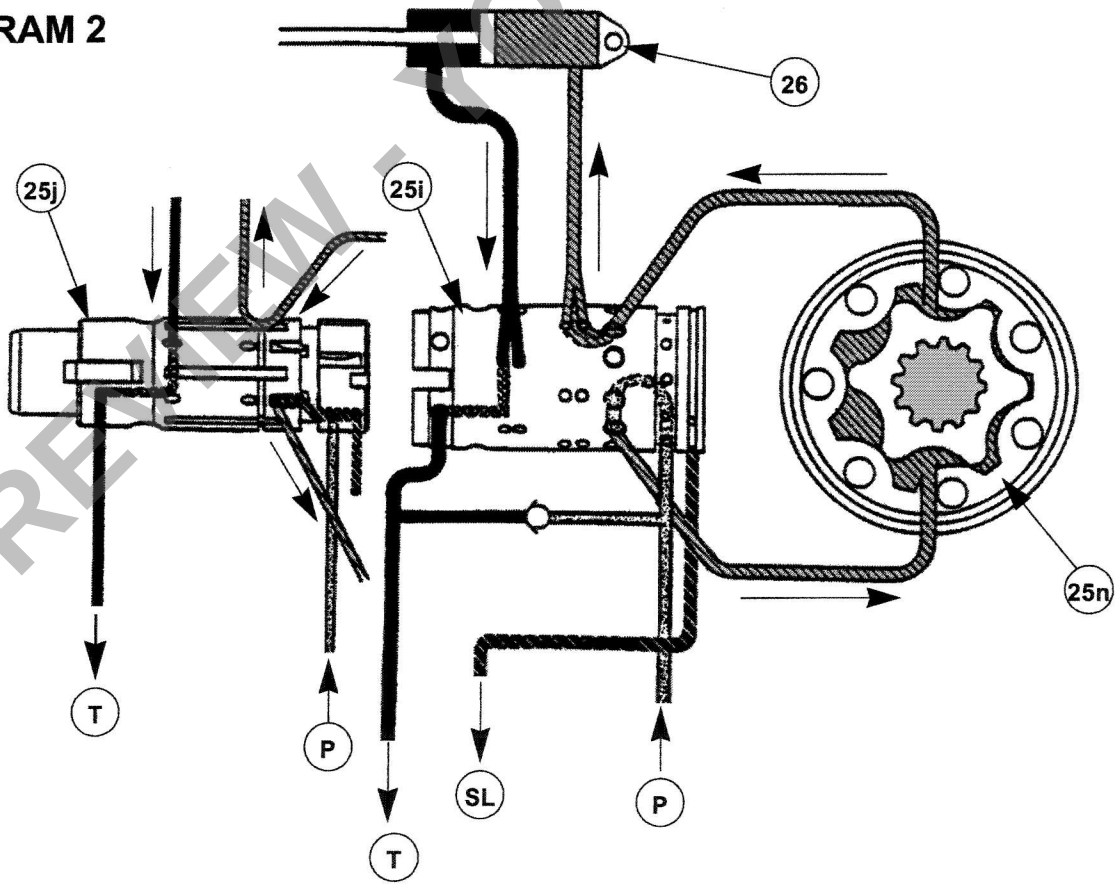

PREVIEW - YOUFIXTHIS.COM

Download full manual at youfixthis.com

40 KM/H STEERING HAND PUMP
(European Tractors Only)

Disassembly

STEP 1

Secure the steering hand pump in a clean soft jaw vice, DO NOT overtighten the vice. Remove the fittings, remove and discard the o-rings. Make a note of the position of the sensing hose fitting.

STEP 2

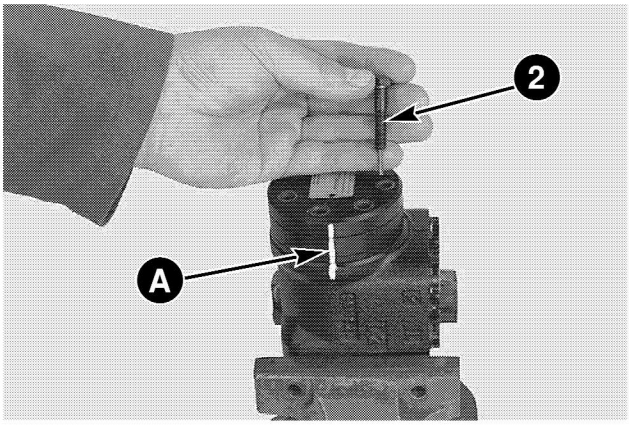

DD00F064

Put alignment marks (A) on pump body (30), valve plate (8), stator (5) and end cover (3). Remove retaining bolts (1), make a note of the position and remove special bolts (2). Remove the end cover (3), spacer (4), stator (5), rotor (6), drive shaft (7) and valve plate (8). Remove and discard o-rings (9), (10) and (11).

STEP 3

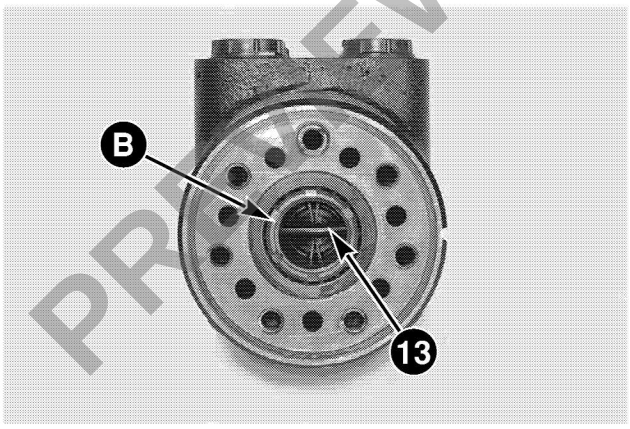

DD00F065

Turn spool and sleeve assembly (B) until pin (13) is parallel to the fitting mounting face. Remove spool and sleeve assembly (B) and thrust bearing assembly (12) from pump body (30).

STEP 4

Remove pin (13) from the spool and sleeve assembly (B). Remove the spool (14) from sleeve (15), remove centering springs (16) and (17) from spool (14).

STEP 5

Remove and discard seal (18) and dust seal (19).

STEP 6

Remove threaded bushing (20), ball (21), threaded bushing (22) and ball (23).

IMPORTANT: *DO NOT use a magnet to remove balls (21) and (23).*

NOTE: *Ball (23) has a smaller diameter than ball (21).*

STEP 7

Mark the position and remove valve pins (24) and balls (25). Remove shock valve assemblies (26).

IMPORTANT: *DO NOT use a magnet to remove balls (25).*

STEP 8

Remove cut off valve (27) and check valve (28).

IMPORTANT: *DO NOT remove check valve (29) from pump body (30).*

PREVIEW - YOUFIXTHIS.COM

Download full manual at youfixthis.com

MFD STEERING AND FINAL REDUCTIONS

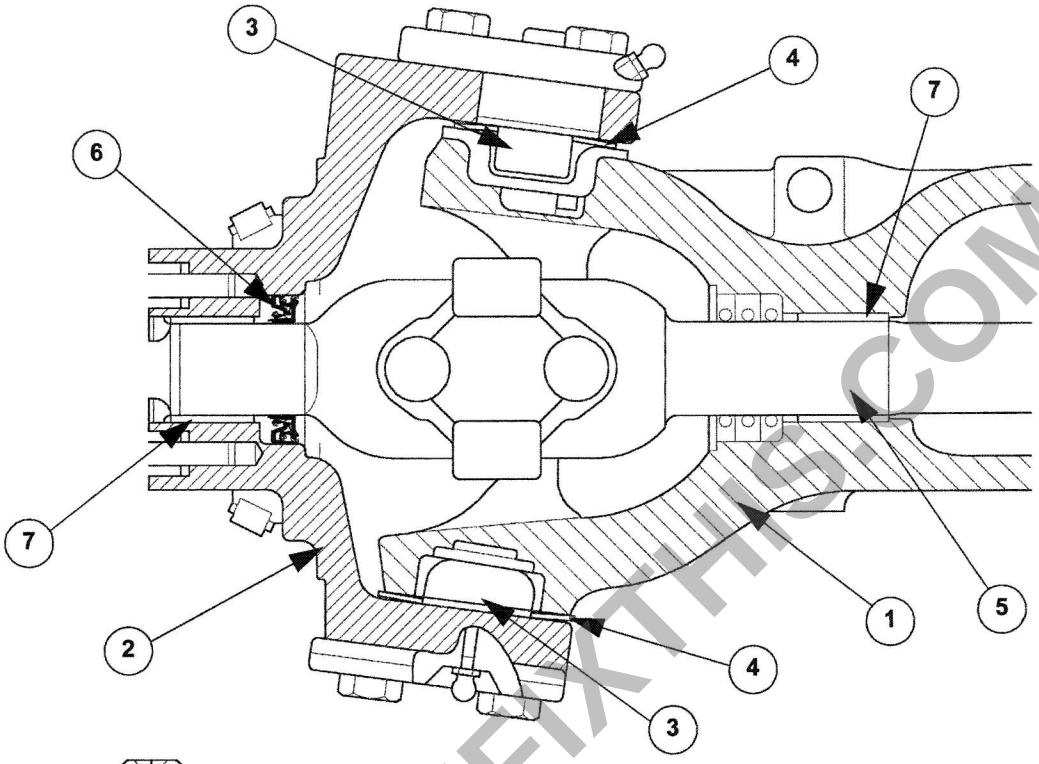

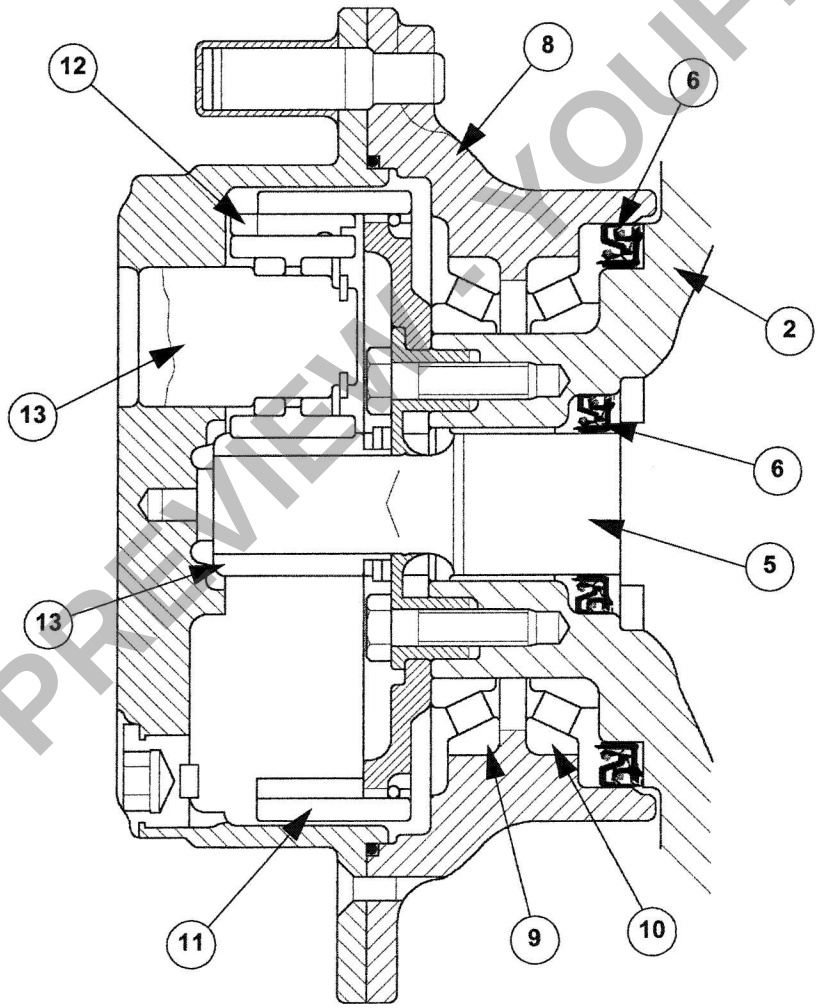

20.19 AXLE

1	Axle Housing
2	Swivel Housing
3	King Pin
4	Belleville Washer
5	Axle Shaft
6	Oil Seal
7	Bushing
8	Wheel Hub
9	Outer Bearing
10	Inner Bearing
11	Reduction Ring Gear
12	Reduction Gears(3)
13	Stub Shafts (3)
14	Reduction Drive Gear

PREVIEW FROM YOUFIXTHIS.COM

Download full manual at youfixthis.com

STEP 21

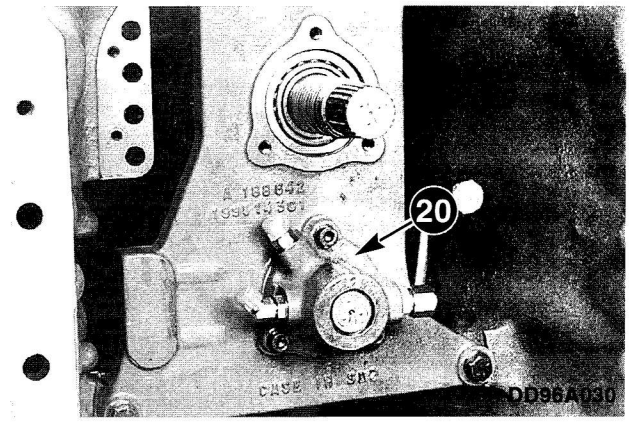

Install the dropshaft oil distributor (20), without shims. Install the retaining bolts and washers. DO NOT tighten the bolts at this stage.

STEP 22

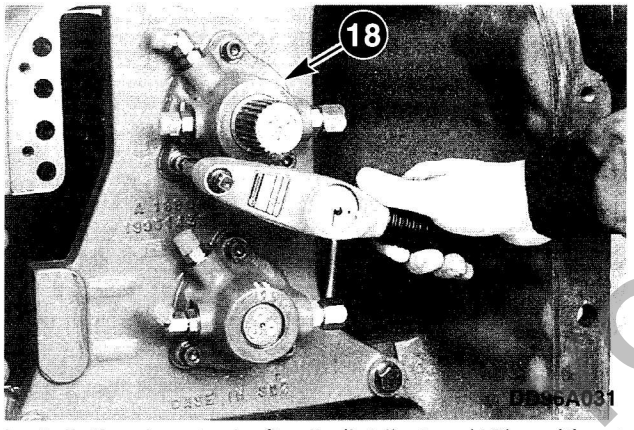

Install the input shaft oil distributor (18), without shims. Install and tighten the retaining bolts to a torque of 9 Nm (80 lb in). Rotate the input shaft and continue to tighten the retaining bolts until the torque remains constant at 9 Nm (80 lb in).

STEP 23

Loosen the input shaft oil distributor retaining bolts, then tighten the retaining bolts to a torque of 2.8 Nm (25 lb in). Rotate the input shaft and continue to tighten the retaining bolts until the torque remains constant at 2.8 Nm (25 lb in).

STEP 24

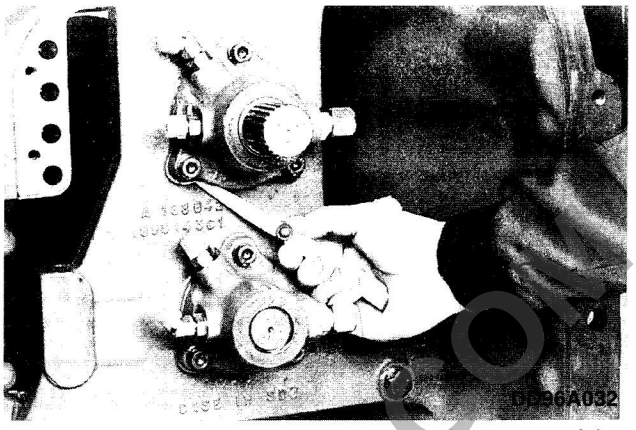

Using feeler gauges measure and make a note of the gap between the input shaft oil distributor and the front bearing carrier next to the three retaining bolts. If the difference between the three measurements is less than 0.05 mm (0.002 inch), use the average of the measurements to calculate the required shim pack, refer to STEP 25.

NOTE: *If the difference between the three measurements is more than 0.05 mm (0.002 inch), remove the oil distributor and check the input shaft bearing and cup for the correct seating.*

STEP 25

Add 0.36 mm (0.014 inch) to the average measurement noted in STEP 24 to determine the correct shim pack thickness (19). Make a note of the required shim pack thickness. Loosen the oil distributor retaining bolts.

STEP 26

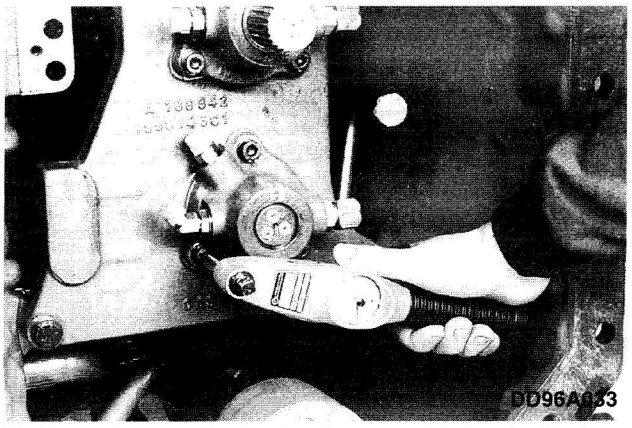

Tighten dropshaft oil distributor retaining bolts to a torque of 9 Nm (80 lb in). Rotate the input shaft and continue to tighten the retaining bolts until the torque remains constant at 9 Nm (80 lb in).

PREVIEW - YOUFIXTHIS.COM

Download full manual at youfixthis.com

STEP 19

Repeat STEP 13 to STEP 15 and measure the end play. The end play must be between 0.18 to 0.4 mm (0.007 to 0.016 inch).

NOTE: *If the piston (10) cannot be rotated in the clutch housing too many shims have been installed.*

STEP 20

Using the spring compressor CAS1992 and hydraulic press, remove the snap ring (5), spring retainer (6), spring (7), lubrication sleeve (8) and shims (9). Remove the piston (10).

NOTE: *Keep each shim pack together, make sure the reverse clutch shim pack and forward clutch shim pack are kept separate.*

STEP 21

Repeat STEP 12 to STEP 20 to determine the forward lubrication shim pack.

NOTE: *The following procedure (STEP 22 to STEP 27) to assemble the clutch packs is the same for the forward and reverse clutches. When assembling the shuttle shaft, assemble the forward clutch pack first.*

STEP 22

Lubricate and install a new o-ring (14) and sealing ring (13) into the inner groove of the piston (10). Lubricate and install a new o-ring (12) and sealing ring (11) into the outer groove of the piston (10).

NOTE: *Make sure the o-rings are installed before the sealing rings.*

STEP 23

Install the piston (10) into the clutch housing. Make sure the grooved side of the piston is facing outward. Carefully push the piston into the housing using even pressure. If the piston locks up during installation, remove the piston and install again. Never use force to correct wrong alignment of the piston.

STEP 24

Install the shims (9), (determined in STEP 16, lubrication sleeve (8), spring (7), spring retainer (6) and snap ring (5) onto the shuttle shaft.

IMPORTANT: *Make sure the shim pack determined in step 16 for the forward clutch pack is installed into the forward clutch and the shim pack determined in STEP 16 for the reverse clutch pack is installed into the reverse clutch.*

STEP 25

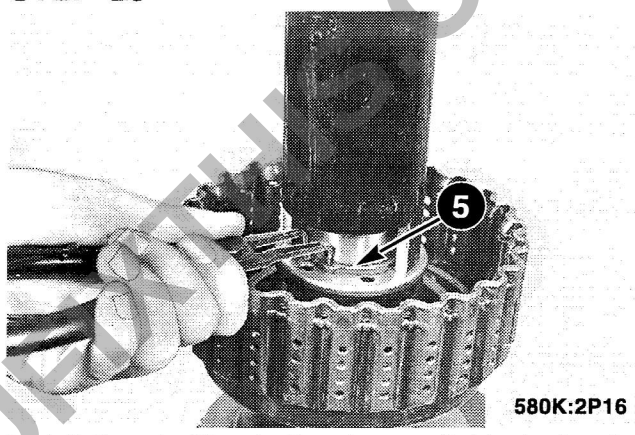

580K:2P16

Install the shuttle shaft onto a suitable hydraulic press. Using the spring compressor CAS1992, compress the spring (7) and install the snap ring (5) into the groove in the shuttle shaft. Make sure the snap ring is located correctly into the groove.

STEP 26

Install a metal separator plate (4) and a friction (3) into the reverse clutch. Continue to install one metal separator plate (4) then one friction plate (3), until six metal separator plates and six friction plates have been installed. The last plate installed must be a friction plate.

IMPORTANT: *If new friction plates are to be installed, make sure all the friction plates have the same friction material groove pattern and the friction plates are soaked in clean transmission oil before installation.*

STEP 27

Install the backing plate (2), make sure the recessed side of the backing plate is facing outward. Install the snap ring (1), make sure the snap ring is located correctly into the groove.

PREVIEW - YOUFIXTHIS.COM

Download full manual at youfixthis.com

STEP 19

Put blocks under the differential assembly. Install the alignment studs and remove the left hand bearing carrier and shims.

STEP 20

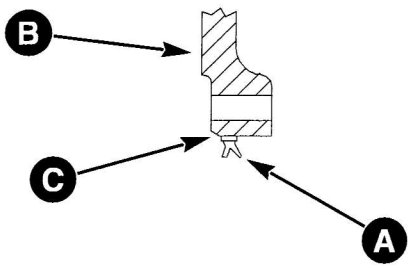

AXLE SIDE DIFFERENTIAL SIDE

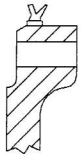

DI95M088

Install the left hand differential seal (A) into the transmission housing (B), make sure the seal is installed level with the bottom of the chamfer (C).

NOTE: *The seal will be installed into the correct position when the bearing carrier and shim pack are installed.*

STEP 21

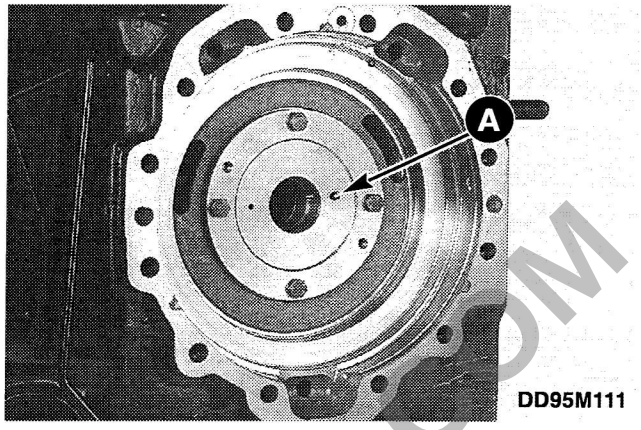

DD95M111

Install the left hand bearing carrier and shim pack removed in STEP 19. Install and tighten the retaining bolts with new washers to a torque of 58 to 65 Nm (42 to 48 lb ft). Make sure the lubrication hole (A) is towards the rear of the transmission.

STEP 22

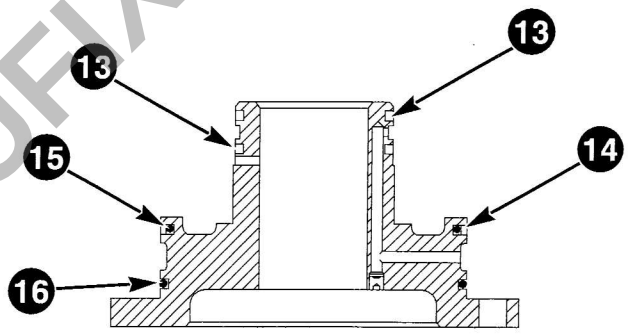

DI95M198

Remove the right hand bearing carrier and shims. Lubricate and install a new outer o-ring (16), new inner o-ring (15), seal ring (14) and differential lock seals (13) on to the right hand bearing carrier.

STEP 23

Install the right hand bearing carrier and shim pack removed in STEP 22. Install and tighten the retaining bolts with new washers to a torque of 58 to 65 Nm (42 to 48 lb ft).

STEP 24

Remove the blocks from the differential. Rotate the differential assembly and check the bolt torques of both bearing carriers.

PREVIEW - YOUFIXTHIS.COM

Download full manual at youfixthis.com

Assembly

NOTE: *Items are numbered in order of Disassembly, Assembly is in the reverse order of Disassembly.*

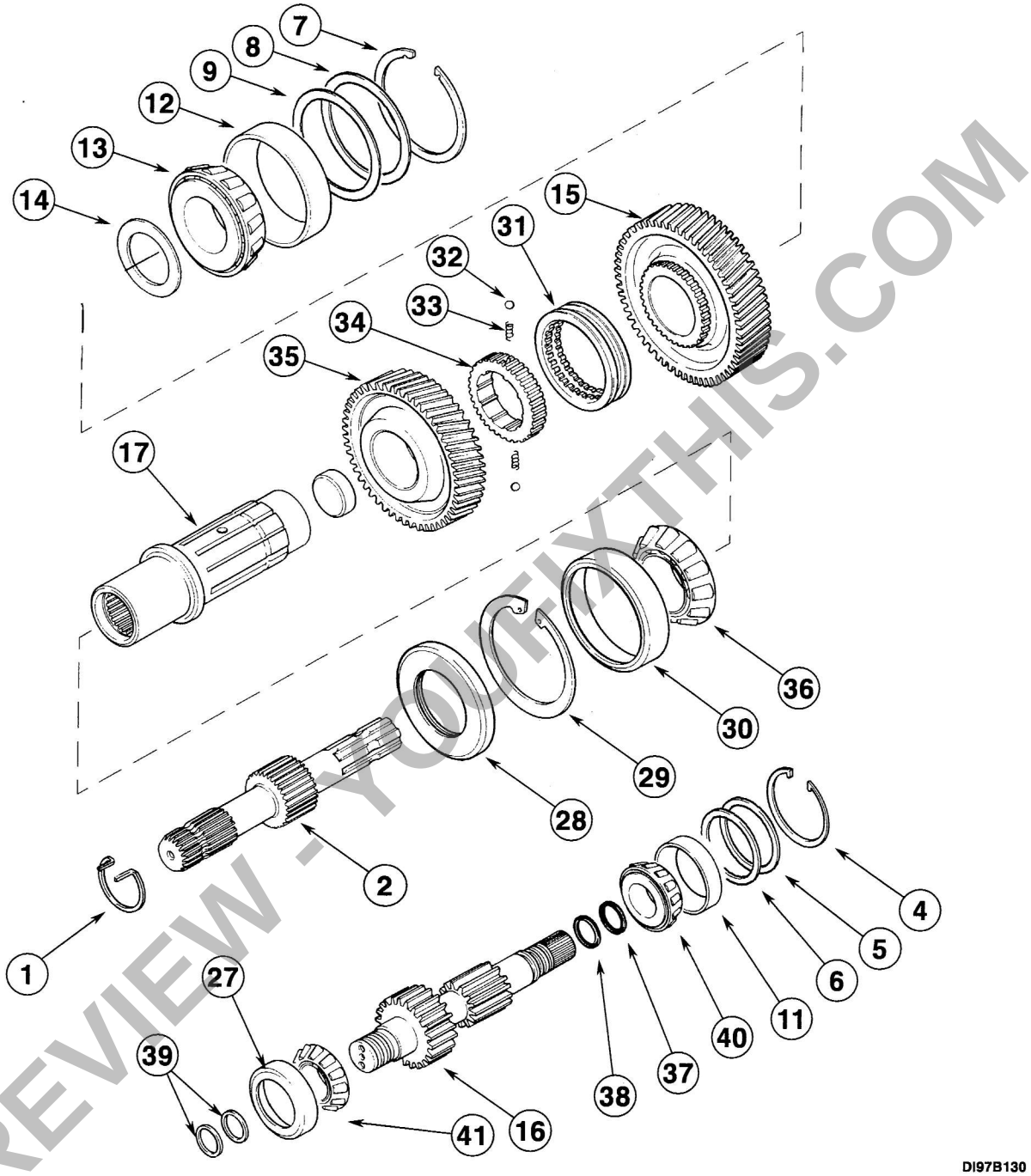

DI97B130

1. RETAINING RING
2. PTO SHAFT
4. SNAP RING
5. WASHER
6. SHIM
7. SNAP RING
8. WASHER
9. SHIM
11. BEARING CUP
12. BEARING CUP
13. BEARING CONE
14. THRUST WASHER
15. GEAR
16. PTO INPUT SHAFT
17. PTO OUTPUT SHAFT
27. BEARING CUP
28. SEAL
29. SNAP RING
30. BEARING CUP
31. SHIFT COLLAR
32. BALL (2)
33. SPRING (2)
34. HUB
35. GEAR
36. BEARING CONE
37. O-RING
38. O-RING
39. SEAL RING
40. BEARING CONE
41. BEARING CONE

NOTE: *Items* (3) (10) (18) (19) (20) (21) (22) (23) (24) (25) (26) *are not shown, refer to Assembly procedure.*

PREVIEW - YOUFIXTHIS.COM
Youfixthis.com
Download full manual at youfixthis.com

Differential Bearing Preload Adjustment

STEP 23

Make sure the ring gear and pinion shaft backlash is correct and the bearing cap bolts are tightened to a torque of 266 Nm (196 lb ft).

STEP 24

With the ring gear and pinion shaft in mesh and the backlash correctly set, check the differential bearing preload as follows:

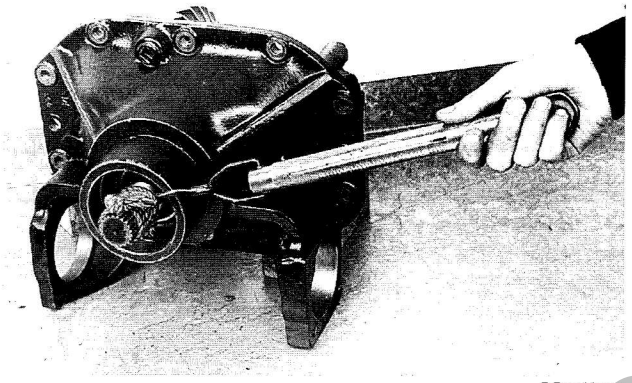

DP96M045

Attach a length of cord to the pinion shaft. Wrap the cord around the pinion shaft without overlapping. Attach a spring balance to the end of the cord and check the pinion shaft rolling pull.

The correct rolling pull for the 20.19 and 20.22 Axles must be 30 to 44 N (6.8 to 7.0 lb/f) above the pinion bearing pre-load measured in STEP 13 on page 38.

The correct rolling pull for the 20.22 High Clearance Axle must be 28 to 42 N (6.3 to 9.5 lb/f) above the pinion bearing pre-load measured in STEP 13 on page 38.

If the rolling pull is more than specification it is necessary to turn both locking rings counterclockwise in equal amounts.
If the rolling pull is less than specification it is necessary to turn both locking rings clockwise by equal amounts.

STEP 25

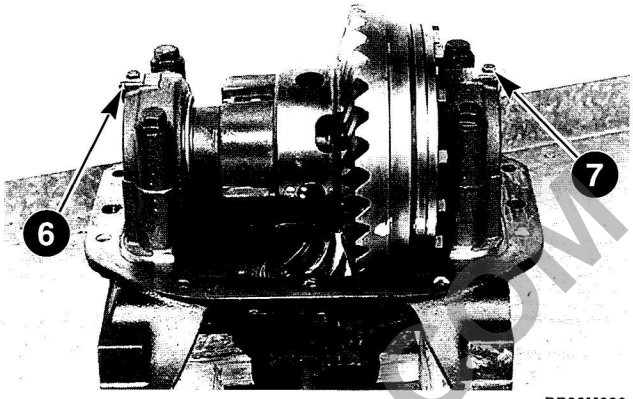

DP96M032

When the preload is correct, install locking plates (6). Install bolts (7) and tighten to a torque of 13 Nm (10 lb ft).

STEP 26

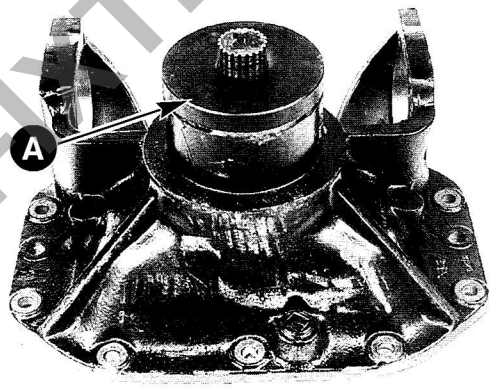

DP96M056

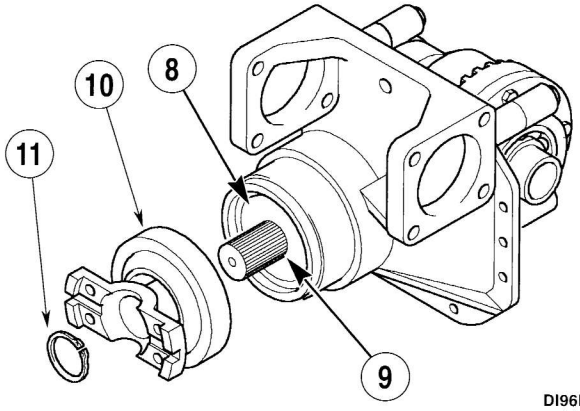

DI96M121

For tractors equipped with 20.19 Axle using seal installer CAS2485 (A) to install seal (8).
For tractors Equipped with 20.22 Axle using seal installer CAS2484 (A) to install seal (8).

Install snap ring (9).

Install input flange (10) and snap ring (11) onto pinion shaft.

PREVIEW - YOUFIXTHIS.COM

Download full manual at youfixthis.com

TABLE OF CONTENTS

SPECIFICATIONS 3

SPECIAL TORQUES 3

PTO DRIVE SHAFT GEAR AND HYDRAULIC PUMP DRIVE GEAR
Removal 4
Installation 6

Cross Sectional Drawing of the PTO Drive Shaft Gear and
Hydraulic Pump Drive Gear 12

PREVIEW - YOUFIXTHIS.COM

Download full manual at youfixthis.com

TRANSMISSION LUBRICATION CIRCUIT AND PFC PUMP SUPPLY

The transmission lubrication circuit is supplied from the charge/lubrication pump (2) and operates at low pressure to lubricate and cool all parts of the transmission. The pressure in the lubrication circuit is influenced by the demand for flow from the PFC axial piston pump. When the PFC pump is operating at high flow rates, it will draw oil away from the lubrication circuit and supply it to the auxiliary circuits and/or the hitch circuit.

NOTE: *Return oil from the remote auxiliary valves returns to the lubrication circuit at the filter mounting plate*

To safeguard transmission lubrication there are two different circuits, one for primary lubrication and cooling and a secondary circuit for the remainder of the transmission. The two circuits are separated by a priority valve (5b) set at 1 bar (14.5 psi) and a 4.25 mm (0.17 inch) orifice (5c).

A check valve (39m) limits the flow to the bevel gear/pinion lubrication until the lubrication pressure reaches 1.72 bar (25 psi)

A lubrication pressure relief valve (7) opens when the lubrication pressure rises to 3.45 bar (50 psi) and allows the excess flow to return to the transmission housing.

The lubrication orifices for all the circuits are designed to allow the oil flows listed below when the engine is running at maximum speed.

Pump Flow Specifications		**litre/min**	**US gal/min**
2	Lubrication/charge pump	136	36
8	PFC axial piston pump	78.5	17.3

Circuit I - Primary

37c	Bevel gear/pinion lubrication	4	1.0
37d	Pinion shaft lubrication	5.3	1.4
37e	Differential lubrication	5.8	1.4
37f	Forward/reverse shuttle control valve		
	(clutch engaged)	27	7.1
	(clutch free)	3.5	0.9
37h	Hitch rock shaft lubrication	1.0	0.3
37g	PTO clutch lubrication	8.0	2.0

Circuit II - Secondary

37b	Main shaft and creeper speed (option) lubrication	4.0	1.0
37n	Synchromesh unit lubrication	10	2.6
37a	Powershift clutch lubrication	14	3.7
30	Oil cooler	25	6.6
37j	Brake lubrication	23	6.0
28	Brake keep fill reservoir	0.4	0.1

Additional Components

1	Main Suction Screen
5a	Filter by-pass valve
6	Main Filter

NOTE: *After re-assembling the transmission, all lubrication orifices must be clean and free of contamination.*

Refer to Section 8001 for the correct testing procedure.

PREVIEW - YOUFIXTHIS.COM
YouFixThis.com
Download full manual at youfixthis.com

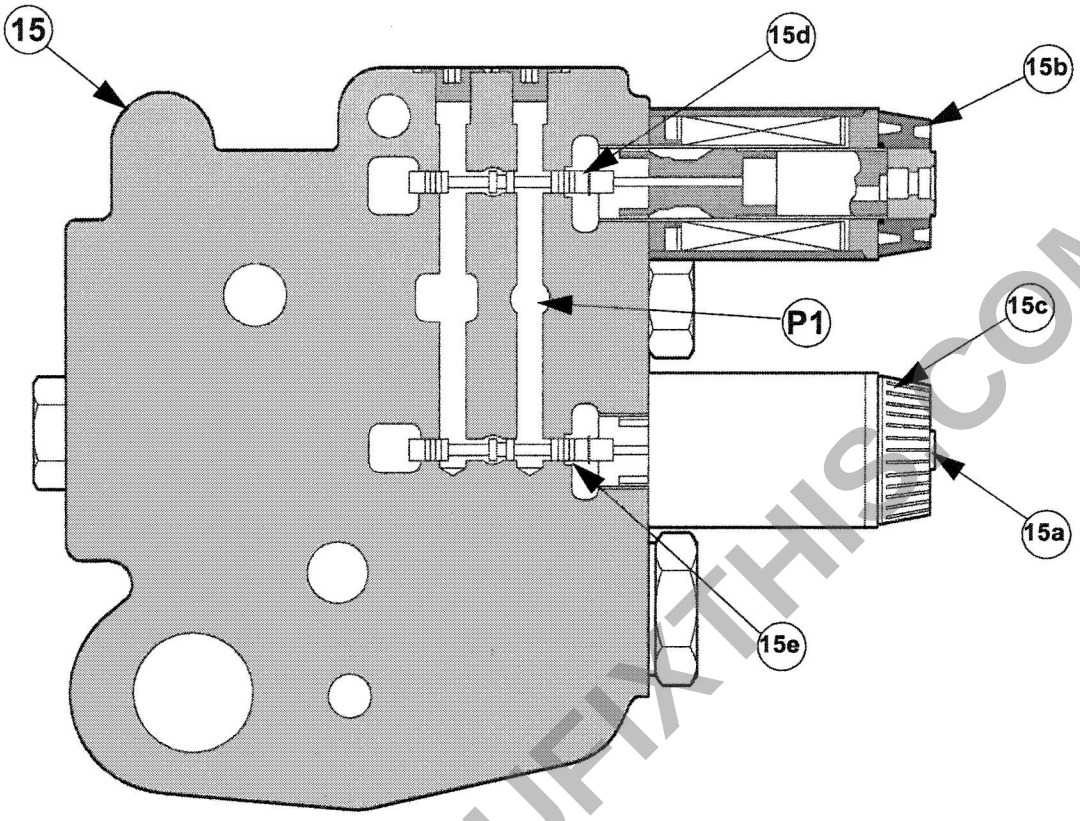

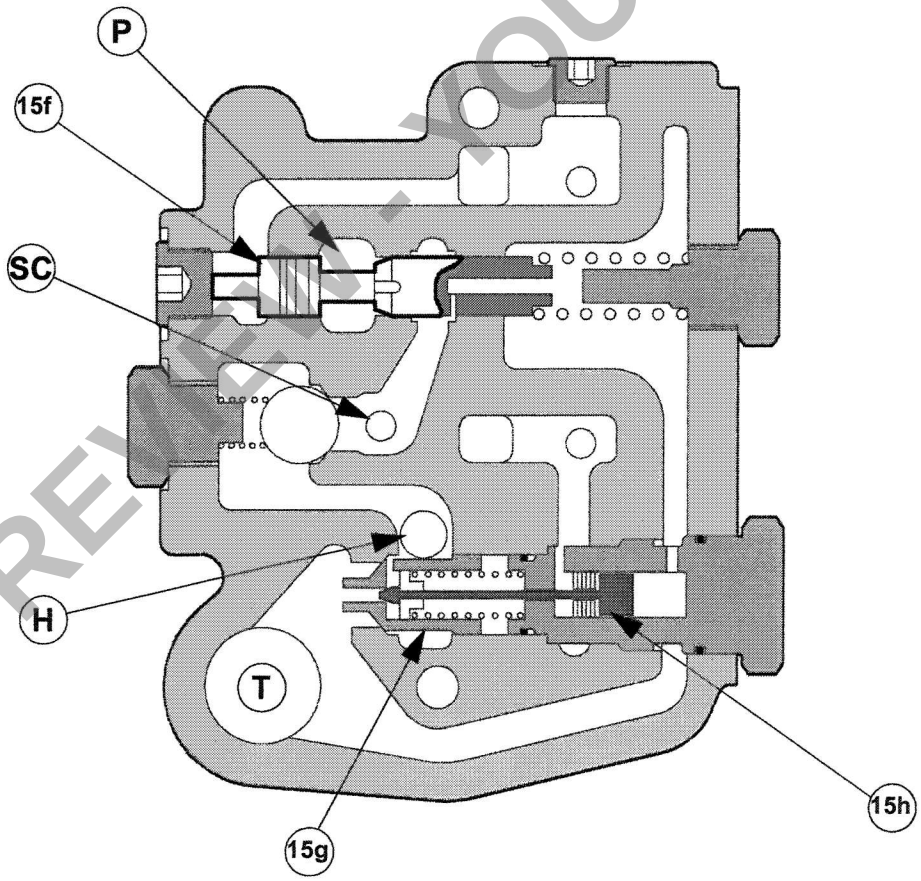

PREVIEW - YOUFIXTHIS.COM

Download full manual at youfixthis.com

Test 12 - PTO Supply Pressure Test

NOTE: *Always check the diagnostic error codes for the PTO/FNR Controller. Refer to Section 10006, PTO/FNR Controller and Powershift.*

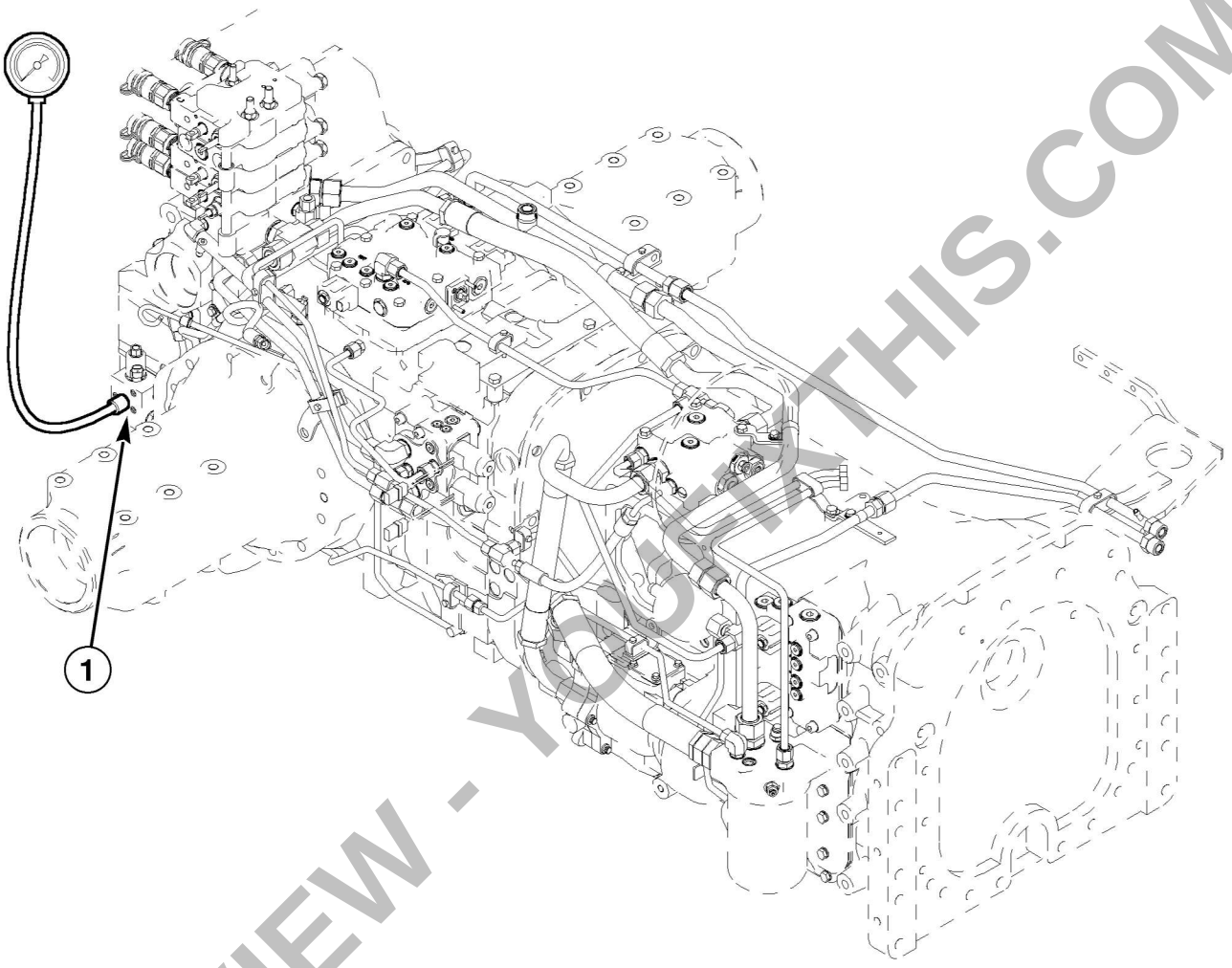

DI99B061

PREVIEW - YOUFIXTHIS.COM

Download full manual at youfixthis.com

REMOTE VALVE WITH 2 CHECK VALVES OR 2 BYPASS PLUGS

Disassembly and Assembly

NOTE: *Items are numbered in order of Disassembly, for Assembly follow the procedure in reverse order.*

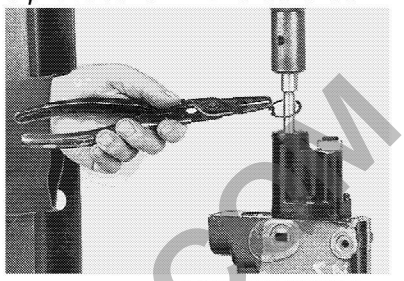

REFER TO NOTE 1
FOR DISASSEMBLY
AND ASSEMBLY

DI98H012

NOTE 1: *Install the remote valve on a hydraulic press, push the retainer (23) down and remove the retaining ring (22) from the detent cover (53).*

NOTE 2: *Item (23) is equipped with an o-ring on later remote valves.*

NOTE 3: *Refer to Page 9 for Disassembly and Assembly of the Check Valves or Bypass Plugs.*

PREVIEW - YOUFIXTHIS.COM

Download full manual at youfixthis.com

(Expansion Valve Not Operating Continued)

15. Inlet end of expansion valve is cold - An indication the valve is not completely open.

A. Disconnect the low pressure switch with the engine running and air conditioner on maximum cooling. Cool the top of the valve with ice and check for low pressure gauge decrease.

NOTE: *Cover the cab roof with airtight material or replace the roof to make sure the flow of air from the blower motor continues through the evaporator core.*

B. Allow the top of the expansion valve to warm. The valve should open and the pressure should rise at the low pressure gauge. Repeat Step A.

C. If little or no decrease is shown in the low pressure gauge reading, the expansion valve must be replaced.

D. Recover the refrigerant from the system, replace the expansion valve, remove the air and moisture and charge the system. See Section 9004.

NOTE: *Be sure to replace the Press Tite insulation material around the expansion valve.*

E. Connect the low pressure cutout switch.

16. Continue the performance test for other possible problems.

PREVIEW - YOUFIXTHIS.COM

Download full manual at youfixthis.com

ROPS

Removal and Installation

NOTE: *Items are numbered in order of Removal. For Installation follow the Removal procedure in reverse order.*

Before removing the ROPS it will be necessary to carry out the following:

- Park the tractor on hard level ground. Lower the rear three point hitch. Stop the engine and remove the key.
- Put blocks in front of and behind the front wheels.
- Raise and support the rear of the tractor on suitable axle stands. For tractors equipped with a flanged axle remove the rear wheels. For tractors equipped with a bar axle move the rear wheels to the maximum tread width position.

  NOTE: *For Installation tighten the rear wheel nuts to the correct torque, refer to "SPECIAL TORQUES" on page 3.*

STEP 1

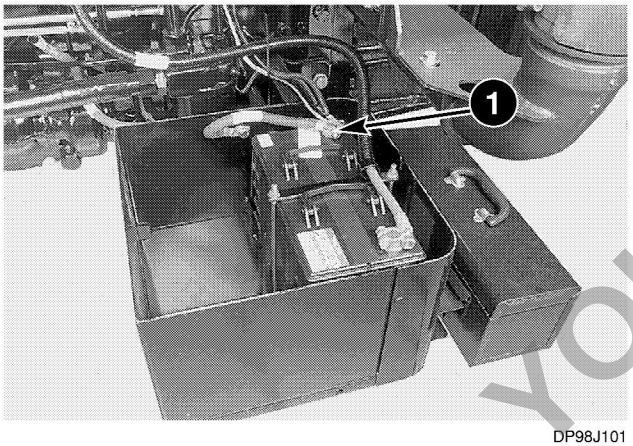

DP98J101

Remove the battery cover. Disconnect the battery, negative (-) terminal first. Disconnect engine harness clean ground wire (1). Remove the battery box front panel and battery retaining clamps. Remove the battery.

NOTE: *For Installation, connect the positive (+) terminal first.*

STEP 2

To safely install the cab support stands CAS10281 directly under the cab frame it will be necessary to remove the fuel tank, refer to Fuel Tank Removal Section 3005.

STEP 3

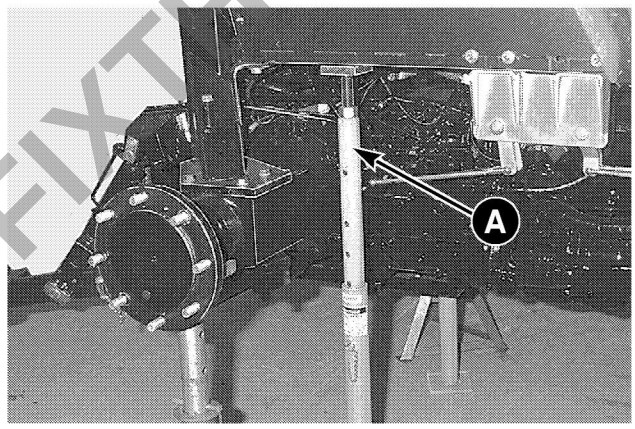

DD98J018

Position cab support stands (A) CAS10281 under the platform frame (both sides) as shown.

STEP 4

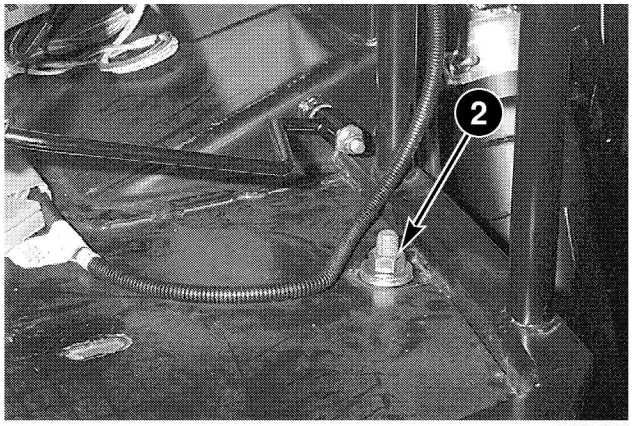

DD98J021

Loosen front platform mounting nuts (2) (both sides).

NOTE: *For Installation, tighten the front platform mounting nuts to a torque of 190 to 244 Nm (140 to 180 lb ft).*

PREVIEW - YOUFIXTHIS.COM

Download full manual at youfixthis.com

NOTE: *If not already carried out, remove the right hand console side cover and remove the cover from splice 3. Disconnect connector J1 (Black) from the hitch controller.*

Check Point	Reading	Possible Cause of Bad Reading
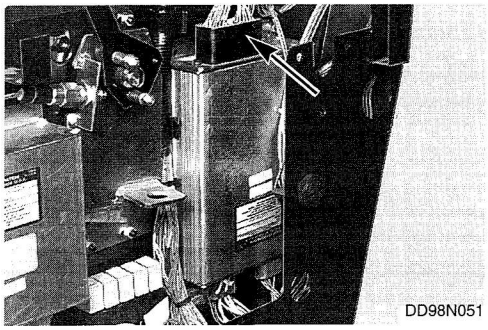 DD98N051		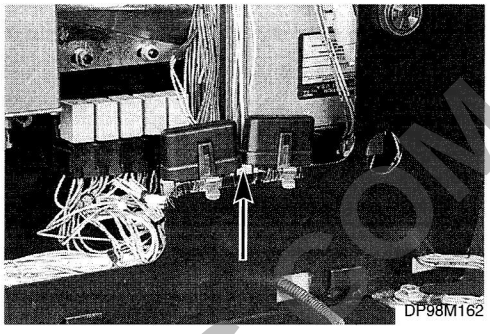 DP98M162
CONNECTOR J1 (BLACK)		**SPLICE 3**
Check 5: Between bridge bar of splice 3 and connector J1 (Black) pin 26 for wire 215 Yellow.	Continuity	Check wire 215 Yellow between splice 3 and connector J1.

NOTE: *If the readings are correct check the hitch load control circuit, carry out the following:*
"Test 12 - Load Pins" on page 42.
"Test 13 - Hitch Load Command Potentiometer" on page 45.
"Test 14 - Hitch Travel Potentiometer" on page 47.

NOTE: *Check the operation of the hitch controller if the fault remains replace the hitch controller. Calibrate the hitch to the new hitch controller, refer to "DELUXE HITCH CALIBRATION" on page 5 or "POSITION ONLY HITCH CALIBRATION" on page 8.*

PREVIEW - YOUFIXTHIS.COM

Download full manual at youfixthis.com

GENERAL INFORMATION FOR HITCH ERROR CODES

Normal Operation

The diagnostic display shows error codes which assist in troubleshooting the Electronic Hitch Control System. When the key switch is placed in the ON position the diagnostic display will self test showing **8** for 2 seconds. If **-** appears on the diagnostic display the hitch position is above the upper limit setting, carry out the following:

1. Press and hold the hitch up/down switch in the DOWN MOMENTARY position to lower the hitch until the upper limit is reached or,
2. Adjust the upper limit control (7) until the hitch position is matched.

The diagnostic display code for System Normal is **0** or **0.** There will be a dot**.** on the lower right hand side of the **0** if the tractor is stationary or travelling at less then 0.5 mph (0.8 km/h). There will be no dot**.** for speeds of more than 0.5 mph (0.8 km/h). If no dot**.** appears below 0.5 mph (0.8 km/h) check the wheel speed sensor, refer to Test 15 - Wheel Speed Sensor on page 51.

No Error Codes Displayed But Hitch Is Not Working Correctly

1. Potentiometer retaining nut loose. Check Hitch Position, Position Command, Load Control, Upper Limit Control, Travel Control and Drop Speed Control potentiometers. Repeat calibration.
2. Hitch will not fully raise or fully lower. Potentiometer retaining nut loose. Check Hitch Position, Position Command and Upper Limit Control potentiometers. Repeat calibration.
3. Hitch does not lower or drop rate is too slow for the application. Adjust Drop Speed Control (9).
4. Hitch will not raise or lower. Possible contamination of hydraulic oil causing hitch valve spool to stick. Attempt re-calibration before further investigation.

Controller LED

If the diagnostic display is blank and the hitch enable lamp does not illuminate when the key switch is in the ON position, check the green LED positioned between the two 12 pin connectors on the controller. Position an item of reflective material between the 12 pin connectors on the controller and observe the reflection from the green LED.

1. If the green LED is OFF there is no power to the controller or the LED is bad, refer to Test 1 - No Power to Controller (Power and Clean Ground) on page 22.
2. If the green LED is ON (NOT FLASHING) the controller needs programming or replacing.
3. If the green LED is ON (FLASHING) the controller has power and is programmed, if a fault exists refer to the hitch system performance code chart.

If the diagnostic display is blank, the hitch enable lamp is illuminated and the hitch operates normally, the diagnostic display may be defective. Test the diagnostic display by disconnecting the tractor diagnostic display from the control module and connecting a good secondary diagnostic display. If the diagnostic display still does not work disconnect secondary diagnostic display and then replace the control module. Connect the original tractor diagnostic display to the control module.

Failure Modes

1. HALT - Hitch is totally disabled and no electronic actuation is possible. The diagnostic display will flash **H** and an error code. The hitch enable lamp will be illuminated.
2. LIMP - Hitch can only be actuated by repeated operation of the hitch up/down switch or the hitch remote switch. The hitch will operate for 1.5 seconds. The tractor must be stationary. The hitch enable lamp will be illuminated and an error code will be displayed.
3. DEGRADED 2 - Due to a failure, the draft control (if equipped) is not operational. The hitch enable lamp will be illuminated and an error code will be displayed.
4. DEGRADED 1 - The hitch enable lamp is illuminated, hitch is operational and an error code will be displayed. Default hitch settings have replaced the operators hitch settings due to component failure.

NOTE: *Most DEGRADED 1 settings are intermittent and will clear. If errors continue corrective action must be taken.*

PREVIEW - YOUFIXTHIS.COM

Download full manual at youfixthis.com

Right Hand Console Harness Components (Without Ride Control)

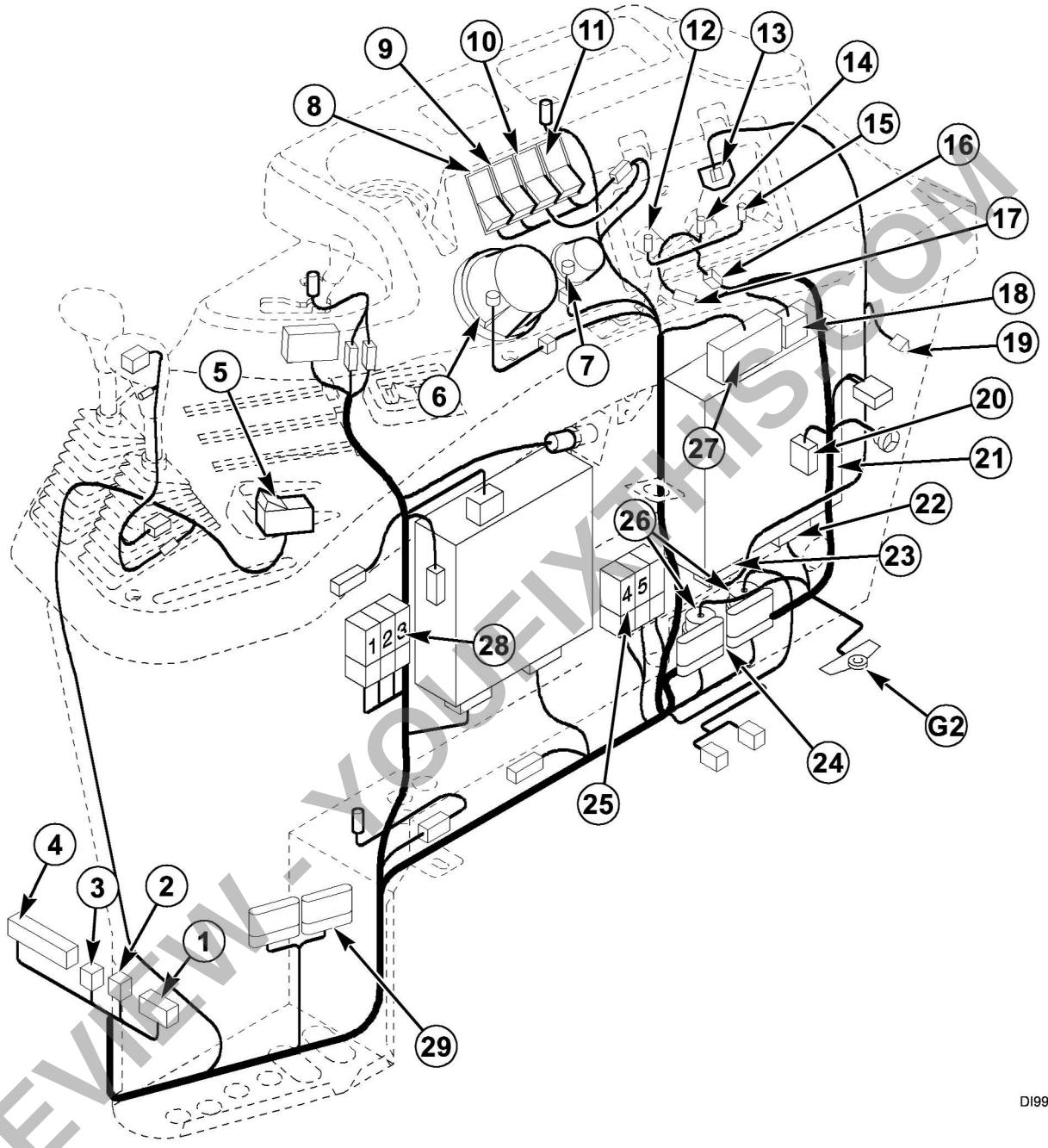

1. CONNECTOR #28 (TO INSTRUMENT PANEL)
2. CONNECTOR #27 (TO INSTRUMENT PANEL)
3. CONNECTOR #29 (TO INSTRUMENT PANEL)
4. CONNECTOR #26 (TO INSTRUMENT PANEL)
5. HITCH UP/DOWN SWITCH
6. POSITION COMMAND POTENTIOMETER
7. LOAD COMMAND POTENTIOMETER
8. DIFFERENTIAL LOCK SWITCH
9. MFD SWITCH
10. FRONT PTO SWITCH (IF EQUIPPED)
11. SLIP CONTROL SWITCH
12. HITCH DROP SPEED POTENTIOMETER
13. HITCH DIAGNOSTIC DIGITAL DISPLAY
14. HITCH TRAVEL POTENTIOMETER
15. HITCH UPPER HEIGHT CONTROL POTENTIOMETER
16. CONNECTOR 59A
17. CONNECTOR 59B
18. CONNECTOR J4 (GREY)
19. PROGRAMMING CONNECTOR
20. AFS CONNECTOR
21. HITCH CONTROLLER
22. CONNECTOR J2 (GREEN)
23. CONNECTOR J3 (BROWN)
24. SPLICE PACK 3
25. RELAYS 4 AND 5 (BRAKES)
26. CONNECTOR #40 (TO TRANSMISSION HARNESS)
    CONNECTOR #52 (TO FENDER HARNESS)
27. CONNECTOR J1 (BLACK)
28. RELAY 3 (MFD)
29. SPLICE PACK 9 (IF EQUIPPED)

G2. CHASSIS GROUND CONNECTION G2

PREVIEW - YOUFIXTHIS.COM

YouFixThis.com
Download full manual at youfixthis.com

This Page Has Been Left Blank

PREVIEW - YOUFIXTHIS.COM

Download full manual at youfixthis.com

Auto and Remote PTO Circuit Test

Test 12 - Auto PTO Indicator Lamp

NOTE: *Before carrying out the following tests, refer to Circuit Testing "General Information" on page 42.*

NOTE: *Check the Auto PTO indicator lamp bulb.*

NOTE: *Refer to "Schematic Circuit For Tractors With Auto and Remote PTO Without Independent Front Suspension Axle" on page 98 and "Schematic Circuit For Tractors With Auto and Remote PTO With Independent Front Suspension Axle" on page 99.*

NOTE: *Turn the key to the OFF position. Remove the right hand console side cover and disconnect the Auto PTO indicator lamp from the right hand console harness.*

NOTE: *Turn the key to the ON position.*

Check Point	Reading	Possible Cause of Bad Reading
Check 1: Tractors without Independent Front Suspension Axle Auto PTO indicator lamp connector for wire 590 Light Blue to ground.	12 volts	Check wire 590 Light Blue between the Auto PTO indicator lamp and the Auto PTO switch connector terminal 5. Also check the Auto PTO switch circuit.
Check 2: Tractors with Independent Front Suspension Axle Auto PTO indicator lamp connector for Light Blue wire to ground.	12 volts	Check Light Blue wire between the Auto PTO indicator lamp and the Ride Control Switch. Also check the Ride Control Switch, refer to section 10002.

NOTE: *Turn the key to the OFF position and disconnect connector J2 (Green) from the PTO controller.*

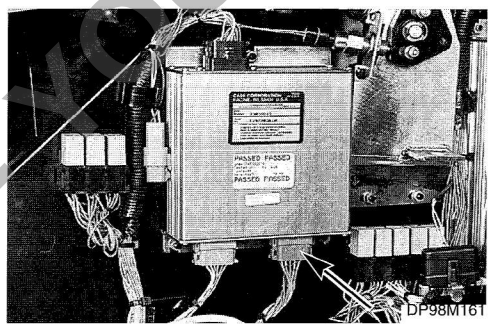

CONNECTOR J2 (GREEN)

Check 3: Between connector J2 (Green) pin 7 and Auto PTO indicator lamp connector for wire 595 Light Blue.	Continuity	Check wire 595 Light Blue.
Check 4: Connector J2 (Green) pin 7 for wire 595 Light Blue to ground.	No continuity	Wire shorted to ground. Check wire 595 Light Blue for damage.

NOTE: *If the readings are correct, replace the Auto PTO indicator lamp unit.*

PREVIEW - YOUFIXTHIS.COM

Download full manual at youfixthis.com

PREVIEW ONLY

You're viewing 25 of 1606 pages

The full manual includes:

- All 1606 pages, complete
- Searchable PDF (find any keyword)
- No watermarks
- Instant download
- Print-ready quality

GET FULL MANUAL NOW

Case MX100, MX110, MX120, MX135 Service Manual



Scan or click anywhere
youfixthis.com

Click anywhere on this page to get the full manual