⚠ CAUTION!

Observe the following safety precautions:

1. **Use extra caution and adequate safety shielding when welding near fuel and oil tanks, batteries, hydraulic piping lines or other fire hazards.**
2. **Never weld when the engine is running. Battery cables must be disconnected before the welding procedure is started.**
3. **Never weld on a wet or damp surface. The presence of moisture causes hydrogen embrittlement and structural weakening of the weld.**
4. **If welding procedures are being performed near cylinder rods, operator's cab window areas or any other assemblies that could be damaged by weld spatters, use adequate shielding protection in front of the assembly.**
5. **During equipment setup, always attach ground cables directly to the area or component being welded to prevent arcing through bearings, bushings, or spacers.**
6. **Always use correct welding rods for the type of weld being performed and observe recommended precautions and time constraints. AWS Class E7018 welding rods for low alloy to medium carbon steel must be used within two hours after removal from a freshly opened container. Class E11018G welding rods for T-1 and other higher strength steel must be used within 1/2 hour.**

HYDRAULIC SYSTEM - GENERAL PRECAUTIONS

Always maintain oil level in the system at recommended levels. Assemblies that operate under heavy loads, at high speed, with extremely precise dimensional tolerances between moving parts - pistons and cylinders, or shoes and swash plates, for example - can be severely damaged if oil supply runs dry.

Assemblies can be run dry and damaged severely in a very short time when piping or hoses are disconnected to repair leaks and/or replace damaged components. Hoses that are inadvertently switched during disassembly (inlet for outlet and vice versa), air introduced into the system or assemblies that are low on oil due to neglect or careless maintenance, could all produce sufficient fluid loss to cause damage.

When starting the engine (particularly after long layoff or storage intervals), make sure that all hydraulic controls and operating circuits are in neutral, or "OFF." That will prevent pumps or other components that may be temporarily oil-starved from being run under a load.

Replacement of any hydraulic system component could require thorough cleaning, flushing, and some amount of pre-filling with fresh, clean oil if the protective seal on replacement parts has obviously been broken or if seal integrity may have been compromised. When protective seals are removed prior to installation and reassembly, inspect all replacement parts carefully, before they are installed. If the replacement part is bone dry (with no trace of factory pre-lube) or has been contaminated by dirt or by questionable oils, flushing and pre-filling with clean hydraulic fluid is recommended.

Vibration, irregular or difficult movement or unusual noise from any part of the hydraulic system could be an indication of air in the system (as well as many other types of problems). As a general precaution (and to help minimize the risk of potential long-term damage), allow the engine to run at no-load idle speed immediately after initial start-up. Hydraulic fluid will circulate, releasing any air that may have been trapped in the system before load demands are imposed.

A daily walk-around pre-start equipment safety inspection, including a quick visual scan for any exterior evidence of leaking hydraulic fluid, can help extend the service life of system components.

PREVIEW - YOUFIXTHIS.COM
Download full manual at youfixthis.com

TABLE OF CONTENTS

Safety

Wheel Loader Safety S0103000

Specifications

Specifications for Mega 160 / 160TC S0203050

General Maintenance

General Maintenance Procedures S0302000

Standard Torques S0309000

Upper Structure

Counterweight S0403020

Fuel Transfer Pump S0405500

Hydraulic oil tank S0406020

Lower Structure and Chassis

Center Joint (Articulation Joint) S0502000

Engine and Drive Train

Axle (Clark-Hurth) S0602000

Air-Conditioner S0605050K

Transmission (ZF 4WG130) S0607060

Transmission Error Codes (ZF) S0607900C

Wheel Assembly S0608000

Hydraulics

Hydraulic System S0702160

Accumulator S0703000

Cylinders S0705010

PREVIEW - YOUFIXTHIS.COM

Download full manual at youfixthis.com

Pilot Pump (John S. Barnes) S0708440
Main Pump (Haldex G20 and G30 Series) S0708450
Main Control Valve (Husco).....S0709445
Brake and Pilot Supply Valve S0709525
Pilot Control Valve Lever S0709530
Option Solenoid Valve S0709535
Priority Valve.....S0709650
Power Steering Unit.....S0709720
Hydraulic Schematic (Mega 160).....S0793030

Electrical System

Electrical System S0802170
Electrical Schematic (Mega 160) S0893030

Attachments

Loader Arm Assembly S0904010

PREVIEW - YOUFIXTHIS.COM

Download full manual at youfixthis.com

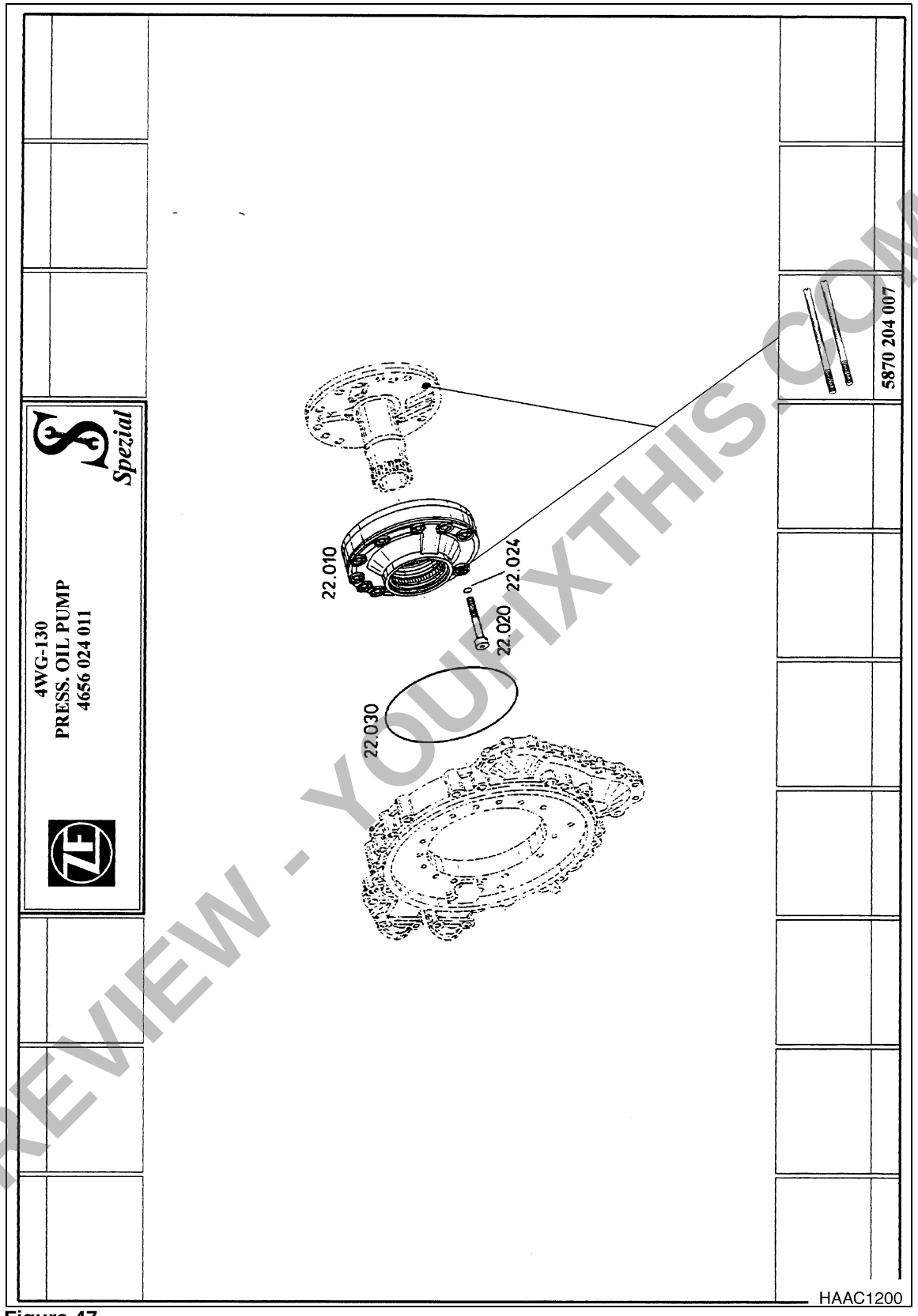

Figure 47

PREVIEW - YOUFIXTHIS.COM

Download full manual at youfixthis.com

5. Preload compression spring and fix it by means of circlip.

   (S) Assembly aid - 5870 345 086

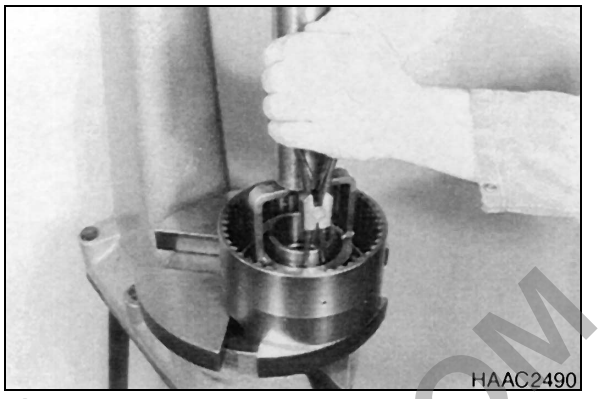

Figure 165

PREVIEW - YOUFIXTHIS.COM

Download full manual at youfixthis.com

DEFINITION OF OPERATING MODES

NORMAL

There's no failure detected in the transmission-system or the failure has no or slight effects on transmission control. TCU will work without or in special cases with little limitations. (see following table)

SUBSTITUTE CLUTCH CONTROL

TCU can't change the gears or the direction under the control of the normal clutch modulation. TCU uses the substitute strategy for clutch control. All modulations are only time controlled. (Comparable with EST 25)

LIMP-HOME

The detected failure in the system has strong limitations to transmission control. TCU can engage only one gear in each direction. In some cases only one direction will be possible.

TCU will shift the transmission into neutral at the first occurrence of the failure. First, the operator must shift the gear selector into neutral position.

If output speed is less than a threshold for neutral to gear and the operator shifts the gear selector into forward or reverse, the TCU will select the limp-home gear.

If output speed is less than a threshold for reversal speed and TCU has changed into the limp-home gear and the operator selects a shuttle shift, TCU will shift immediately into the limp-home gear of the selected direction.

If output speed is greater than the threshold, TCU will shift the transmission into neutral. The operator has to slow down the vehicle and must shift the gear selector into neutral position.

TRANSMISSION-SHUTDOWN

TCU has detected a severe failure that disables control of the transmission.

TCU will shut off the solenoid valves for the clutches and also the common power supply (VPS1). Transmission shifts to Neutral. The park brake will operate normally, also the other functions which use ADM 1 to ADM 8.

The operator has to slow down the vehicle. The transmission will stay in neutral.

TCU-SHUTDOWN

TCU has detected a severe failure that disables control of system.

TCU will shut off all solenoid valves and also both common power supplies (VPS1, VPS2). The park brake will engage, also all functions are disabled which use ADM 1 to ADM 8.

The transmission will stay in neutral.

PREVIEW - YOUFIXTHIS.COM

Download full manual at youfixthis.com

10. Pick up the rear bearing block, with seal side up and with open end of the E-seal facing the intake side of the pump, place over the drive and idler gear shafts.

11. Install two dowel pins in the holes in the mounting flange or two long dowel pins through gear housing if pump is a multiple section pump.

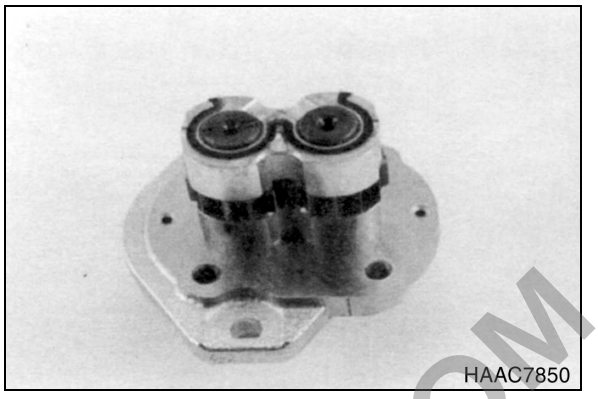

Figure 23

12. To install the o-rings in the gear housing, apply a light coating of petroleum jelly in the grooves on both sides of the gear housing. Also coat the new o-rings and install them in the grooves.

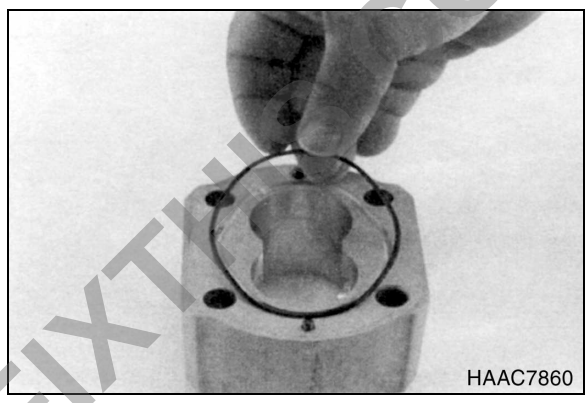

Figure 24

13. Gently slide the gear housing over the rear bearing block assembly, slide housing down until the housing engages the dowel pins. Press firmly in place with hands, do not force or use any tool. Check to make sure the intake port in the housing is on the same side as the open end of the E-seal and that the marked lines on the mounting flange and gear housing are in alignment.

14. The surface of the rear bearing block should be slightly below the face of the gear housing. If the bearing block sits higher then the rear face of the gear housing then the E-seal or o-ring have shifted out of the groove. If this is the case, remove the gear housing and check for proper seal installation.

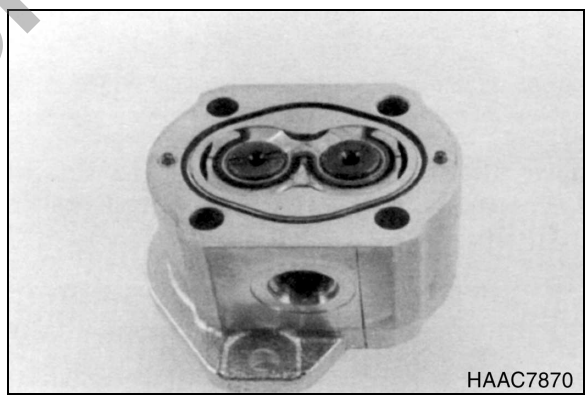

Figure 25

PREVIEW - YOUFIXTHIS.COM

Download full manual at youfixthis.com

AS ANTI-VOID

The anti-void unit supplies oil to the high pressure port "HP" when cavitation has occurred. A lower pressure exists in the port "HP" compared to the low pressure chamber "LP." The difference between the effective area of diameter "A" and "G" causes imbalance of the check valve poppet "K" which unseats, thus allowing oil from the low pressure chamber "LP" to enter the port "HP" and fill the void.

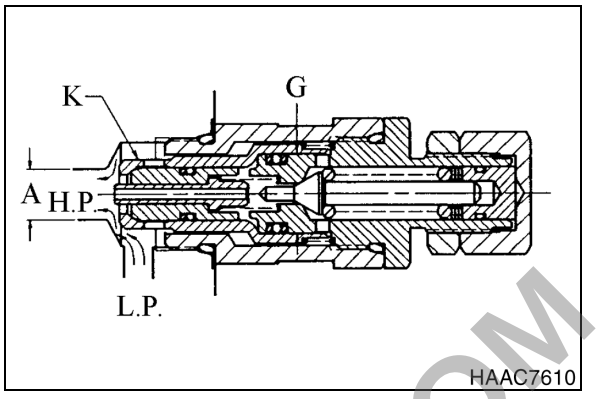

Figure 15

AS SEPARATE ANTI-VOID

The anti-void check valve opens when cavitation occurs in the high pressure port "HP" and supplies oil from the reservoir "LP" to help fill this void. The poppet "M" is held on its seat by the port pressure "HP," acting on the larger area behind the "O" ring. When pressure "HP" drops below atmosphere, the tank pressure "LP" operating on the annular area A~-A2 will overcome the port pressure "HP" and the spring force to open the poppet. When the void is eliminated the spring will return the poppet which will then be tightly seated by the port pressure "HP."

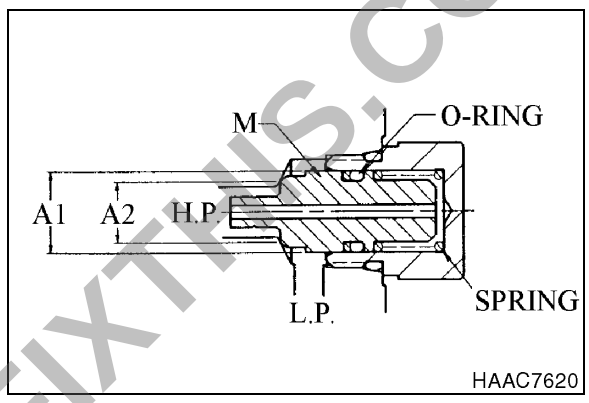

Figure 16

PREVIEW - YOUFIXTHIS.COM

Download full manual at youfixthis.com

ENGINE STARTING CIRCUIT

OPERATION DURING PROCESS

When the starter switch is turned to the start position, the safety start relay (14) is opened by the current flow from the connected "52" and "67" terminals of the transmission controller (13) and the "S" and "E" terminals of the starter controller (7) are connected. At this time the contacts in the starter relay (8) are closed by the current flow battery (1),to the fusible link (3), to the "B" terminal of the starter relay (5), to the "C" terminal of the starter relay (8), to the "D" terminal of the starter relay (8), to the "S" terminal of the starter controller (7), to the "E" terminal of the starter controller, and then to the ground.

When the contact point "B" and "PP" of the starter relay (8) are connected, the pinion gear of the starter (9) is pushed forward and makes contact with the ring gear of the fly wheel and the internal contacts of the starter are connected.

The current flow from the battery (1), to the "A" terminal of the battery relay (2), to the "B" terminal of the battery relay (2), and then to the "30" terminal of the starter (9). The starter motor is rotated and the engine is started.

The engine can be cranked only when the transmission selector switch (11) is the neutral position. If the transmission selector switch (11) is in the forward or reverse, the current that flows the switch (11) to the starter controller (7) opens the path to ground for the starter relay (8). This prevents the start relay (8) from closing.

PREVIEW - YOUFIXTHIS.COM

Download full manual at youfixthis.com

MEGA 160TC

The following figure identifies the location of major machine components.

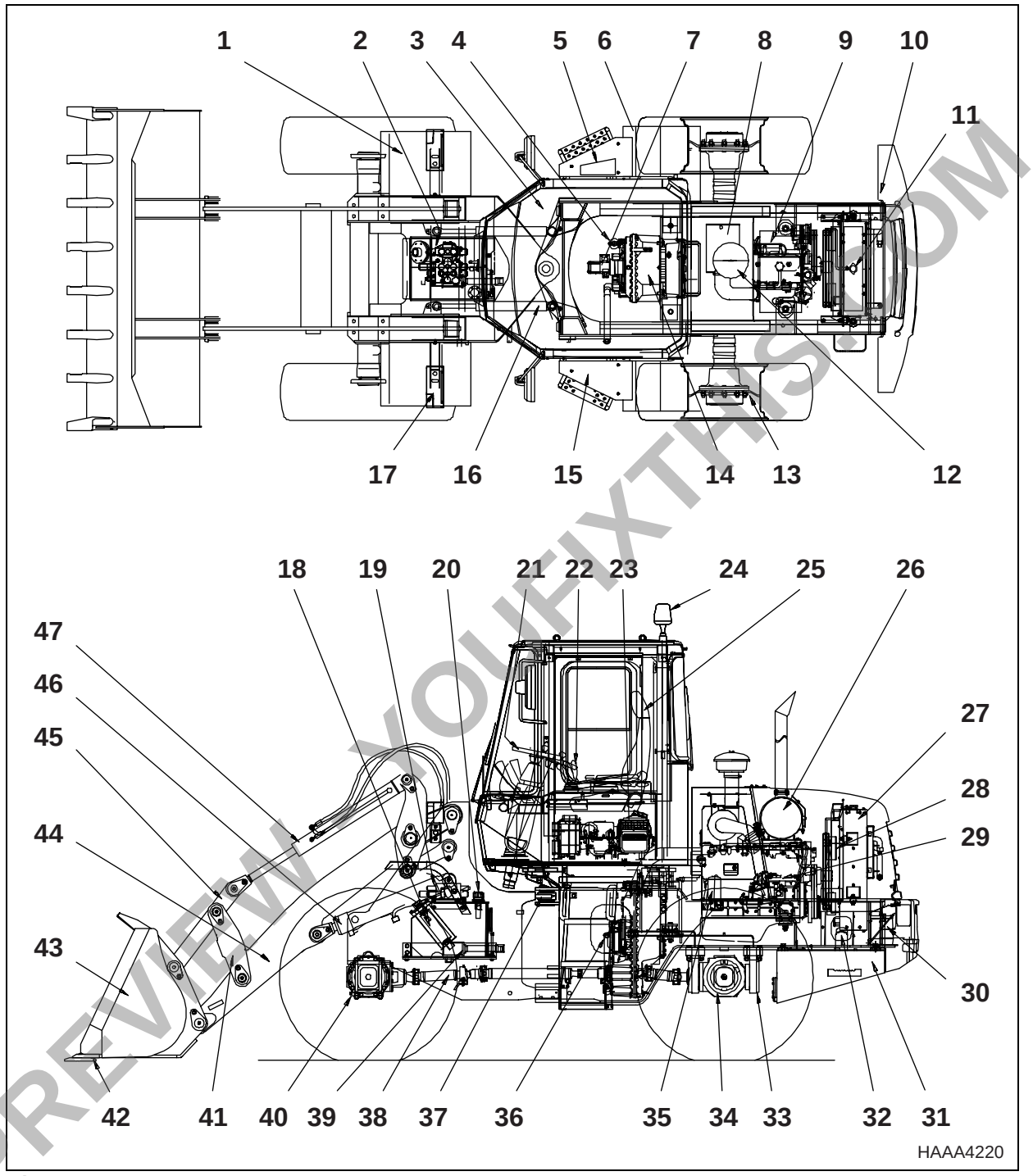

Figure 2

PREVIEW YOUFIXTHIS.COM

Download full manual at youfixthis.com

TABLE OF CONTENTS

Torque Values for Standard Metric Fasteners 3
Torque Values for Standard U.S. Fasteners..... 4
Type 8 Phosphate Coated Hardware 6
Torque Values for Hose Clamps 7
Torque Values for Split Flanges 8
Torque Wrench Extension Tools 9
Torque Multiplication 9
Other Uses for Torque Wrench Extension Tools 10
Tightening Torque Specifications (Metric) 10

PREVIEW - YOUFIXTHIS.COM

Download full manual at youfixthis.com

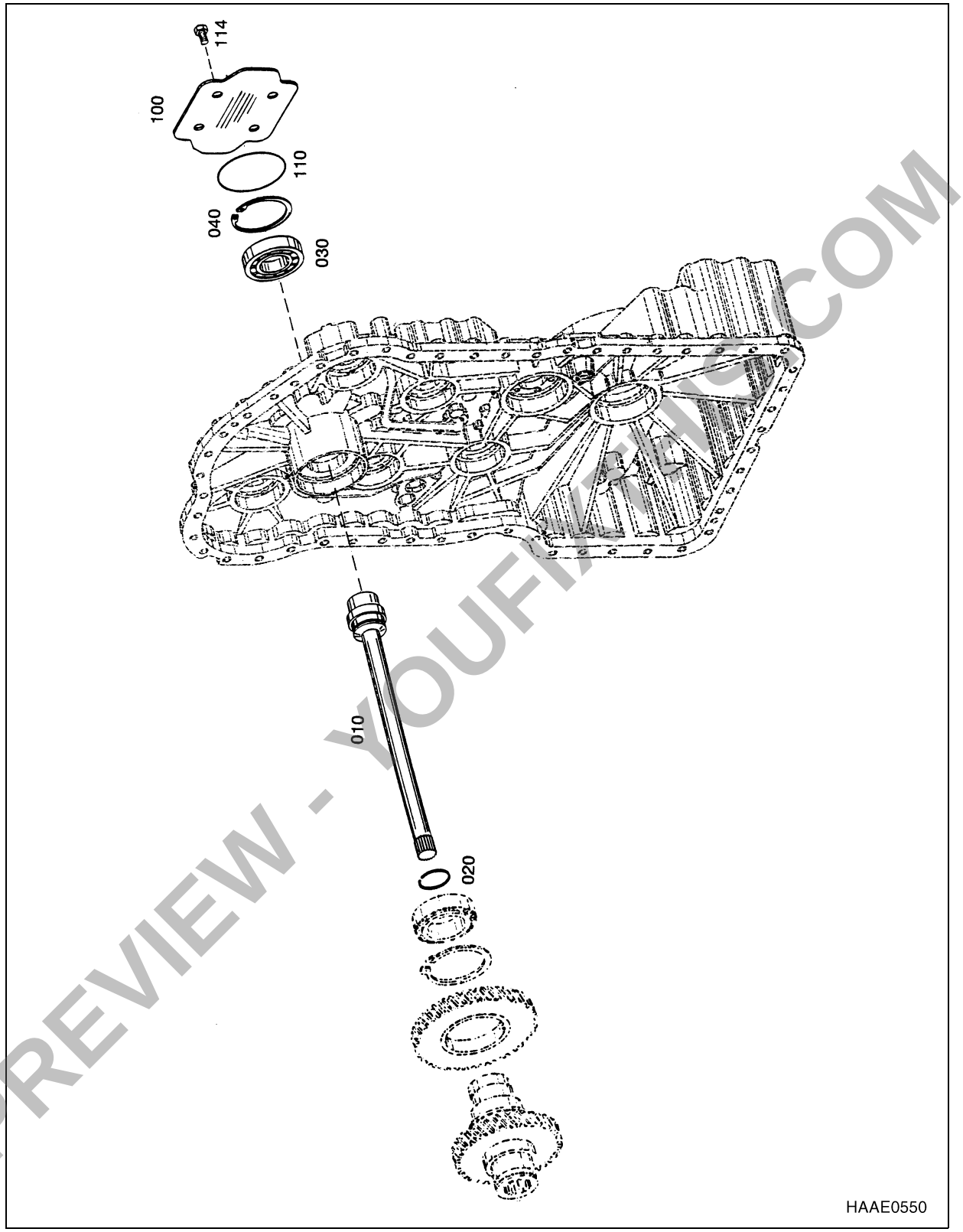

Figure 14

PREVIEW - YOUFIXTHIS.COM

Download full manual at youfixthis.com

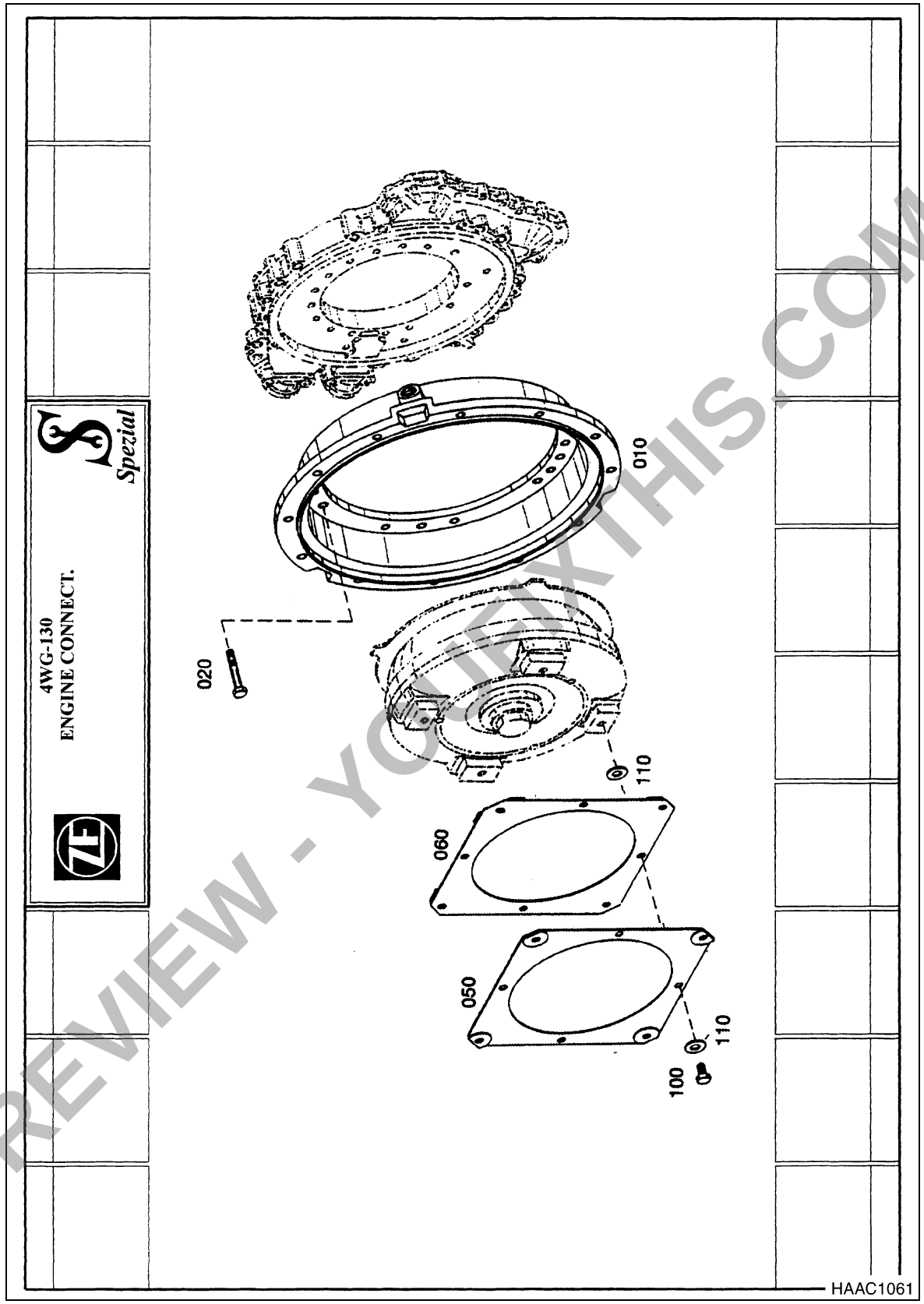

Figure 34

PREVIEW - YOUFIXTHIS.COM

Download full manual at youfixthis.com

Remove Transmission Pump

1. Loosen socket head screws.

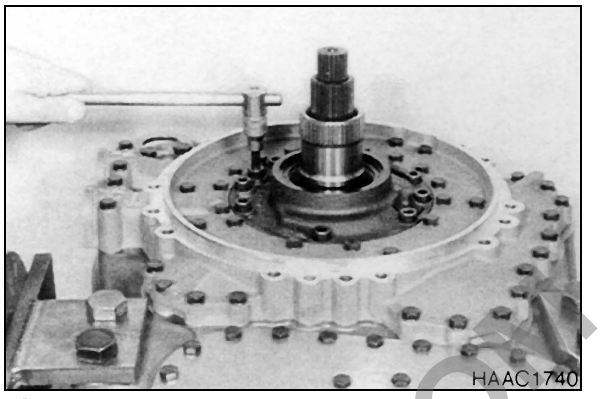

Figure 99

2. Apply separating device (S) on the splines run out of the stat or shaft and pull pump (compl.) out of the housing bores, using two-leg puller.

   (S) Separating device - 5870 300 024

   (S) Two-leg puller - 5870 970 004

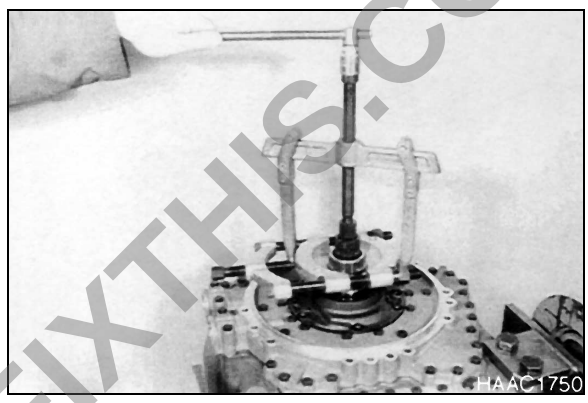

Figure 100

3. Separate transmission pump from stat or.
4. Separate cam plate from pump.

   NOTE: *If traces of wear should be encountered in the pump housing or the cam disk, the complete pump has to be renewed.*

5. Now, fit cam disk again and fix it by means of grooved pins (2x).

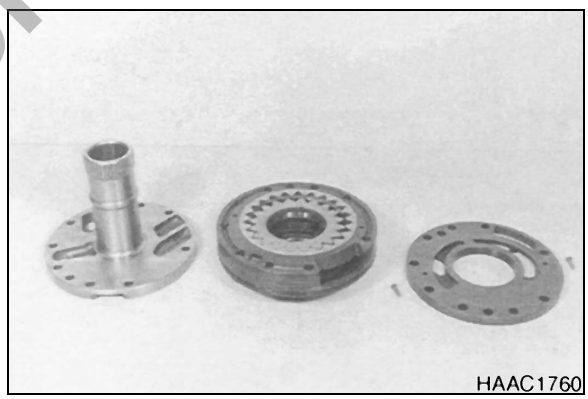

Figure 101

6. Loosen hex. head screws and remove oil feed housing.
7. Now, remove flat gasket.

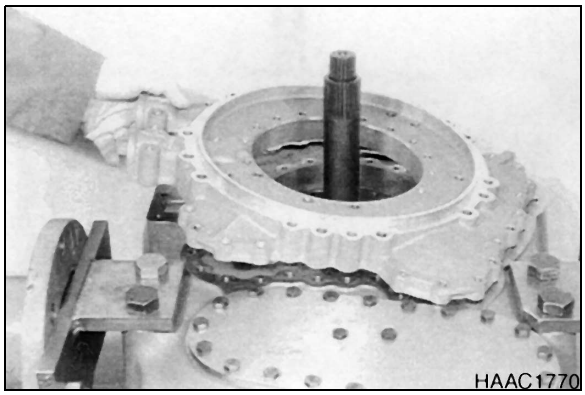

Figure 102

PREVIEW - YOUFIXTHIS.COM

Download full manual at youfixthis.com

4. Check function of the drain valve.

   NOTE: *Ball may not seize, if necessary clean by means of compressed air.*

5. Insert both O-rings (Arrows) scroll free into the piston recesses and oil them.

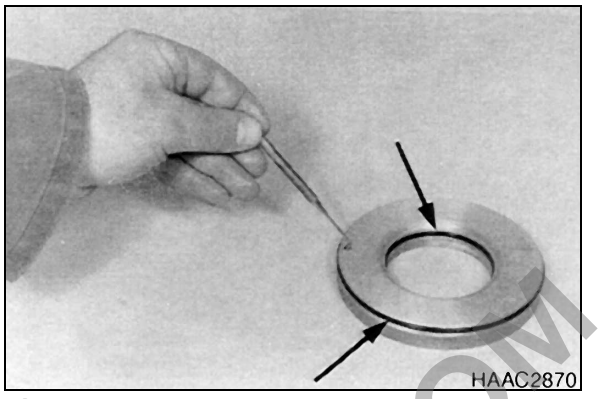

Figure 202

6. Introduce piston until contact is obtained.

   NOTE: *Pay attention to the installation position, see Figure.*



Figure 203

7. Install compression spring and spring cup (2x), preload and fix by means of circlip.

   (S) Assembly aid - 5870 345 085

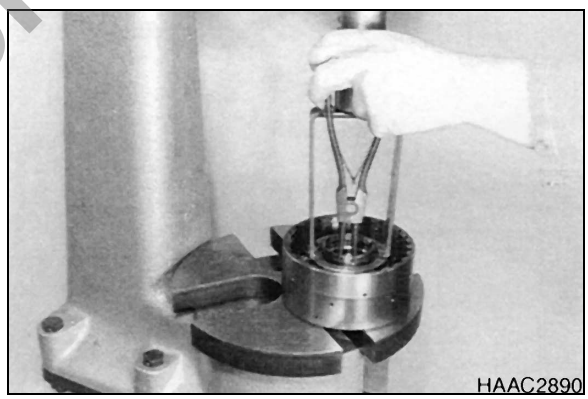

Figure 204

PREVIEW - YOUFIXTHIS.COM

Download full manual at youfixthis.com

TABLE OF CONTENTS

General Description 3
Theory of Operation 3
Parts List 4
Bolt Torque Specifications 4
Troubleshooting, Testing and Adjustment 5
Tools Required 5
Disassembly 6
Inspect Parts for Wear 9
General Information 10
Reverse Shaft Rotation of Pump 10
Reassembly 11
Placing Pump Back Into Service 16

PREVIEW - YOUFIXTHIS.COM

Download full manual at youfixthis.com

17. Push neutral position springs out of groove in spool. See Figure 30.

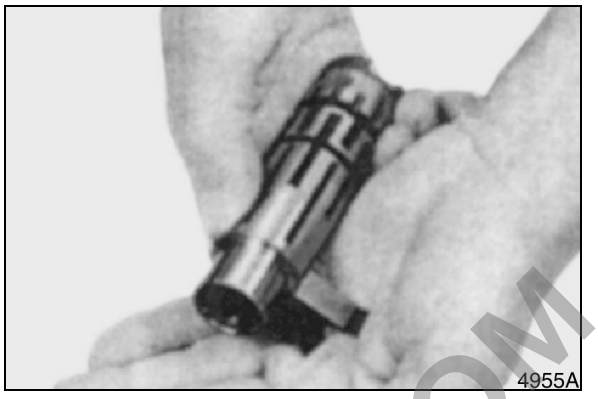

Figure 30

18. Remove dust seal from housing. See Figure 31. Remove O-ring and backup ring from inside housing.

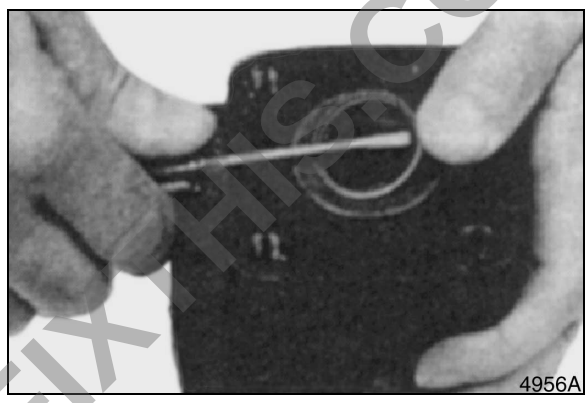

Figure 31

19. Figure 32, shows all parts removed from steering unit. Clean all parts before assembly. Use only new O-rings and seals.

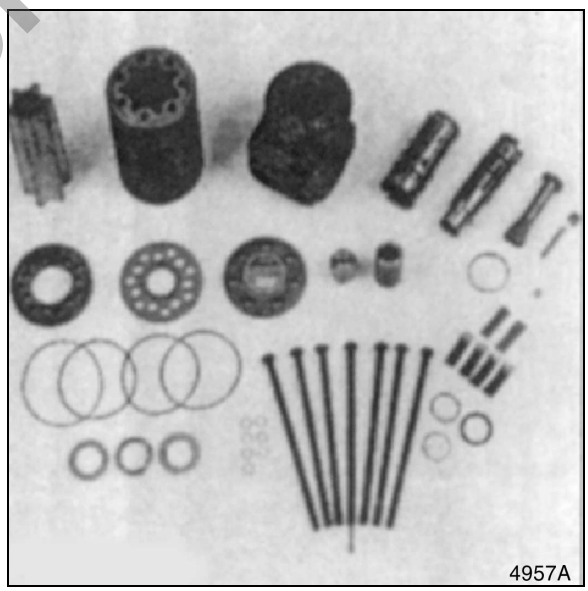

Figure 32

CLEANING AND INSPECTION

For general cleaning and inspection procedures, refer to "General Maintenance Procedures" section.

PREVIEW - YOUFIXTHIS.COM

Download full manual at youfixthis.com

PREVIEW ONLY

You're viewing 17 of 600 pages

The full manual includes:

- All 600 pages, complete
- Searchable PDF (find any keyword)
- No watermarks
- Instant download
- Print-ready quality

GET FULL MANUAL NOW

Daewoo Mega 160, Mega 160TC Shop Manual

Scan or click anywhere
youfixthis.com

Click anywhere on this page to get the full manual