Solar 015 PLUS

Shop Manual

023-00038E

Serial Number 1001 and Up

PREVIEW - YOUFIXTHIS.COM

Daewoo reserves the right to improve our products in a continuing process to provide the best possible product to the market place. These improvements can be implemented at any time with no obligation to change materials on previously sold products. It is recommended that consumers periodically contact their distributors for recent documentation on purchased equipment.

This documentation may include attachments and optional equipment that is not available in your machine's package. Please call your distributor for additional items that you may require.

Illustrations used throughout this manual are used only as a representation of the actual piece of equipment, and may vary from the actual item.

Download full manual at youfixthis.com

TABLE OF CONTENTS

Safety

Track Excavator Safety.....S0102040

Specifications

Specifications for Solar 015 PLUS..... S0202070K

General Maintenance

General Maintenance Procedures.....S0302000

Standard Torques.....S0309000

Upper Structure

Lower Structure and Chassis

Track Assembly S0505130K

Engine and Drive Train

Engine..... S0601010K

Hydraulics

Center Joint (Swivel).....S0704060

Cylinders.....S0705080

Swing Motor.....S0707240

Travel Motor (With Gear Box)..... S0707385K

Main Pump..... S0708490K

Pilot Control Valve (Work Lever / Joystick).....S0709480

Main Control Valve S0709495K

Solenoid Valve..... S0709515K

Hydraulic Schematic (Solar 015 PLUS)..... S0792150K

PREVIEW - YOUFIXTHIS.COM

Download full manual at youfixthis.com

DAEWOO
DAEWOO HEAVY INDUSTRIES & MACHINERY LTD.

TRACK EXCAVATOR SAFETY

⚠ CAUTION!

Follow all safety recommendations and safe shop practices outlined in the front of this manual or those contained within this section.

Always use tools and equipment that is in good working order.

Use lifting and hoisting equipment capable of safely handling load.

Remember, that ultimately safety is your own personal responsibility.

MODEL	SERIAL NUMBER RANGE
Solar 015	0001 and Up
Solar 015 PLUS	1001 and Up

PREVIEW - YOUFIXTHIS.COM

Copyright 2000 Daewoo

August 2000

Download full manual at youfixthis.com

GENERAL SPECIFICATIONS

Specifications			Solar 015 PLUS		
Equipment Weight (Canopy / Cabin)			1,550 kg (3,417.2 lb)/1570 kg (3,461.3 lb)		
Bucket Capacity			0.04 m^3 (0.05 yd^3)		
Bucket Width			450 mm (17.72 in)		
Engine	Manufacturer and Model		MITSUBISHI L3E		
	Piston Displacement		0.952 liters		
	Rated Output		17.2 ps (16.97 hp) @ 2,300 rpm		
	Torque		5.5 kg•m (40 ft lb) @ 2,100 rpm		
Speeds	Travel Speed		2.2 km/h (1.37 MPH)		
	Swing Speed		11 rpm		
	Max. Grade		25°		
	Max. Digging Power		1,136 kg (2,504.5 lb)		
Overall Dimensions	Total Length		3,755 mm (147.8 in)		
	Total Width (Canopy / Cabin)		1,300 mm (51.18 in) / 1,000 mm (39.37 in)		
	Total Height (Canopy / Cabin)		2,345 mm (92.32 in) / 2,290 mm (90.16 in)		
	Dozer Blade	Width and Height (Canopy / Cabin)	1,300 mm x 235 mm (51.18 in. x 9.25 in) / 1,000 x 235 mm (39.37 in. x 9.25 in)		
		Max Ground Clearance	155 mm (6.10 in)		
Track Assembly	Ground Pressure		0.25 kg/cm^2 (3.56 psi)		
	Travel Motor Type		Orbitrol		
	Shoe	Material	Rubber		
		Operating Control Type	Grease Cylinder Type		
Hydraulic	Pump Type		Gear Pump		
	Main Pressure kg/cm^2 (psi)		P1	P2	P3
			210 (2,987)	210 (2,987)	165 (2,346)
	Output/Discharge Capacity - liters/min (DBMS)		11.7 (3.09)	11.7 (3.09)	10.7 (2.82)
	Hydraulic Oil Tank Capacity		26 liters (6.84 U.S. gal.)		
Miscellaneous Fluid Capacities	Engine Oil Capacity		4.1 liters (1.08 U.S. gal.)		
	Fuel Tank Capacity		19 liters (5 U.S. gal.)		
	Coolant Capacity		1.8 liters (0.48 U.S. gal.)		

PREVIEW - YOUFIXTHIS.COM

Download full manual at youfixthis.com

REMOVAL AND DISASSEMBLY

1. Refer to "Track Removal" section to remove the track assembly before proceeding to the following steps.
2. Remove spring pin (7, Figure 20) from guide (8).
3. Remove guide (8, Figure 20) from shaft (3).
4. Remove oil seal (6, Figure 20) using a screw driver.

   NOTE: *Once removed, the oil seal should not be reused.*

5. Remove snap ring (5, Figure 20), bearing (4), and shaft (3).
6. Repeat steps 2 - 5 for other side.

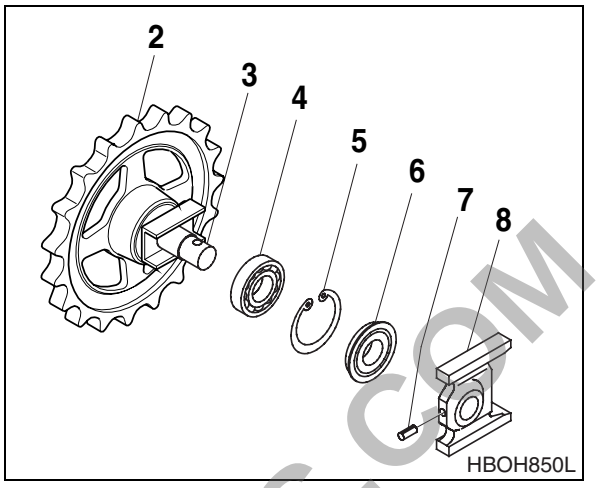

Figure 20

REASSEMBLY AND INSTALLATION

1. Degrease, clean and dry all parts before reassembly.
2. Insert shaft (3, Figure 20) into idler gear (2).
3. Assemble bearing (4, Figure 20) onto shaft (3) and install snap ring (5)
4. Install new grease seal (6, Figure 20).
5. Install Shaft guide (8, Figure 20) and spring pin (7).
6. Repeat steps 1 - 5 for other side.
7. Refer to "Track Installation" section for track assembly installation procedures.

PREVIEW - YOUFIXTHIS.COM

Download full manual at youfixthis.com

FRONT IDLER ROLLER

PARTS LIST

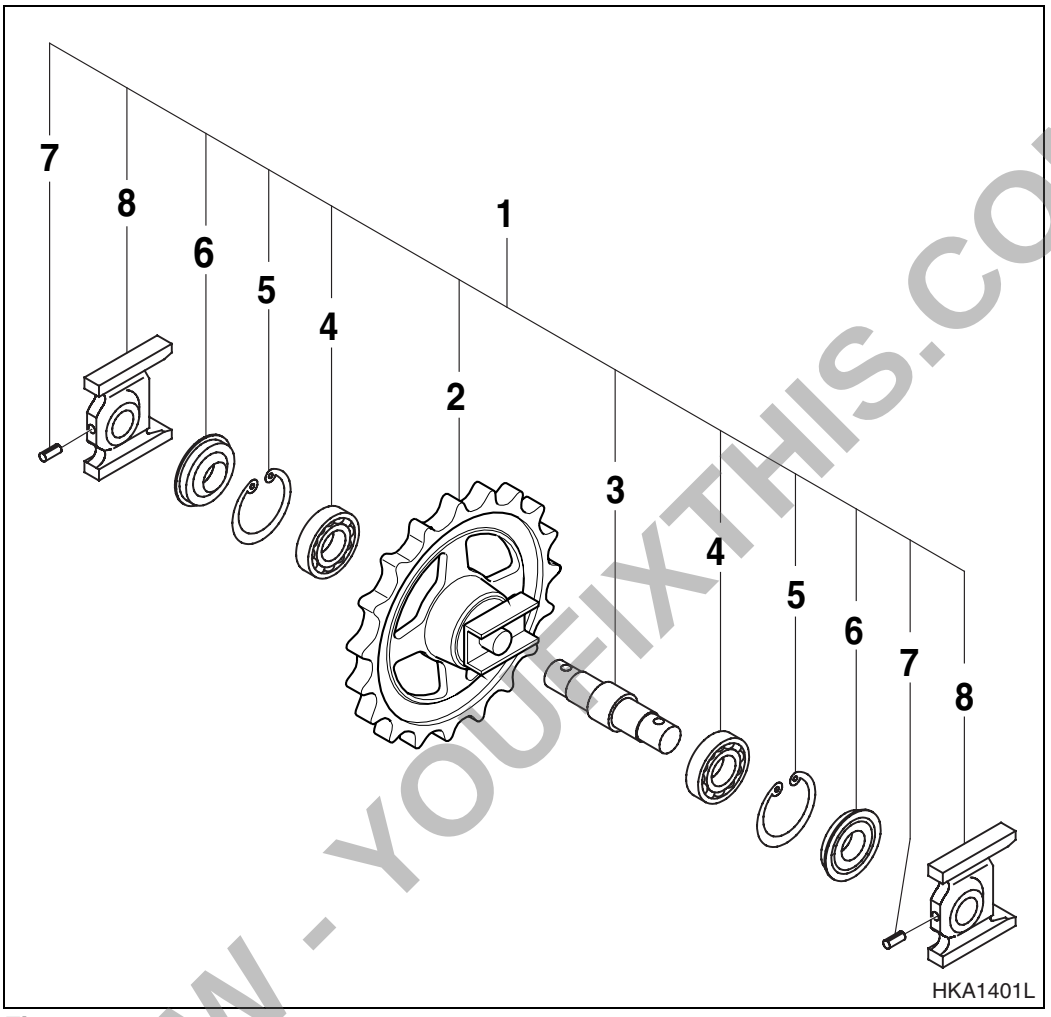

Figure 19

Reference Number	Description
1	Front Idler Assembly
2	Idler
3	Shaft
4	Bearing (BL-207)

Reference Number	Description
5	Snap Ring
6	Oil Seal
7	Spring Pin
8	Guide

PREVIEW - YOUFIXTHIS.COM

Download full manual at youfixthis.com

GENERAL DESCRIPTION

Schematic(s) presented in this section are laid out on facing pages.

An overlapping edge has been taken into consideration so that a photocopy can be made and pasted together to make a complete schematic.

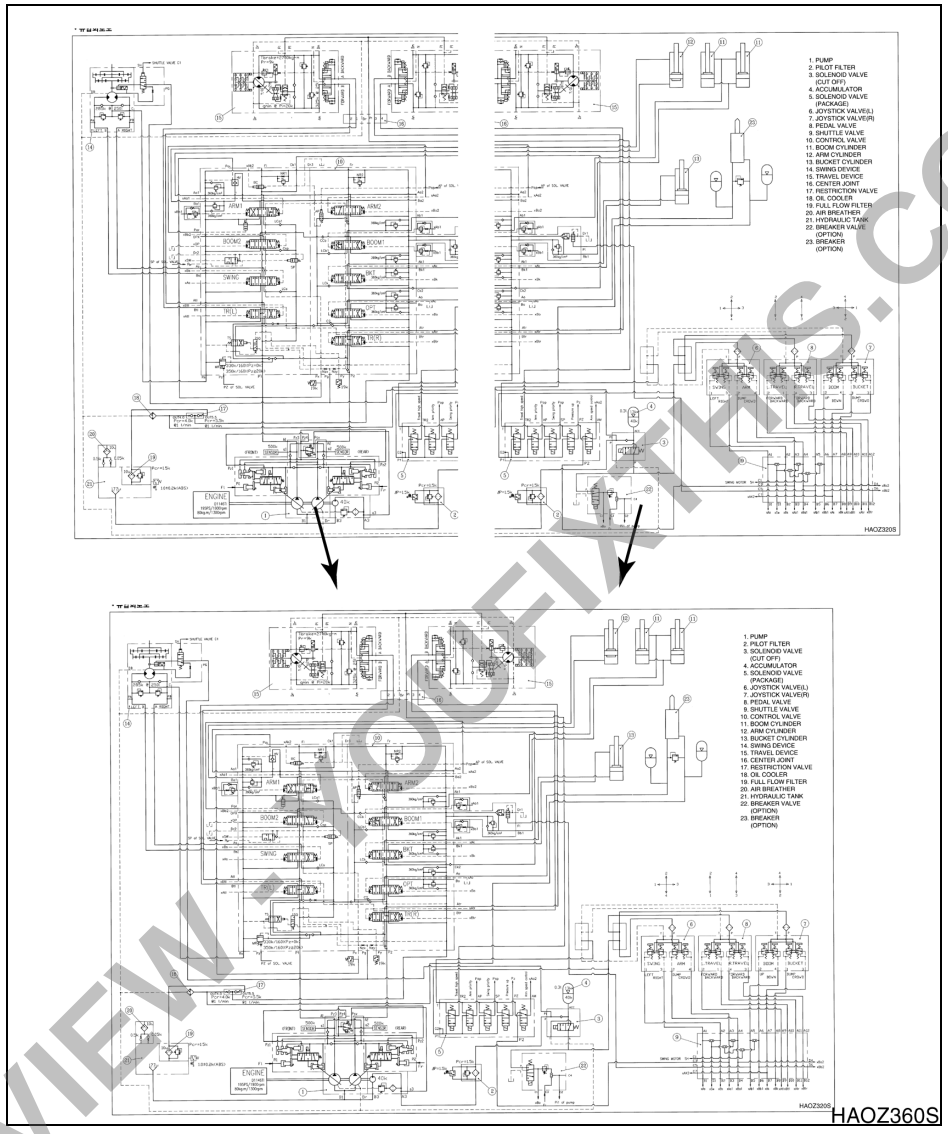

Figure 1

PREVIEW - YOUFIXTHIS.COM

Download full manual at youfixthis.com

GENERAL DESCRIPTION

Schematic(s) presented in this section are laid out on facing pages.

An overlapping edge has been taken into consideration so that a photocopy can be made and pasted together to make a complete schematic.

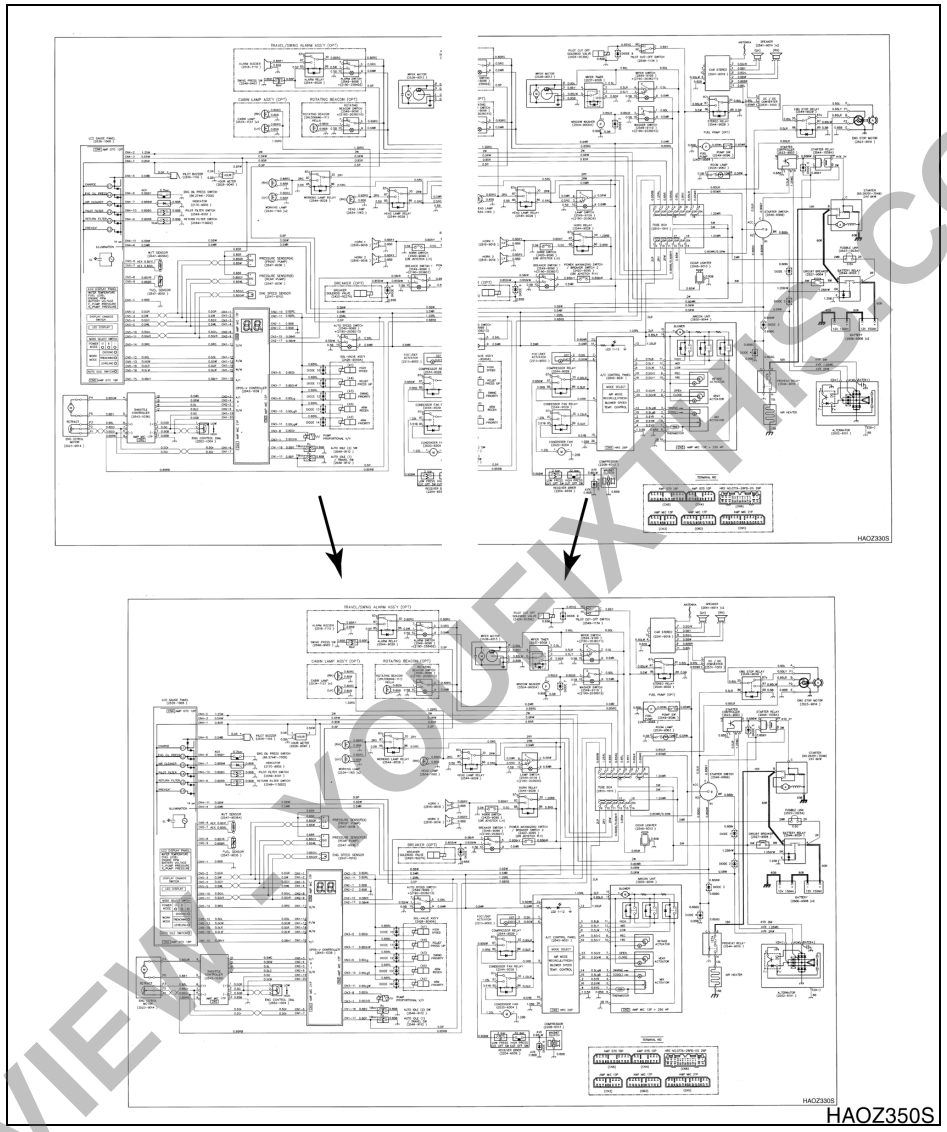

Figure 1

PREVIEW YOUFIXTHIS.COM

Download full manual at youfixthis.com

PREVIEW - YOUFIXTHIS.COM

Download full manual at youfixthis.com

ENGINE PERFORMANCE CURVES (ISO 3046 STANDARD)

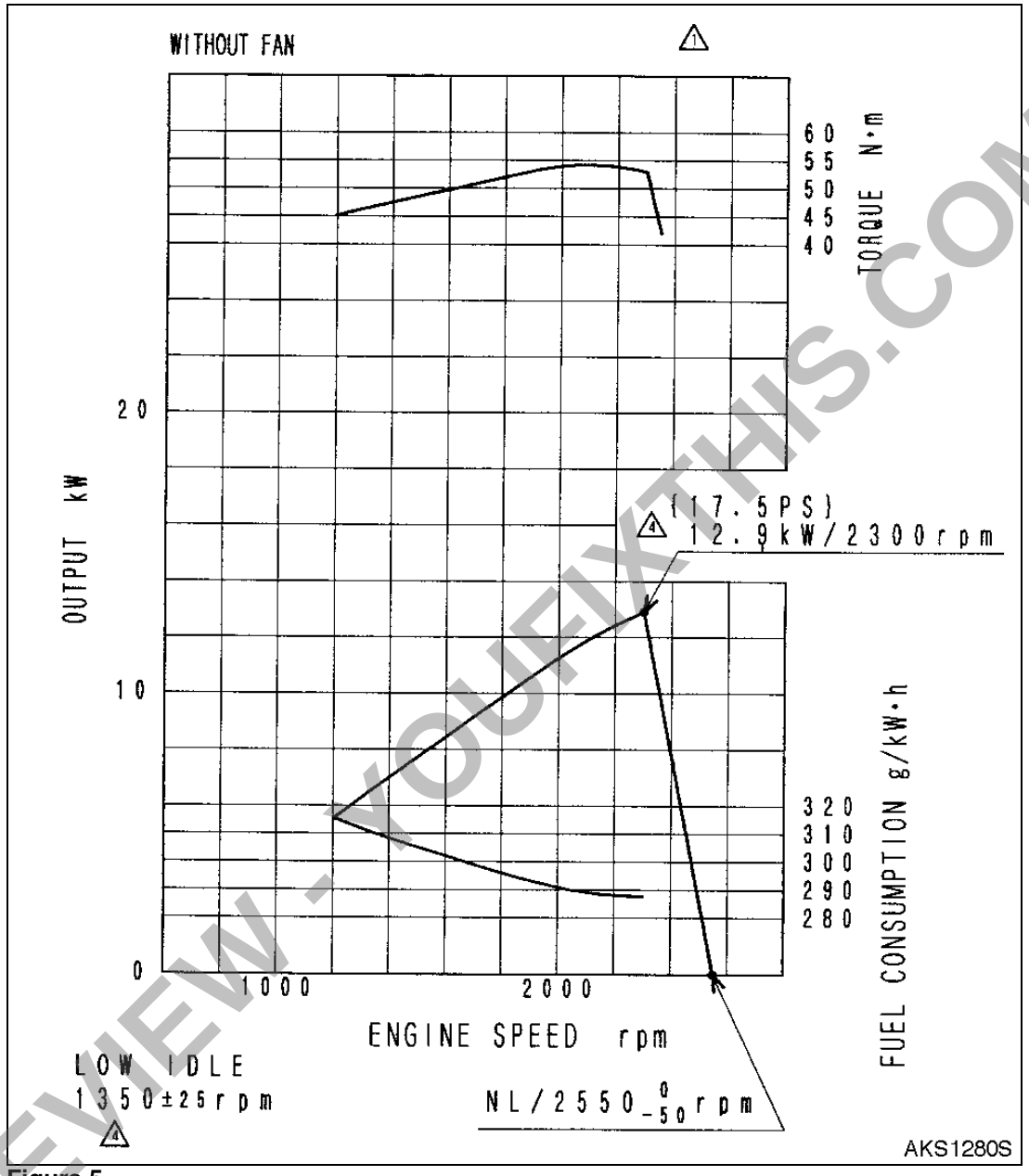

Figure 5

NOTE: *Barometric Pressure: 0.1 MPa (14.5 psi)*

Temperature: 25°C (77°F)

Cooling Fan: ∅ 290 mm (11.42 in) sucker fan

Alternator: 12 V, 40 amp

Relative Humidity : 30%

PREVIEW - YOUFIXTHIS.COM

Download full manual at youfixthis.com

LOWER STRUCTURE AND CHASSIS

PREVIEW - YOUFIXTHIS.COM

Download full manual at youfixthis.com

ENGINE SPECIFICATIONS

Model		Item					
		L2A	L2C	L2E	L3A	L3C	L3E
General	Engine Type	4-cycle, Water Cooled, Vertical, Diesel					
	Firing Order	1-2			1-3-2		
	Compression Ratio	23:1					
	Combustion Chamber	Swirl Chamber					
	Dry Weight	61.0 kg (134 lb)			75.0 kg (165 lb)		
Cylinders	Number of Cylinders	2			3		
	Bore x Stroke	65 x 70 mm (2.56 x 2.76 in)	70 x 70 mm (2.76 - 2.76 in)	76 x 70 mm (2.99 - 2.76 in)	65 x 70 mm (2.56 x 2.76 in)	70 x 70 mm (2.76 - 2.76 in)	76 x 70 mm (2.99 - 2.76 in)
	Total Displacement	464 cc (28.32 in^3)	538 cc (32.83 in^3)	635 cc (38.75 in^3)	696 cc (42.47 in^3)	808 cc (49.31 in^3)	952 cc (58.09 in^3)
Performance	Maximum Power Maximum Torque Specific Fuel Consumption	See the engine performance curves.					
List Ability	In every direction (to lower limit of oil level)	25° continuous			30° in a short time (within 30 min.)		
Fuel System	Injection Pump	Bosch NC type					
	Nozzle	Throttle type					
	Fuel	JIS No. 2 or No. 3 Diesel Fuel					
Lubrication System	Lubricating Method	Forced Lubrication					
	Oil Filtration	Paper-element Filter (Full-flow Type)					
	Oil Capacity Upper Limit/Lower Limit (Excluding 0.5 liters (0.13 U.S. gal.) for oil filter)	2.4/1.4 liters (0.63/0.37 U.S. gal.)			3.0/1.5 liters (0.79 - 0.40 U.S. gal.) 3.6/1.8 liters (0.95 - 0.48 U.S. gal.) or 4.8/3.0 liters (1.3 - 0.79 U.S. gal.)		
Cooling System	Cooling Method	Forced water circulation with pressurized radiator.					
	Coolant Capacity (Except Radiator and Hose)	1.20 liters (0.32 U.S. gal.)			1.80 liters (0.48 U.S. gal.)		
Accessories	Alternator	12 V @ 15 A or 12 V @ 40 A					
	Starting Motor	12 V @ 1.2 kW or 12 V @ 0.6 kW					
	Battery	45 Ah or more			60 Ah or more		

PREVIEW - YOUFIXTHIS.COM

Download full manual at youfixthis.com

Removal of Valves Camshaft

1. When it is necessary to remove only valve camshaft, use following procedure:
   A. Dismount cylinder head assembly.
   B. Pull out push rods.
   C. Pull out tappets.
   D. Remove gear case assembly.
   E. Remove camshaft stopper bolt.
   F. Draw camshaft assembly out.
2. Removal of injection pump camshaft.
   A. Disconnect injection pipes.
   B. Remove injection pump assembly.
   C. Remove rear case assembly.
   D. Remove shaft rear cover.
   E. Remove stopper bolt.
   F. Pull out shaft to front side.

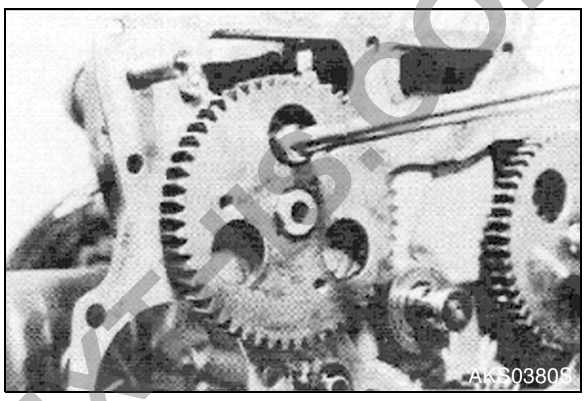

Figure 72 REMOVING INJECTION PUMP CAMSHAFT

PREVIEW - YOUFIXTHIS.COM

Download full manual at youfixthis.com

INSPECTION

1. Check air cleaner body and cover for deformation, corrosion, and damage. If any defect is found, repair or replace.
2. If body and cover (element) are not airtight, dust would intrude into engine, causing cylinders and pistons to wear down early. Check interior of body for evidences of intrusion of dust. If any, repair air-leak part.
3. Check element and packing for damage and air leak. If necessary, clean or replace element.
4. Check element for dirtiness, clogging, and damage. If necessary, clean or replace element.
5. Check intake hose for damage and cracks. If necessary, replace hose.
6. When installing air cleaner, properly position it so that air inlet opening faces sideward or downward. Also, install dust pan with arrow mark "TOP" indicating top.

PREVIEW - YOUFIXTHIS.COM

Download full manual at youfixthis.com

HYDRAULICS

PREVIEW - YOUFIXTHIS.COM

Download full manual at youfixthis.com

7. After assembling O-rings (9022S-6, 9022S-12) to wear plate, attach seat roller.

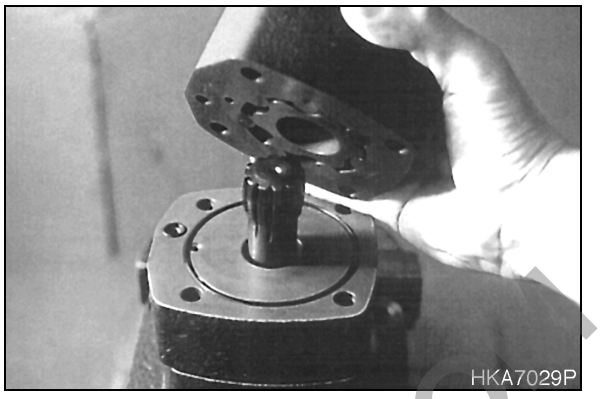

Figure 28

8. Assemble valve drive to seat roller.

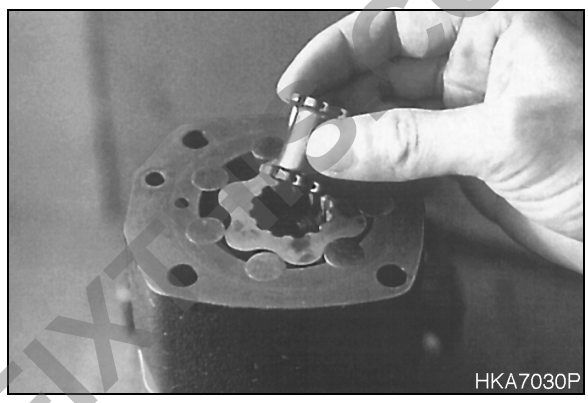

Figure 29

9. After attaching O-ring (9022S-12) (9022S-6) to valve plate, assemble valve plate.

   NOTE: *When assembling, be careful to match up the drain hole of valve plate and seat roller.*

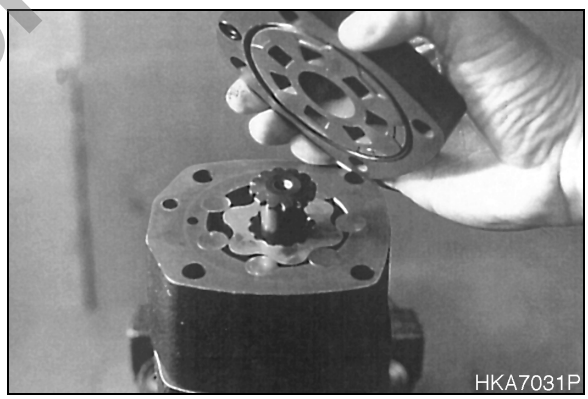

Figure 30

PREVIEW - YOUFIXTHIS.COM

Download full manual at youfixthis.com

DAEWOO
DAEWOO HEAVY INDUSTRIES & MACHINERY LTD.

PILOT CONTROL VALVE (WORK LEVER / JOYSTICK)

⚠ CAUTION!

Follow all safety recommendations and safe shop practices outlined in the front of this manual or those contained within this section.

Always use tools and equipment that is in good working order.

Use lifting and hoisting equipment capable of safely handling load.

Remember, that ultimately safety is your own personal responsibility.

MODEL	SERIAL NUMBER RANGE
Solar 015	0001 and Up
Solar 015 PLUS	1001 and Up

PREVIEW - YOUFIXTHIS.COM

Copyright 2001 Daewoo

July 2001

Download full manual at youfixthis.com

DAEWOO
DAEWOO HEAVY INDUSTRIES & MACHINERY LTD.

ELECTRICAL SYSTEM

⚠ CAUTION!

Follow all safety recommendations and safe shop practices outlined in the front of this manual or those contained within this section.

Always use tools and equipment that is in good working order.

Use lifting and hoisting equipment capable of safely handling load.

Remember, that ultimately safety is your own personal responsibility.

MODEL	SERIAL NUMBER RANGE
Solar 015 PLUS	1001 and Up

PREVIEW - YOUFIXTHIS.COM

Copyright 2001 Daewoo

July 2001

Download full manual at youfixthis.com

PREVIEW ONLY

You're viewing 18 of 406 pages

The full manual includes:

- All 406 pages, complete
- Searchable PDF (find any keyword)
- No watermarks
- Instant download
- Print-ready quality

GET FULL MANUAL NOW

Daewoo Solar 015 PLUS Shop Manual

Scan or click anywhere
youfixthis.com

Click anywhere on this page to get the full manual