Dimension	Description	Canopy Model			
	Model	**Solar 015 PLUS**		**Solar 018-VT**	
	Serial Number	**30001 thru 30102**			
	Boom Type (One Piece)	1,690 mm (66.53 in)			
	Arm Type	850 mm (33.46 in)	1,100 mm (43.30 in)	850 mm (33.46 in)	1,100 mm (43.30 in)
	Bucket Type (SAE)	0.04 m^3			
A	Boom Offset	400 mm (15.75 in)			
B	Boom Offset	360 mm (14.17 in)			
C	Bucket Wide	452 mm (17.81 in)			
D	Boom Swing Angle	75°			
E	Boom Swing Angle	50°			
F	Tail Swing Radius	1,190 mm (46.85 in)			
G	Shipping Length	3,755 mm (147.83 in)		3,750 mm (147.64 in)	
H	Tumbler Distance	1,224 mm (48.19 in)			
I	Track Length	1,585 mm (62.40 in)			
J	Track Length (Dozer)	1,765 mm (69.46 in)		1,915 mm (75.39 in)	
K	Track Height	370 mm (14.57 in)		360 mm (14.17 in)	
L	Track Gauge	770 mm (30.31 in)		750 mm (29.53 in)~ 970 mm (38.19 in)	
M	Track Width	1,000 mm (39.37 in)		980 mm (38.58 in)~ 1,200 mm (47.24 in)	
N	Shoe Width	230 mm (9.06 in)			
O	Car Body Clearance	155 mm (6.10 in)		165 mm (6.50 in)	
P	Body Width	980 mm (38.58 in)			
Q	Shipping Width	1,000 mm (39.37 in)		980 mm (38.58 in)	
R	Dozer Width	1,000 mm (39.37 in)		980 mm (38.58 in)~ 1,200 mm (47.24 in)	
S	Dozer Height	235 mm (9.25 in)			
T	Shipping Height	2,325 mm (91.53 in)		2,390 mm (94.09 in)	
U	Shipping Height (Boom)	1,120 mm (44.09 in)	1,250 mm (49.21 in)	1,135 mm (44.69 in)	1,265 mm (49.80 in)

PREVIEW - YOUFIXTHIS.COM

Download full manual at youfixthis.com

DAEWOO
DAEWOO HEAVY INDUSTRIES & MACHINERY LTD.

GENERAL MAINTENANCE PROCEDURES

⚠ CAUTION!

Follow all safety recommendations and safe shop practices outlined in the front of this manual or those contained within this section.

Always use tools and equipment that is in good working order.

Use lifting and hoisting equipment capable of safely handling load.

Remember, that ultimately safety is your own personal responsibility.

MODEL	SERIAL NUMBER RANGE
ALL MODELS	ALL RANGES

PREVIEW - YOUFIXTHIS.COM

Copyright 2002 Daewoo

May 2002

Download full manual at youfixthis.com

GENERAL DESCRIPTION

Schematic(s) presented in this section are laid out on facing pages.

An overlapping edge has been taken into consideration so that a photocopy can be made and pasted together to make a complete schematic.

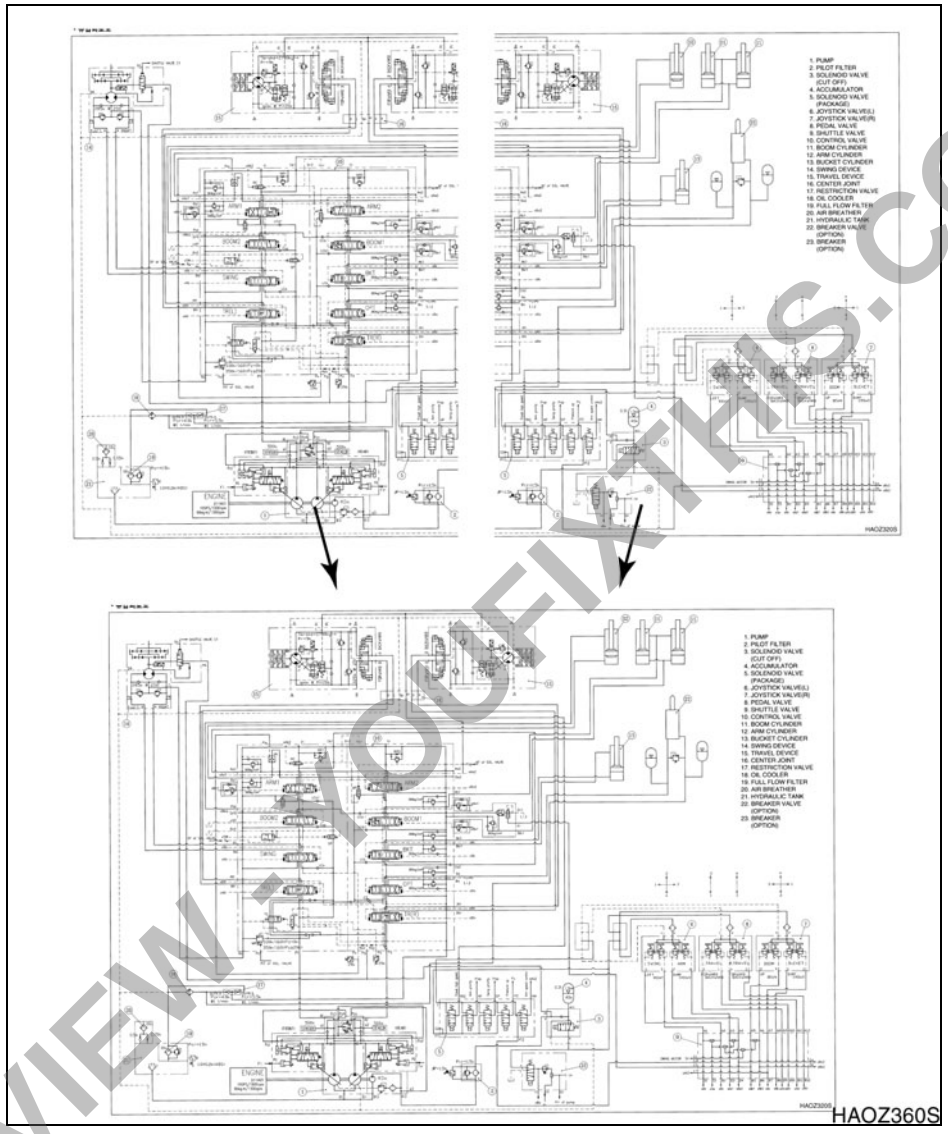

Figure 1

PREVIEW - YOUFIXTHIS.COM

Download full manual at youfixthis.com

Construction

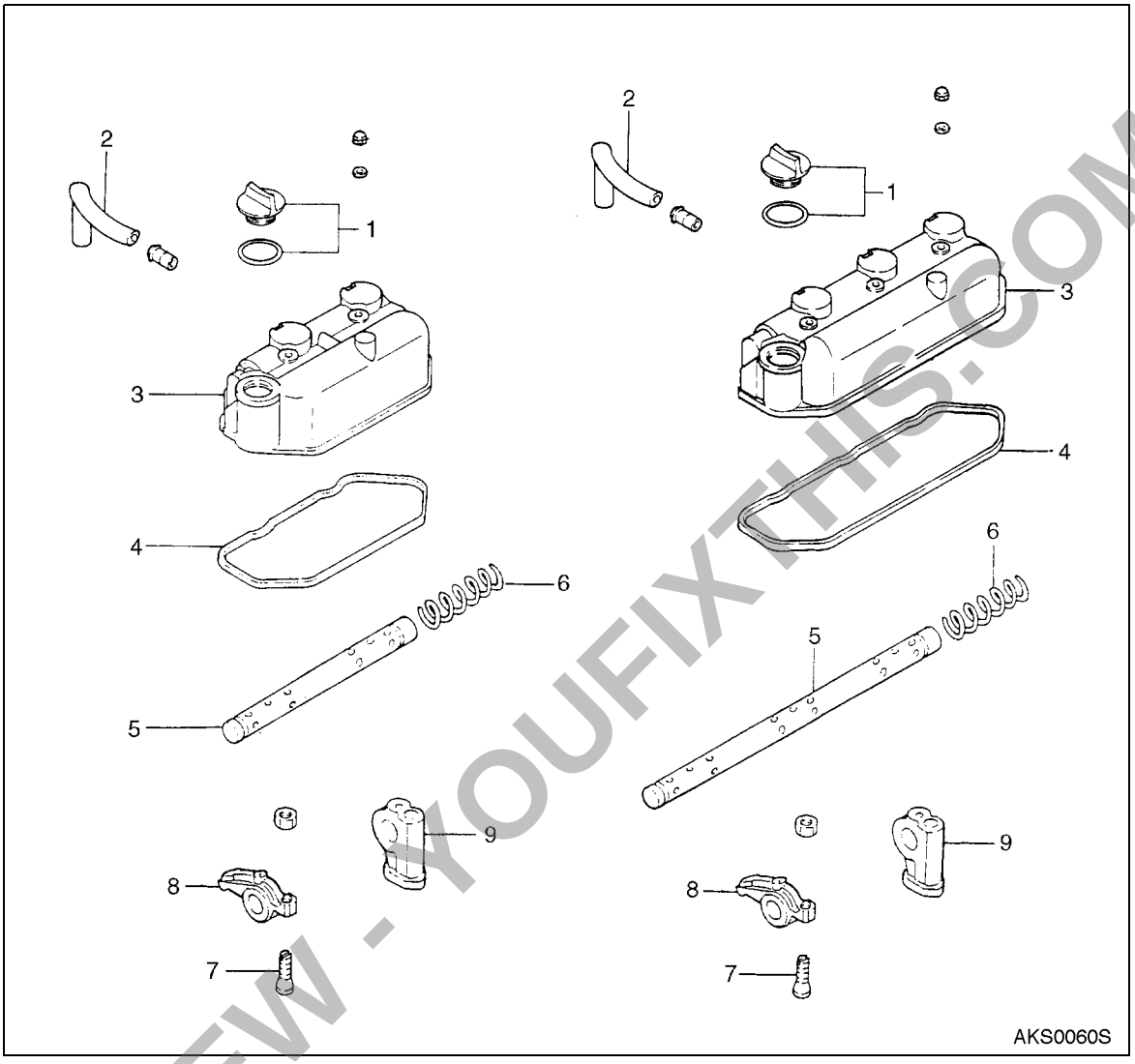

Figure 39 ROCKER SYSTEM COMPONENT PARTS

Reference Number	Description
1	Oil Fill Cap
2	Breather Hose
3	Rocker Cover
4	Rocker Cover Gasket
5	Rocker Shaft

Reference Number	Description
6	Rocker Spring
7	Adjustment Screw
8	Rocker Arm
9	Rocker Stay

PREVIEW - YOUFIXTHIS.COM

Download full manual at youfixthis.com

GENERAL DESCRIPTION

Schematic(s) presented in this section are laid out on facing pages.

An overlapping edge has been taken into consideration so that a photocopy can be made and pasted together to make a complete schematic.

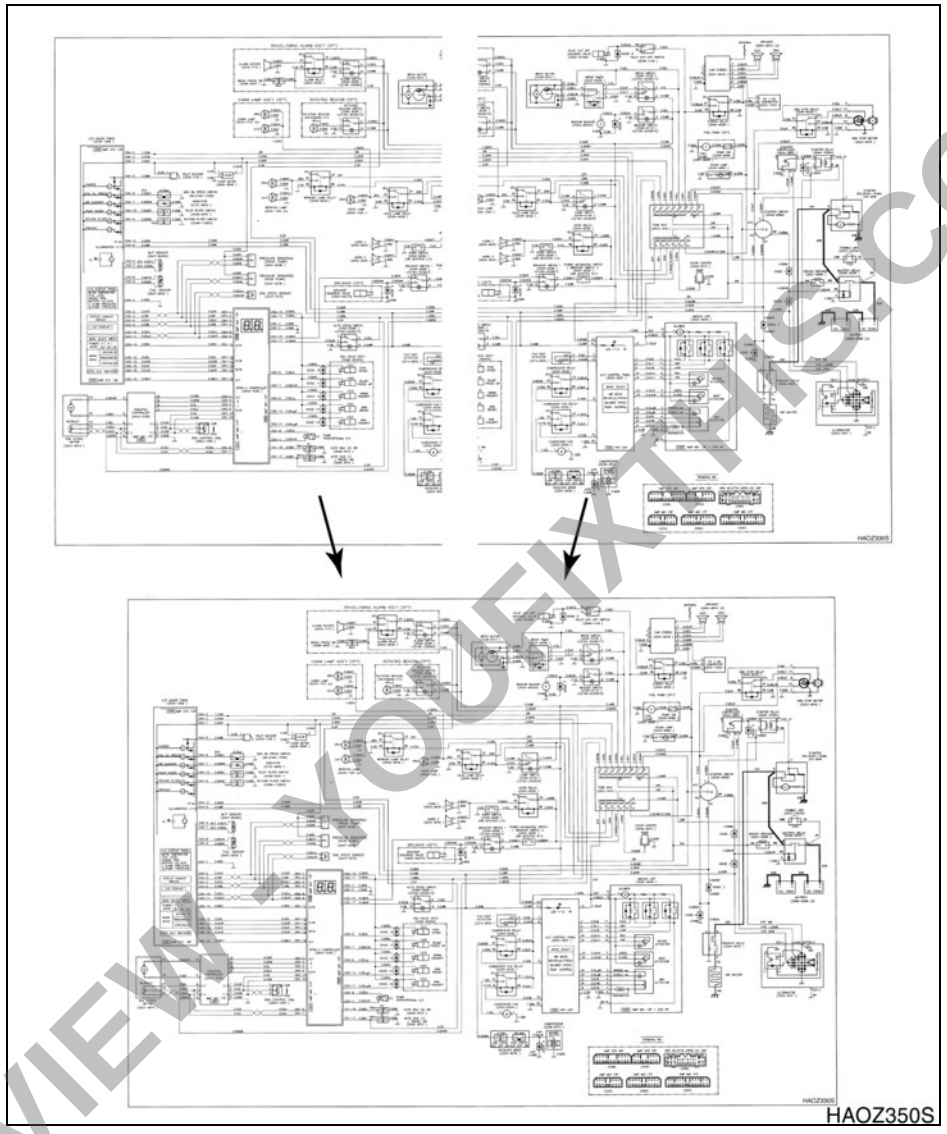

Figure 1

PREVIEW - YOUFIXTHIS.COM

Download full manual at youfixthis.com

TORQUE VALUES FOR STANDARD METRIC FASTENERS

NOTE: *The units for the torque values are kg•m (ft lb).*

Dia. x Pitch (mm)	Grade										
	3.6 (4A)	4.6 (4D)	4.8 (4S)	5.6 (5D)	5.8 (5S)	6.6 (6D)	6.8 (6S)	6.9 (6G)	8.8 (8G)	10.9 (10K)	12.9 (12K)
M5 x Std.	0.15 (1.08)	0.16 (1.15)	0.25 (1.80)	0.22 (1.59)	0.31 (2.24)	0.28 (2.02)	0.43 (3.11)	0.48 (3.47)	0.50 (3.61)	0.75 (5.42)	0.90 (6.50)
M6 x Std.	0.28 (2.02)	0.30 (2.16)	0.45 (3.25)	0.40 (2.89)	0.55 (3.97)	0.47 (3.39)	0.77 (5.56)	0.85 (6.14)	0.90 (6.50)	1.25 (9.04)	1.50 (10.84)
M7 x Std.	0.43 (3.11)	0.46 (3.32)	0.70 (5.06)	0.63 (4.55)	0.83 (6.00)	0.78 (5.64)	1.20 (8.67)	1.30 (9.40)	1.40 (10.12)	1.95 (14.10)	2.35 (16.99)
M8 x Std.	0.70 (5.06)	0.75 (5.42)	1.10 (7.95)	1.00 (7.23)	1.40 (10.12)	1.25 (9.04)	1.90 (13.74)	2.10 (15.18)	2.20 (15.91)	3.10 (22.42)	3.80 (27.48)
M8 x 1	0.73 (5.28)	0.80 (5.78)	1.20 (8.67)	1.00 (7.23)	1.50 (10.84)	1.35 (9.76)	2.10 (15.18)	2.30 (16.63)	2.40 (17.35)	3.35 (24.23)	4.10 (29.65)
M10 x Std.	1.35 (9.76)	1.40 (10.12)	2.20 (15.91)	1.90 (13.74)	2.70 (19.52)	2.35 (19.99)	3.70 (26.76)	4.20 (30.37)	4.40 (31.18)	6.20 (44.84)	7.20 (52.07)
M10 x 1	1.50 (10.84)	1.60 (11.57)	2.50 (18.08)	2.10 (15.18)	3.10 (22.42)	2.80 (20.25)	4.30 (31.10)	4.90 (35.44)	5.00 (36.16)	7.00 (50.63)	8.40 (60.75)
M12 x Std.	2.40 (17.35)	2.50 (18.08)	3.70 (26.76)	3.30 (23.86)	4.70 (33.99)	4.20 (30.37)	6.30 (45.56)	7.20 (52.07)	7.50 (54.24)	10.50 (75.94)	12.50 (90.41)
M12 x 1.5	2.55 (18.44)	2.70 (19.52)	4.00 (28.93)	3.50 (25.31)	5.00 (36.16)	4.50 (32.54)	6.80 (49.18)	7.70 (55.69)	8.00 (57.86)	11.20 (81.00)	13.40 (96.92)
M14 x Std.	3.70 (26.76)	3.90 (28.20)	6.00 (13.23)	5.20 (37.61)	7.50 (54.24)	7.00 (50.63)	10.00 (72.33)	11.50 (83.17)	12.00 (86.79)	17.00 (122.96)	20.00 (144.66)
M14 x 1.5	4.10 (29.65)	4.30 (31.10)	6.60 (47.73)	5.70 (41.22)	8.30 (60.03)	7.50 (54.24)	11.10 (80.28)	12.50 (90.41)	13.00 (94.02)	18.50 (11.26)	22.00 (158.12)
M16 x Std.	5.60 (40.50)	6.00 (43.39)	9.00 (65.09)	8.00 (57.86)	11.50 (83.17)	10.50 (75.94)	15.50 (112.11)	17.90 (129.47)	18.50 (133.81)	26.00 (188.05)	31.00 (224.22)
M16 x 1.5	6.20 (44.84)	6.50 (47.01)	9.70 (70.16)	8.60 (62.20)	12.50 (90.41)	11.30 (81.73)	17.00 (122.96)	19.50 (141.04)	20.00 (144.66)	28.00 (202.52)	35.50 (256.77)
M18 x Std.	7.80 (56.41)	8.30 (60.03)	12.50 (90.41)	11.00 (79.56)	16.00 (115.72)	14.50 (104.87)	21.00 (151.89)	27.50 (198.90)	28.50 (206.14)	41.00 (296.55)	43.00 (311.01)
M18 x 1.5	9.10 (65.82)	9.50 (68.71)	14.40 (104.15)	12.50 (90.41)	18.50 (133.81)	16.70 (120.79)	24.50 (177.20)	27.50 (198.90)	28.50 (206.14)	41.00 (296.55)	49.00 (354.41)
M20 x Std.	11.50 (83.17)	12.00 (86.79)	18.00 (130.19)	16.00 (115.72)	22.00 (159.12)	19.00 (137.42)	31.50 (227.83)	35.00 (253.15)	36.00 (260.38)	51.00 (368.88)	60.00 (433.98)
M20 x 1.5	12.80 (92.58)	13.50 (97.64)	20.50 (148.27)	18.00 (130.19)	25.00 (180.82)	22.50 (162.74)	35.00 (253.15)	39.50 (285.70)	41.00 (296.55)	58.00 (419.51)	68.00 (491.84)
M22 x Std.	15.50 (112.11)	16.00 (115.72)	24.50 (177.20)	21.00 (151.89)	30.00 (216.99)	26.00 (188.05)	42.00 (303.78)	46.00 (332.71)	49.00 (354.41)	67.00 (484.61)	75.00 (542.47)
M22 x 1.5	17.00 (122.96)	18.50 (133.81)	28.00 (202.52)	24.00 (173.59)	34.00 (245.92)	29.00 (209.75)	47.00 (339.95)	52.00 (44.76)	56.00 (405.04)	75.00 (542.47)	85.00 (614.80)
M24 x Std.	20.50 (148.27)	21.50 (155.50)	33.00 (238.68)	27.00 (195.29)	40.00 (289.32)	34.00 (245.92)	55.00 (397.81)	58.00 (419.51)	63.00 (455.67)	82.00 (593.10)	92.00 (655.43)
M24 x 1.5	23.00 (166.35)	35.00 (253.15)	37.00 (267.62)	31.00 (224.22)	45.00 (325.48)	38.00 (202.52)	61.00 (441.21)	67.00 (484.61)	74.00 (535.24)	93.00 (672.66)	103.00 (744.99)

PREVIEW - YOUFIXTHIS.COM

Download full manual at youfixthis.com

REMOVAL AND DISASSEMBLY

1. Refer to "Track Removal" section to remove the track assembly before proceeding to the following steps.
2. Remove spring pin (7, Figure 20) from guide (8).
3. Remove guide (8, Figure 20) from shaft (3).
4. Remove oil seal (6, Figure 20) using a screw driver.

   NOTE: *Once removed, the oil seal should not be reused.*

5. Remove retaining ring (5, Figure 20), bearing (4), and shaft (3).
6. Repeat steps 2 - 5 for other side.

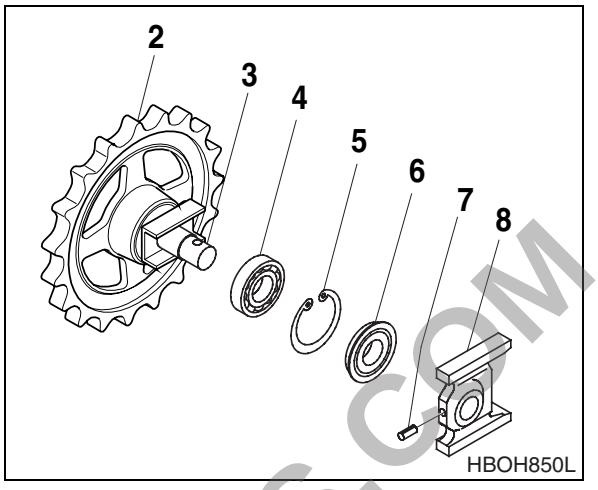

Figure 20

REASSEMBLY AND INSTALLATION

1. Degrease, clean and dry all parts before reassembly.
2. Insert shaft (3, Figure 20) into idler gear (2).
3. Assemble bearing (4, Figure 20) onto shaft (3) and install retaining ring (5)
4. Install new grease seal (6, Figure 20).
5. Install Shaft guide (8, Figure 20) and spring pin (7).
6. Repeat steps 1 - 5 for other side.
7. Refer to "Track Installation" section for track assembly installation procedures.

PREVIEW - YOUFIXTHIS.COM

Download full manual at youfixthis.com

DAEWOO
DAEWOO HEAVY INDUSTRIES & MACHINERY LTD.

TRACK EXCAVATOR SAFETY

⚠ CAUTION!

Follow all safety recommendations and safe shop practices outlined in the front of this manual or those contained within this section.

Always use tools and equipment that is in good working order.

Use lifting and hoisting equipment capable of safely handling load.

Remember, that ultimately safety is your own personal responsibility.

MODEL	SERIAL NUMBER RANGE
Solar 015	0001 and Up
Solar 015 PLUS	1001 thru 1157, 20001 thru 20065, 20066 thru 30000, 30001 and Up
Solar 018-VT	30001 and Up

PREVIEW - YOUFIXTHIS.COM

Copyright 2004 Daewoo

May 2004

Download full manual at youfixthis.com

Electrical System

Electrical System S0802210K
Electrical Schematic (Solar 015 PLUS / Solar 018-VT)..... S0892155K

Attachments

Boom and Arm..... S0902130K
Bucket.....S0904000

PREVIEW - YOUFIXTHIS.COM

Download full manual at youfixthis.com

ENGINE PERFORMANCE CURVES (ISO 3046 STANDARD)

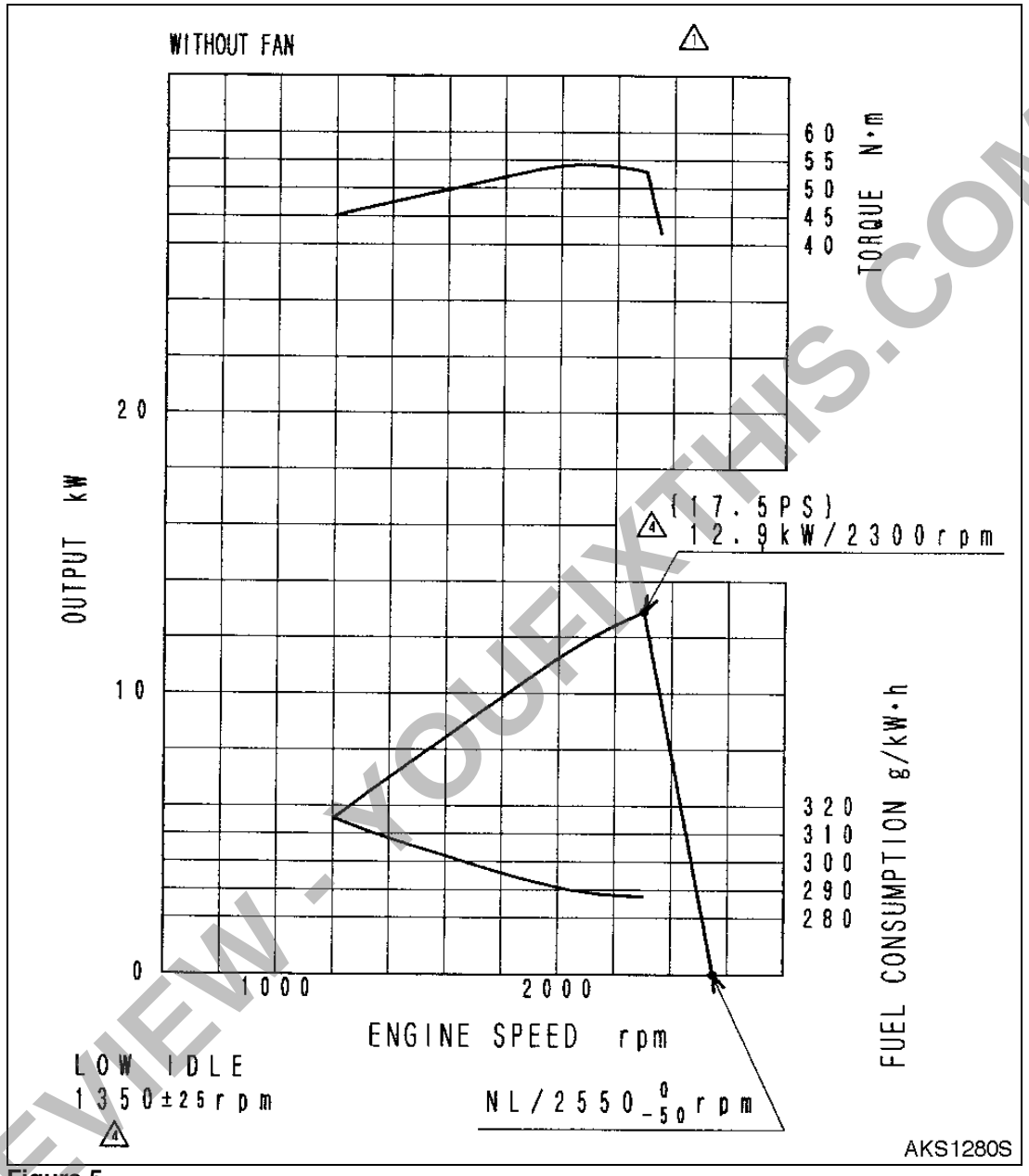

Figure 5

NOTE: *Barometric Pressure: 0.1 MPa (14.5 psi)*

Temperature: 25°C (77°F)

Cooling Fan: ∅ 290 mm (11.42 in) sucker fan

Alternator: 12 V, 40 amp

Relative Humidity: 30%

PREVIEW - YOUFIXTHIS.COM

Download full manual at youfixthis.com

4. Track tension adjustments are made through the grease fitting (1, Figure 4) in the middle of each side frame. Adding grease increases the length of the adjustment cylinder. The longer the adjustment cylinder, the greater the pressure on the tension spring pushing the track idler wheel outward.

5. If there isn't enough slack or clearance in the tracks and the adjustment is too tight, the idler wheel and adjusting cylinder can be retracted by bleeding off grease thru hole in adjustment cylinder.

6. After completing the tension adjustment, tighten the valve securely.

   NOTE: *Cartridge tightening torque: 6 - 9 kg• m (43 - 65 ft lb).*

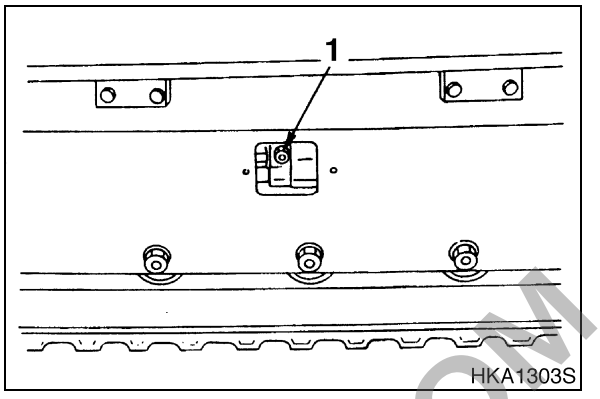

Figure 4

PREVIEW - YOUFIXTHIS.COM

Download full manual at youfixthis.com

7. If they do not coincide with each other, adjust thickness of injection pump mounting shim.

   Increasing or decreasing shim thickness by 0.1 mm (0.0039 in) causes real injection timing to vary about 1°.

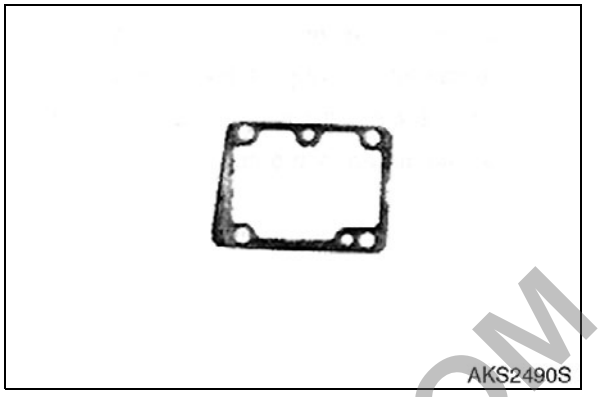

Figure 29 ADJUSTING SHIM THICKNESS

8. To remove injection pump, first disconnect injection pipes and fuel feed pipe from injection pump. Then, remove tie-rod cover and tie rod. Dismount pump assembly.

   Installation of pump is reversal of removal.

9. In dusty conditions or when engine is dirty, removal of a delivery valve may cause intrusion of dust into injection pump. Under such circumstances leave delivery valve installed and check injection timing using the following procedure:

   A. Remove tie-rod cover and disconnect tie rod from control rack.

   B. Set control rack to a midway position in working range. Disconnect injection pipe from No. 1 nozzle. Turn crankshaft gradually in direction of rotation until swelling of fuel is found at open end of injection pipe. This instant is real injection timing, which will come approximately 1° after standard injection timing.

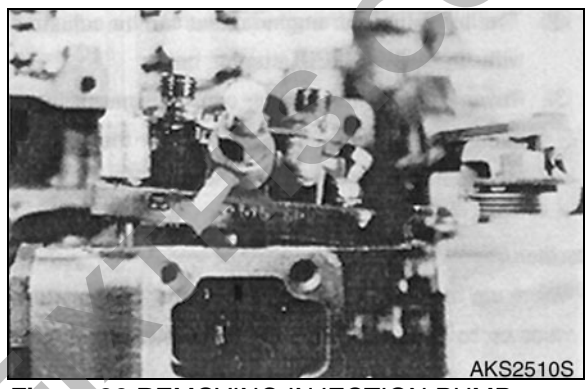

Figure 30 REMOVING INJECTION PUMP

RPM	Model	
	L2	L3
Up to 2000	BTDC 15°	¨
Over 2000 - Under 3800	BTDC 17°	¨
Over 3800	BTDC 19°	¨

Adjusting Engine Speeds

To adjust engine speed, remove cooling fan and install safety cover over fan to prevent getting hurt.

1. The upper limit of engine speed can be adjusted with HIGH-SPEED stopper bolt.

   This stopper bolt has been set properly and sealed at factory before shipping engine. Never tamper with seal unless it is necessary.

PREVIEW - YOUFIXTHIS.COM

Download full manual at youfixthis.com

Inspection

Inspect cylinder block. If it is found defective, repair or replace block.

Cylinder Bore (mm)		
Model	**Standard**	**Service Limit**
L2A, L3A	$65^{+0.03}_{-0}$ mm ($2.5591^{+0.0012}_{-0}$ in)	+0.20 mm (+0.0079 in)
L2C, L3C	$70^{+0.03}_{-0}$ mm ($2.7559^{+0.0012}_{-0}$ in)	+0.20 mm (+0.0079 in)
L2E, L3E	$76^{+0.03}_{-0}$ mm ($2.9921^{+0.0012}_{-0}$ in)	+0.20 mm (+0.0079 in)

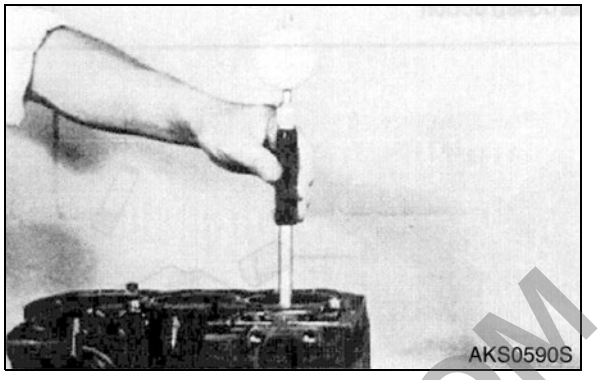

Figure 93 MEASURING CYLINDER BORE

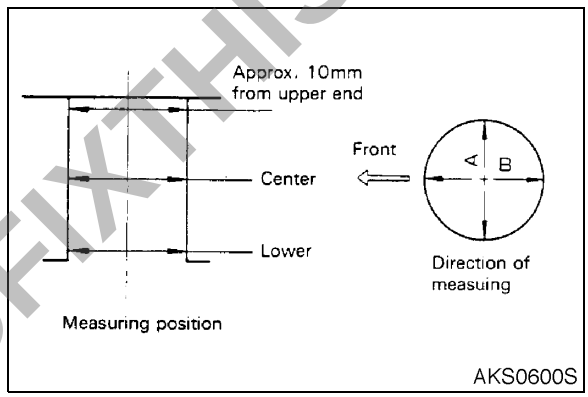

Figure 94 CYLINDER BORE MEASURING POSITIONS

PREVIEW - YOUFIXTHIS.COM

Download full manual at youfixthis.com

B. Checking regulator alone.

To judge whether a regulator is acceptable or not, check regulator for normal continuity by connecting circuit tester to lead wires as follows.

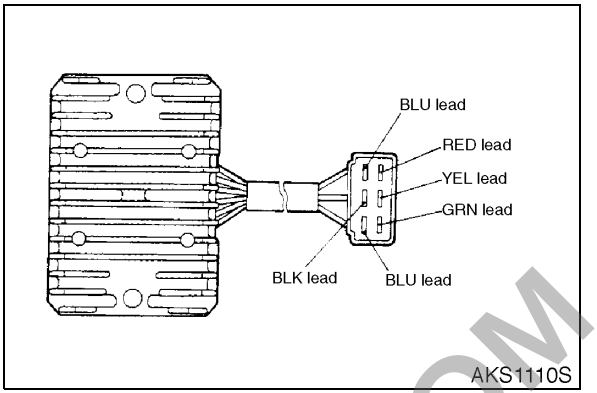

Figure 160 LEAD OUTLET COUPLER

Lead to Be Tested		Normal Measurement	If Abnormal Possible Cause of Regulator Trouble
Tester (+)	Tester (-)		
RED	BLU 1	Continuity	Broken diode
RED	BLU 2		
BLU 1	BLK		
BLU 2	BLK		
BLU 1	RED	noncontinuity	Shorted diode
BLU 2	RED		
BLK	BLU 1		Shorted diode or thyristor
BLK	BLU 2		

NOTE: *For testing, use circuit tester as an ohmmeter.*

3. Installation.

Heat affects the regulator and rectifier. Position them in a well ventilated place. Install the regulator in proper direction so that the outlet of leads from the body faces down.

GLOW PLUG

Removal and Installation

NOTE: *Glow plug tightening torque: 1.5 - 2.0 kg•m (11 - 14 ft lb).*

Inspection

Check for continuity between glow plug terminal and body. If plug is not conductive at all or shows a large resistance, replace plug.

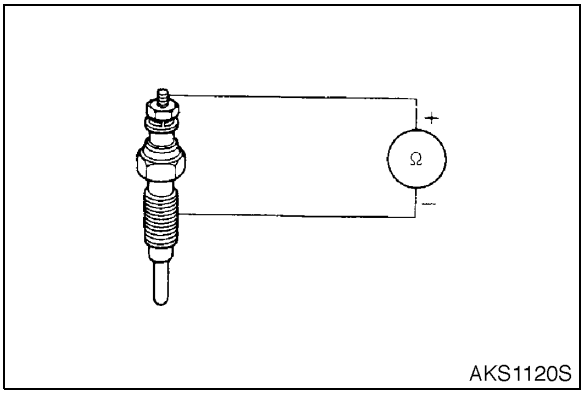

Figure 161 CHECKING GLOW PLUG

PREVIEW - YOUFIXTHIS.COM

Download full manual at youfixthis.com

REASSEMBLY

IMPORTANT

Replace any part that shows evidence of damage or excessive wear. Replacement of all O-rings and flexible seals is strongly recommended. Before starting the cylinder reassembly procedure, all parts should be thoroughly cleaned and dried, and/or prelubricated with clean hydraulic fluid. Prepare the work area beforehand to maintain cleanliness during the reassembly procedure.

NOTE: *Reassemble the subassemblies of the cylinder in the following order:*

1.Body of the cylinder

2.Piston rod

3.Piston assembly

4.Cylinder head assembly

1. Reassemble pin bushing to piston rod and body of cylinder by using a press (1, Figure 14).

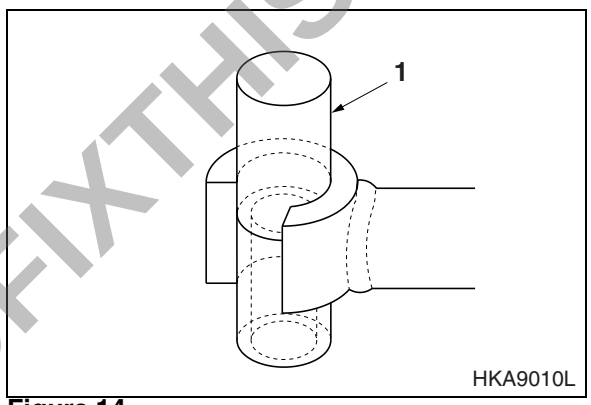

Figure 14

2. Lay the piston rod assembly on the work bench on top of wooden blocks (2, Figure 15).
3. Reassemble the backup ring, O-ring and the rod cover.

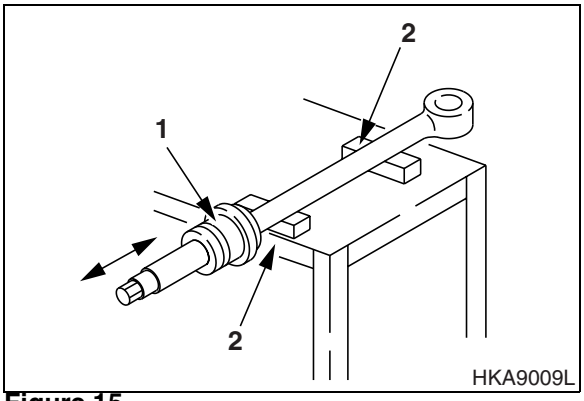

Figure 15

PREVIEW - YOUFIXTHIS.COM

Download full manual at youfixthis.com

10. Install control piston into body 2.

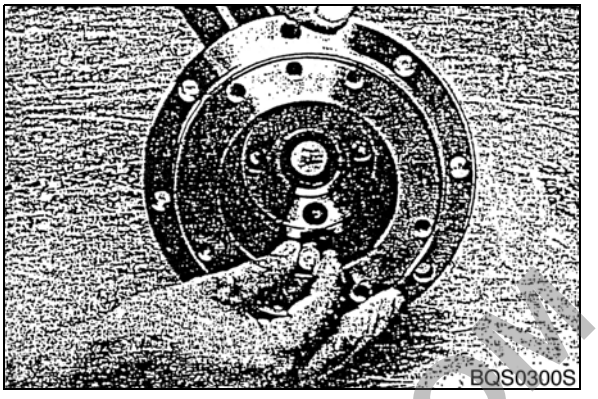

Figure 28

11. Install shaft into body 2.

    NOTE: *Be careful not to damage oil seal with shaft.*

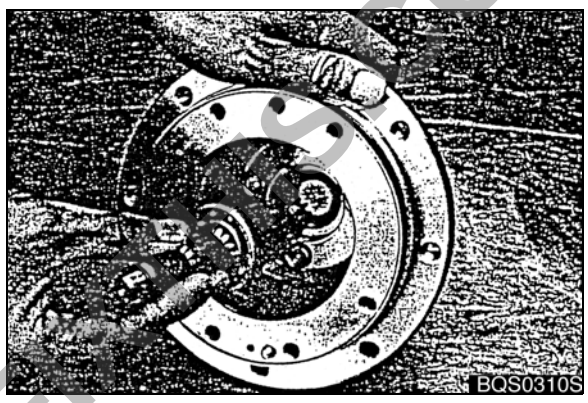

Figure 29

12. Install swash plate with ball into body 2.

    NOTE: *a. Apply oil to working face of swash plate.*

    b. Apply grease to back side of swash plate to keep it from falling out.

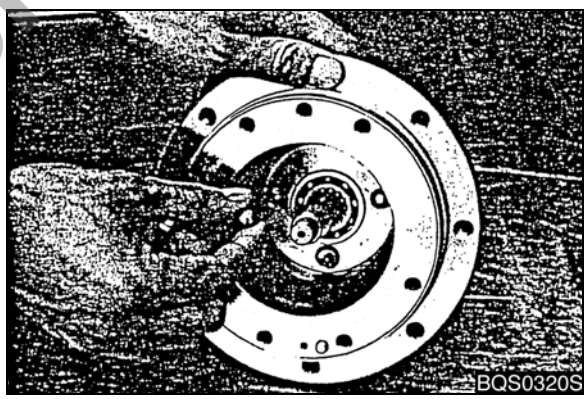

Figure 30

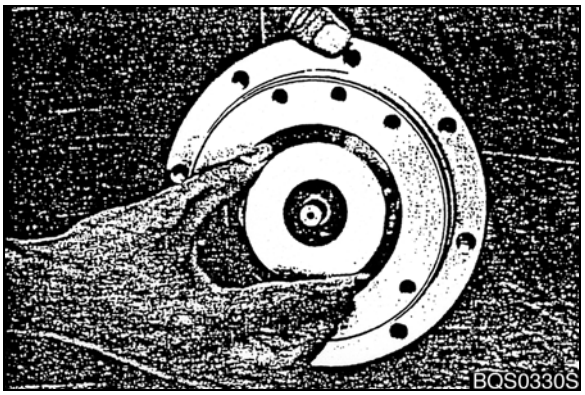

Figure 31

PREVIEW - YOUFIXTHIS.COM

Download full manual at youfixthis.com

CLEANING AND INSPECTION (WEAR LIMITS AND TOLERANCES)

For general cleaning and inspection procedures, refer to "General Maintenance Procedures" section.

Clean and completely dry parts to be inspected.

Also, check major parts well, and replace any parts with unusual wear exceeding allowance or harmful damage with new ones.

Replace any seal related parts, if they have manifest deformation or damage.

1. Piston assembly and cylinder block.

   Check exterior with naked eye.

   There must be no damage, scratch, excessive wear. (Particularly, on sliding parts.)

   Check clearance between piston outer diameter and block inner diameter.

   D-d ð 0.06 mm.

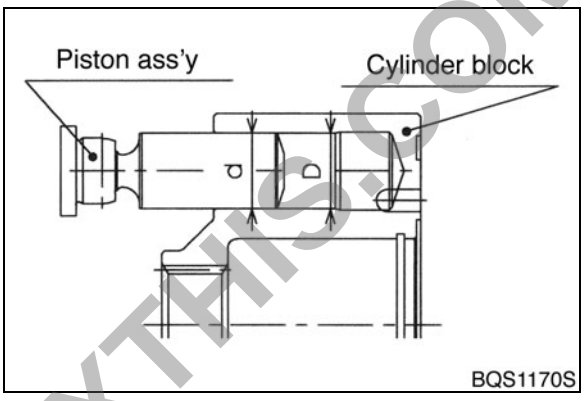

Figure 46

2. Piston shoe and piston.

   Check piston and shoe shaft direction for end play.

   Ɛ ð 0.2 mm.

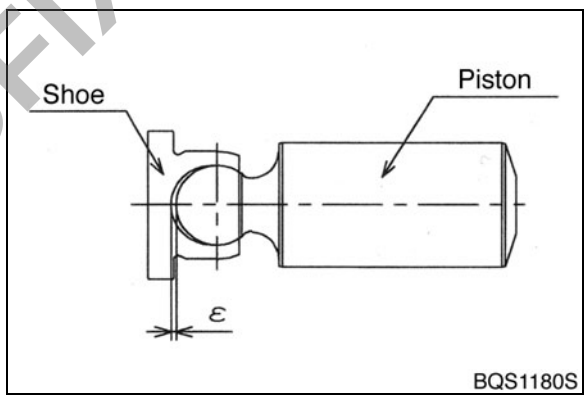

Figure 47

3. Shaft.

   Check oil seal mounting part for amount of wear.

   Amount of wear ð 0.025 mm.

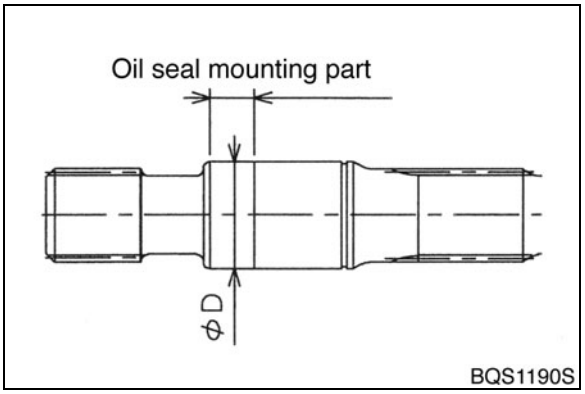

Figure 48

PREVIEW - YOUFIXTHIS.COM

Download full manual at youfixthis.com

PREVIEW ONLY

You're viewing 17 of 478 pages

The full manual includes:

- All 478 pages, complete
- Searchable PDF (find any keyword)
- No watermarks
- Instant download
- Print-ready quality

GET FULL MANUAL NOW

Daewoo Solar 015 PLUS, Solar 018-VT Shop Manual

Scan or click anywhere
youfixthis.com

Click anywhere on this page to get the full manual