2.3. SPECIFICATIONS

Items			SOLAR 030 Plus	SOLAR 035
Gross weight	Roof	Rubber shoe	2,740kg	3,140kg
		Steel shoe	2,780kg	3,184kg
	Cabin	Rubber shoe	2,860kg	3,240kg
		Steel shoe	2,900kg	3,284kg
Bucket capacity(full load in bulk)			0.07m³	0.09m³
Bucket width			445mm	525mm
Engine	Manufacturer and Model name		ISUZU 3LD1	ISUZU 3LD1
	Displacement		1,496 cc	1,496cc
	Rated engine power		24.5ps/1950 rpm	24.5ps/1950 rpm
Operating space	Max digging depth		2,590mm	3,125mm
	Vertical digging depth		1,665mm	2,300mm
	Max digging height		4,200mm	4,950mm
	Max dump height		2,865mm	3,465mm
	Max digging radius		4,460mm	5,120mm
	Min turning radius		Front:1,800mm/Rear:1,350mm	Front:2,060mm/Rear:1,400mm
	B/Swing angle	Roof	80°(left), 50°(right)	90°(left), 50°(right)
		Cabin	80°(left), 50°(right)	80°(left), 50°(right)
Performance	Travel speed	Rubber shoe	(Lo/Hi) 2.2/3.8 km/h	2.7/4.2 km/h
		Steel shoe	(Lo/Hi) 2.4/3.9 km/h	2.6/3.9 km/h
	Swing speed		8.3 rpm	9.4 rpm
	Gradeability		30 degrees	30 degrees
	Max digging force		2,110kg	2,300kg
Main data	Overall length		4,395mm	5,010mm
	Overall width		1,470mm	1,525mm
	Overall height	Roof	2,450mm	2,460mm
		Cabin	2,330mm	2,340mm
	Blade	Width x height	1,470 x 350mm	1,525 x 340mm
		Amount of movement	upper: 330, lower: 330	upper: 365, lower: 325
		Ground clearance	280mm	290mm

PREVIEW - YOUFIXTHIS.COM

Download full manual at youfixthis.com

2.8. INSPECTION AND MAINTENANCE

The amount of wear to each part varies according to whether or not the periodic maintenance is carried out, machine operating skill, working conditions, quality of lubricants in service, working environment, and amount of excavation. Operators are required to determine service intervals for their excavators based on engine conditions, hourmeter readings, extent of wear of each component, hydraulic system condition, and their own experience and related data.

2.8.1. How to perform inspection and maintenance

Check points	Service intervals(hours)					
	7 hours	50 hours	100 hours	250 hours	500 hours	1,000hours
Engine oil pan	Check & Replenish	First oil change		Change oil		Clean
Engine oil filter		First replacement		Replace		
Fuel filter			Check & Clean		Replace	
Intake/Exhaust valve clearance		Check & Correct			Check & Adjust	
Fan belt clearance	Check & Adjust					
Fuel tank		Drain			Replace filter	
Coolant (Reservoir tank)		Check & Clean				
Coolant (Radiator)		Check				
Air cleaner element			Check & Clean		Replace	
Hydraulic oil tank	Check & Replenish			Drain		Replace filter
Return filter (hydraulic oil)			First replacement		Replace	
Hydraulic oil suction filter			First replacement		Replace	
Swivel bearing (grease)		Check & Grease			Replace	
Crawler tension adjustment	Check & Adjust					
Storage battery		Check				
Bolt looseness	Check & Correct					
Reduction gear oil				First change		Change
Electric devices	Check					
Leaks	Check					

PREVIEW - YOUFIXTHIS.COM

Download full manual at youfixthis.com

2.9. HYDRAULIC LINE DIAGRAM

- **SOLAR 030 Plus**

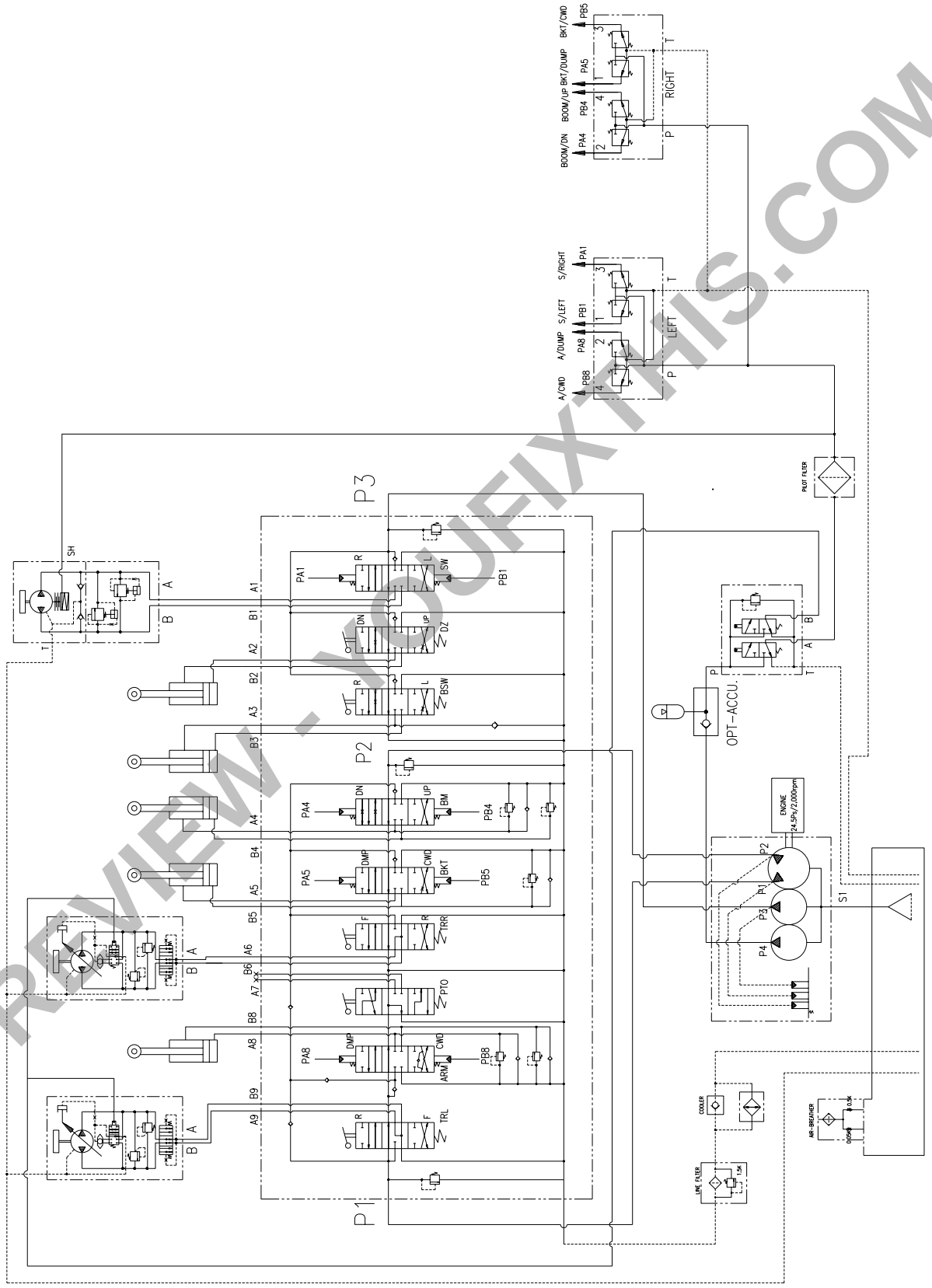

PREVIEW - YOUFIXTHIS.COM

Download full manual at youfixthis.com

5.2. CONSTRUCTION

- **SOLAR 030 Plus**

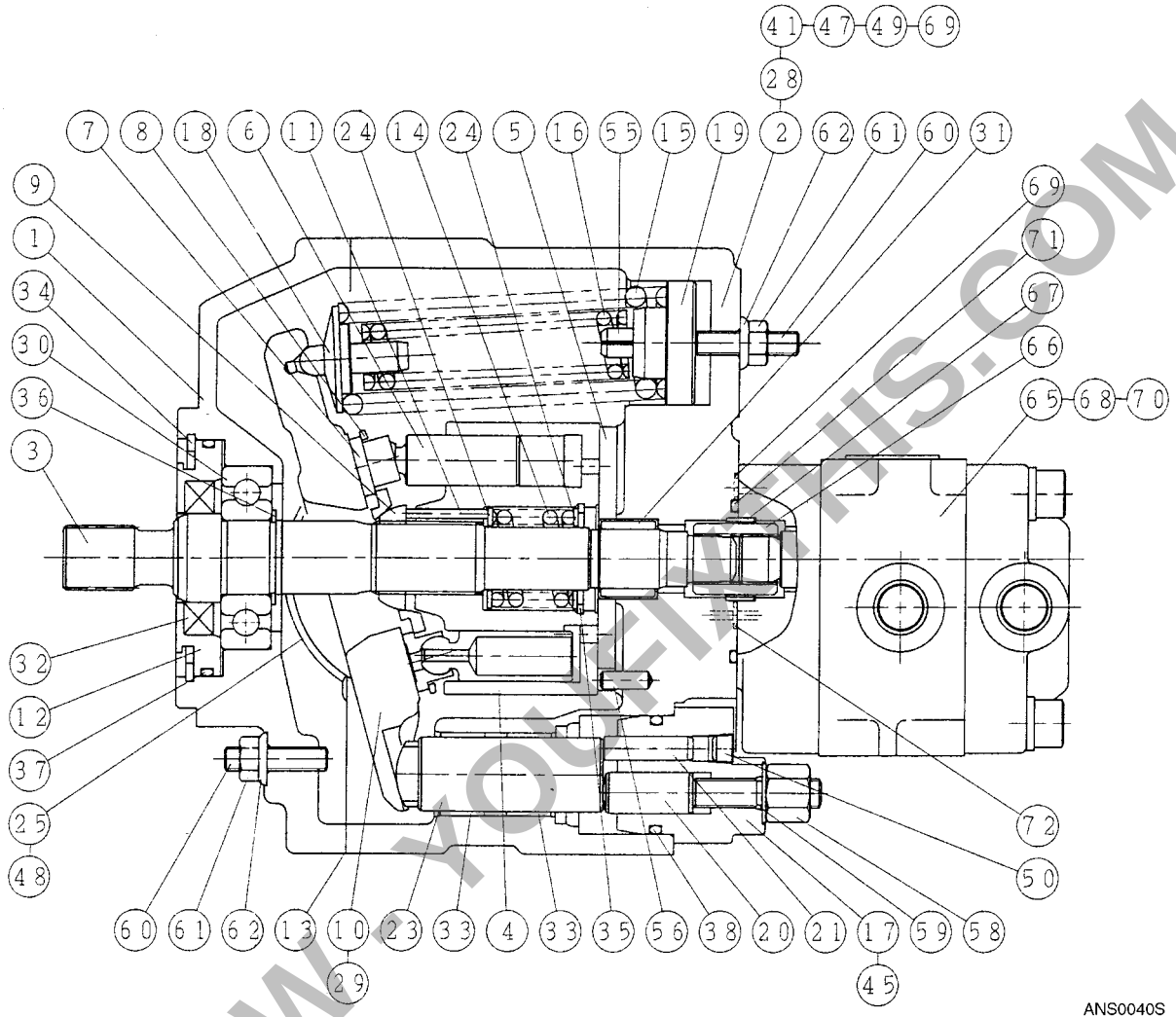

1. Body S
2. Body H
3. Shaft
4. Cylinder barrel
5. Valve plate
6. Piston
7. Shoe
8. Shoe holder
9. Barrel holder
10. Swash plate
11. Neddle
12. Seal holder
13. Packing
14. Spring C
15. Spring T1
16. Spring T2
17. Sleeve
18. Spring holder
19. Spring guide
20. Rod P
21. Rod G
23. Control piston
24. Retainer
25.Thrust bush
28 & 29. Choke
30. Ball bearing
31. Needle bearing
32. Oil seal
33. Sliding shaft
34 & 35 & 36. Snap ring
37 & 38 & 39 & 41. O-ring
44 & 45. Hex. socket bolt
47. Parallel pin
48. Conical small screw
49 & 50. Hex. socket plug
51. Plug
52. Spring washer
55 & 56. Spring pin
58. Bolt ass'y
59. O-ring
60. Hex. socket set screw
61. Hex. nut
62. Seal washer
65. Gear pump
66. Coupling
67. Collar
68. Hex. bolt
69. O-ring
70. Washer
71 & 72. O-ring

PREVIEW - YOUFIXTHIS.COM
Download full manual at youfixthis.com

2.8.11. Standard tightening torque

- **Bolt and nut tightening torque table**

Types of bolts and nuts / Nominal designation	4T	7T	9T
	SS41	S40C, S45C	SCr4
M6	0.80~0.95 (7.8~9.3)	1.00~1.15 (9.8~11.3)	1.25~1.45 (12.3~14.2)
M8	1.80~2.10 (17.7~20.6)	2.40~2.80 (23.5~27.5)	3.00~3.50 (29.4~34.3)
M10	4.00~4.60 (39.2~45.1)	4.90~5.70 (48.0~55.9)	6.20~7.20 (60.8~70.6)
M12	6.40~7.40 (62.8~72.6)	7.90~9.20 (77.5~90.2)	10.50~12.00 (103.0~117.7)
M14	11.00~12.80 (107.9~125.5)	12.60~15.00 (123.6~147.1)	17.00~20.00 (166.7~196.1)
M16	17.00~19.50 (166.7~191.2)	20.00~23.00 (196.1~225.6)	26.50~31.00 (259.9~304.0)
M18	25.00~29.00 (245.2~284.4)	28.00~32.50 (274.6~318.7)	35.00~41.00 (343.2~402.1)
M20	34.00~40.00 (333.4~392.2)	37.50~44.00 (367.7~431.5)	50.00~58.00 (490.3~568.8

- **Adaptor tightening torque**

Nominal designation	Tightening torque(kg•m)
PT1/4	3.5~4.5
PT3/8	4.5~5.5
PT1/2	6.5~7.5
PT3/4	8.5~9.5

Nominal designation	Tightening torque(kg•m)
PT1/4	6~8
PT3/8	
PT1/2	
PT3/4	9~11
PT1	12~14

NOTE: Torque represents the force required to tighten a bolt, e.g., if you grip a 1m long spanner and turn its handle with a force of 12kg, you will obtain 12kg• m(1m x 12kg). To produce a torque of 12kg• m using a 25cm long spanner, a force of 48kg is necessary as follows:

0.25 x (X kg) = 12kg• m
12 x 1/0.25= 48kg

PREVIEW - YOUFIXTHIS.COM
Download full manual at youfixthis.com

5.3. PUMP REMOVAL AND INSTALLATION

5.3.1. Pump removal

1. Remove nipples, fittings, and hoses from the pump, and cover both ends of each hose in order to prevent dust and other foreign matters from entering the hoses.
2. Remove the pump mounting bolt and spring washer(1,2).
3. Remove the pump flange(3) from the engine.

5.3.2. Pump installation

1. Install the pump to the pump flange(3).
   At this time, ensure that the pump shaft spline should be correctly installed into the coupling boss.

- **Pump installation precautions**
  - Ensure that the coupling (5) should not be warped when installing the coupling boss 4.
  - Make sure that the coupling boss spline has not been deformed.

Item No.	Part name	Tightening torque
6	Bolt (M10 x 30L)	5.2 kg·m
7	Bolt (M10 x 25L)	6.5 kg·m
8	Nut (M10)	6.5 kg·m

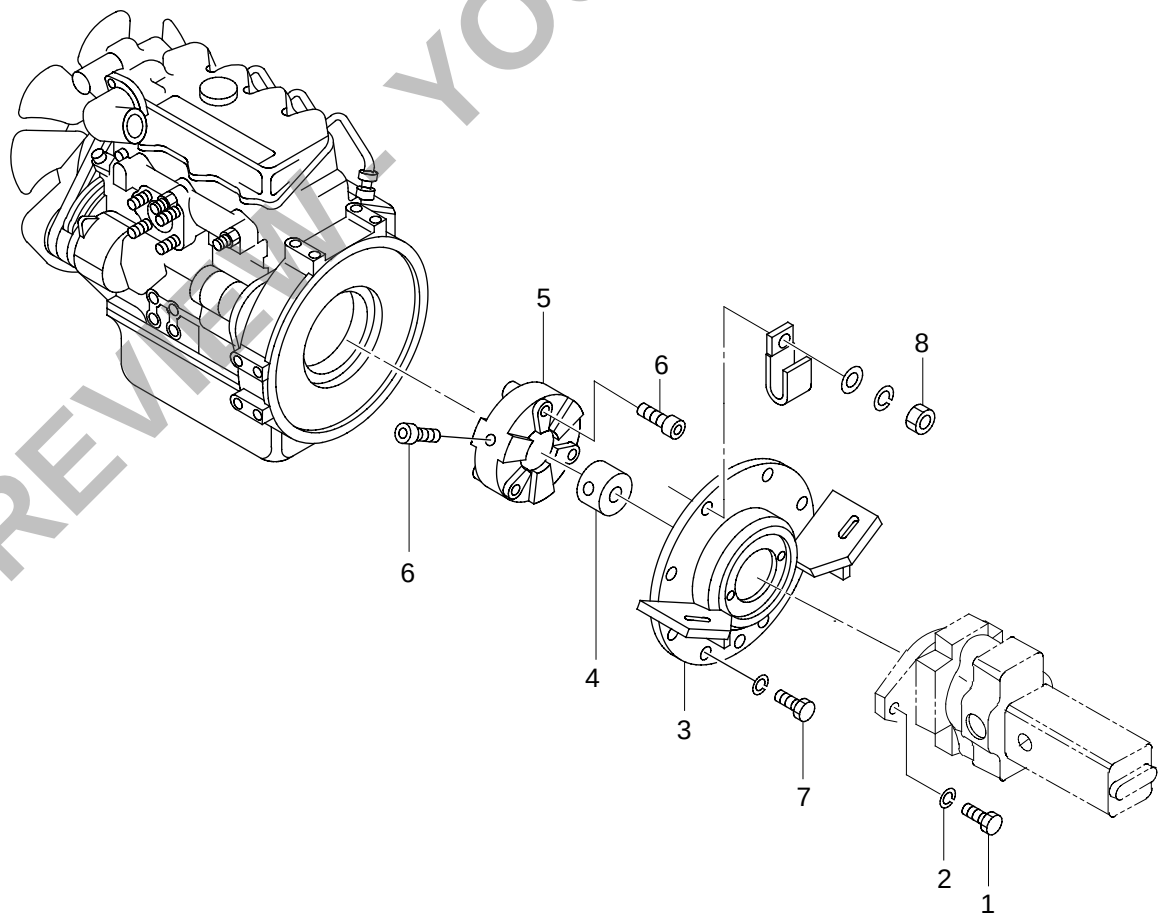

PREVIEW. YOUFIXTHIS.COM

Download full manual at youfixthis.com

20.2. TROUBLESHOOTING

20.2.1. STARTER

Complaints	Causes	Corrections
Pinion would not slide out if the starter switch is ON.	• Open wiring, bad contact of battery with switch terminal • Spline which is engaged with the armature shaft pinion had been worn causing the pinion to fail to operate. • Plunger of magnetic switch malfunction, or coil short or open.	Correct Correct spline. Correct• Replace
Pinion engages with ring gear, but starter does not rotate.	• Open cable which connects the battery and magnetic switch • Improper connection of connecting wires which connect the magnetic switch and motor terminal • Improper engagement of pinion with ring gear • Excessive wear of brush, and contact of brush with spring • Commutator contaminated • Armature and field coil defective • Improper tightening of field coil and brush contact surface • Contractor improperly contacted • Contractor contact surface not smooth	Tighten or replace Tighten or replace Correct teeth. Correct• Replace Correct Correct• Replace Correct Correct Correct
Pinion rotates at high speed before engaging with the ring gear.	• Plunger cap improperly adjusted	Adjust
Pinion gear is engaged with ring gear and the starter rotates, but the engine does not rotate.	• Overrun clutch defective	Replace
Starter would not stop although the switch is turned to OFF after starting.	• Inside of switch short • Connector missing	Replace switch. Replace

PREVIEW - YOUFIXTHIS.COM

Download full manual at youfixthis.com

TABLE OF CONTENTS

1. SAFETY 1

1.1. Safety Information
1.2. Safety Messages
1.3. Safe Operation
1.4 Locatoion of Safety Labels

2. GENERAL INFORMATION 23

2.1. Excavator Major Components
2.2. Excavator External View and Operating Space
2.3. Specification
2.4. Weight of Major Attachments and Components
2.5. Excavator Identification Number
2.6. Grease Supply Points and Locations
2.7. Recommended Oils and Lubricants
2.8. Inspection and Maintenance
2.9. Hydraulic Line Diagram

3. WORKING ATTACHMENTS 40

3.1. Maintenance Standards
3.2. Inspection and Correction

4. ENGINE 47

4.1. Engine Specifications
4.2. Engine Performance Curve
4.3. Emgine Number Location
4.4. Engine RPM Standards

5. MAIN PUMP 50

5.1. External Views
5.2. Construction
5.3. Pump Removal and Installation
5.4. Hydraulic Pump Performance Test

6. HYDRAULIC OIL FILTER 57

6.1. Piping Diagram
6.2. Hydraulic Oil Filter
6.3. Maintenance Procedure

7. CONTROL VALVE 63

7.1. Specifications
7.2. Construction
7.3. Disassembly and Reassembly
7.4. Construction of Each Valve
7.5. Cautions when Handlings

8. SWING MOTOR 76

8.1. Specifications
8.2. Construction
8.3. Principles of Operation
8.4. Inspection and Adjustment
8.5. Maintenance Standards

9. TRAVEL MOTOR 85

9.1. Specifications
9.2. Construction
9.3. Principles of Operation
9.4. Care
9.5. Running Speed

PREVIEW - YOUFIXTHIS.COM

Download full manual at youfixthis.com

1. SAFETY

1.1. SAFETY INFORMATION

1) Safety Information Location

Basic safety information and rules are compiled in this section (Section 1) of the manual. Throughout the rest of the manual, safety information is identified by three levels of hazard: DANGER, WARNING, and CAUTION. These hazard levels are explained below, under "1.2 SAFETY MESSAGES". Safety information is also included on safety labels on the machine. Read and understand all safety precautions both in the manual and on the machine.

2) Heavy Equipment Operation

Make sure that operators are qualified and that they hold a heavy equipment operator's license, if required.

1.2. SAFETY MESSAGES

1) Safety Hazard Levels

The following information defines each hazard level.



⚠ **DANGER :** This message indicates an extreme hazard that can result in serious personal injury or death to you or other persons if the machine is handled improperly or proper precautions are not taken.

⚠ **WARNING :** This message indicates a hazard that can result in serious personal injury or death to you or other persons, or cause minor injury or material damage if the machine is handled improperly or proper precautions are not taken.

⚠ **CAUTION :** This message identifies a hazard that is not likely to cause personal injury but may cause property loss or result in machine damage if the machine is handled improperly or proper precautions are not taken.

IMPORTANT : This message is used when the machine may be damaged or its service life may be shortened if the machine is handled improperly.

PREVIEW - YOUFIXTHIS.COM

Download full manual at youfixthis.com

10. HYDRAULIC CYLINDER 98

10.1. Construction
10.2. Disassembly
10.3. Assembly

11. SWIVEL JOINT 105

11.1. Specifications
11.2. Construction, Disassembly, and Reassembly

12. JOY STICK 109

12.1. Specifications
12.2. Principles of Operation
12.3. Constrction

13. SOLENOID VALVE 113

13.1. Specifications
13.2. Construction
13.3. Operation
13.4. Construction

14. CRAWLERS 118

14.1. Specifications and Construction
14.2. Disassembly and Reassembly
14.3. Maintenance Standards

15. IDLER 124

15.1. Construction
15.2. Disassembly and Reassembly
15.3. Maintenance Standards

16. TRACK TENSION ADJUSTING CYLINDER 127

16.1. Construction
16.2. Spring Specifications
16.3. Disassembly and Reassembly

17. TRACK ROLLER 130

17.2. Disassembly and Reassembly

18. SPROCKET 133

18.1. Disassembly and Reassembly
18.2. Maintenance Standards

19. CRAWLER REPLACEMENT PROCEDURE 135

19.1. Steel Crawler Mounting Procedure
19.2. Replacement of Steel Crawlers with Rubber Crawlers

20. ELECTRICAL DEVICE 137

20.1. Electrical Circuit Diagram
20.2. Troubleshooting

- **ENGINE** E-1

PREVIEW - YOUFIXTHIS.COM

Download full manual at youfixthis.com

9.2. CONSTRUCTION

- **SOLAR 030 Plus**

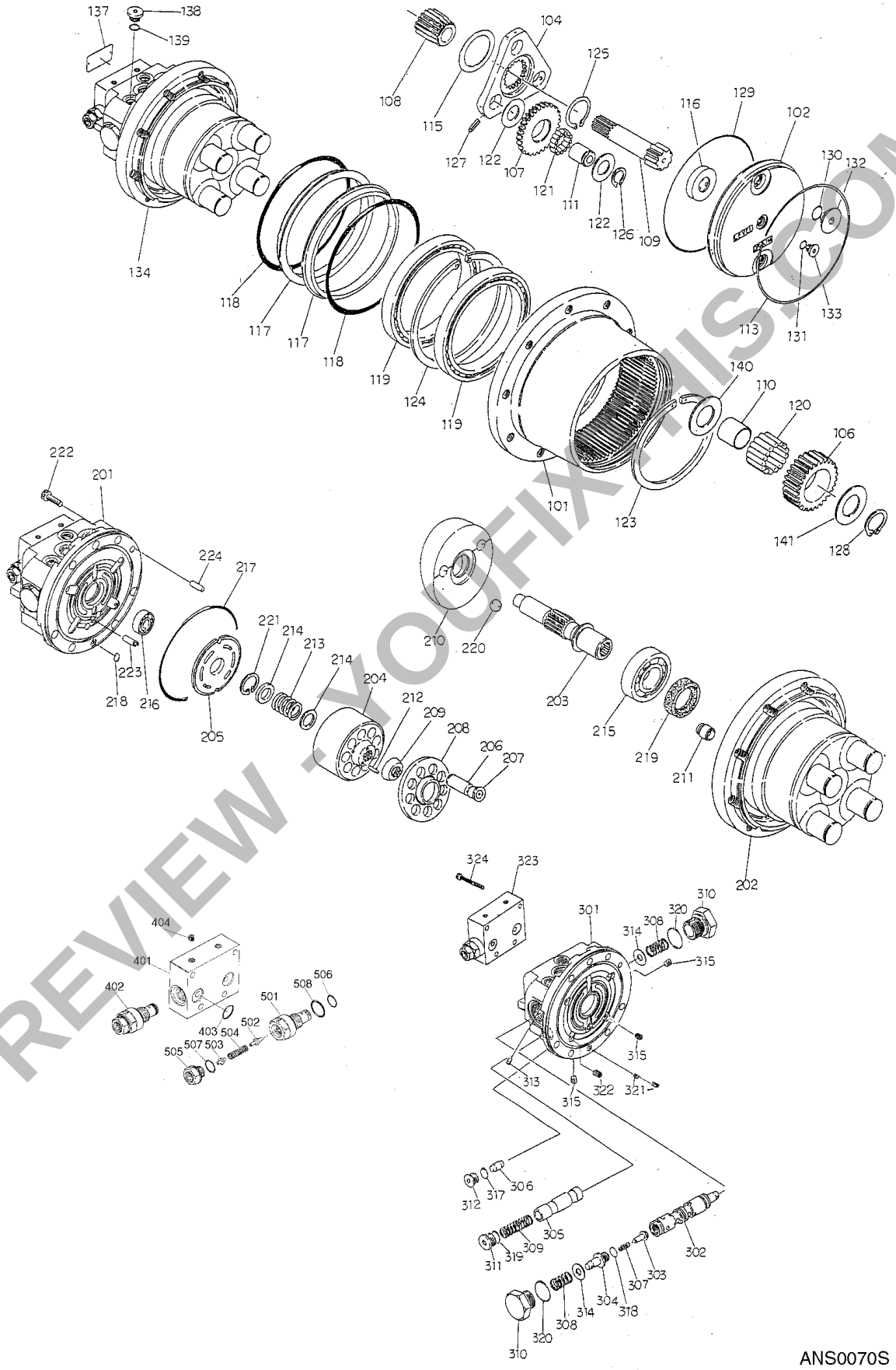

ANS0070S

PREVIEW - YOUFIXTHIS.COM

Download full manual at youfixthis.com

DISASSEMBLY

1. EXTERNAL PARTS (Left-hand side)

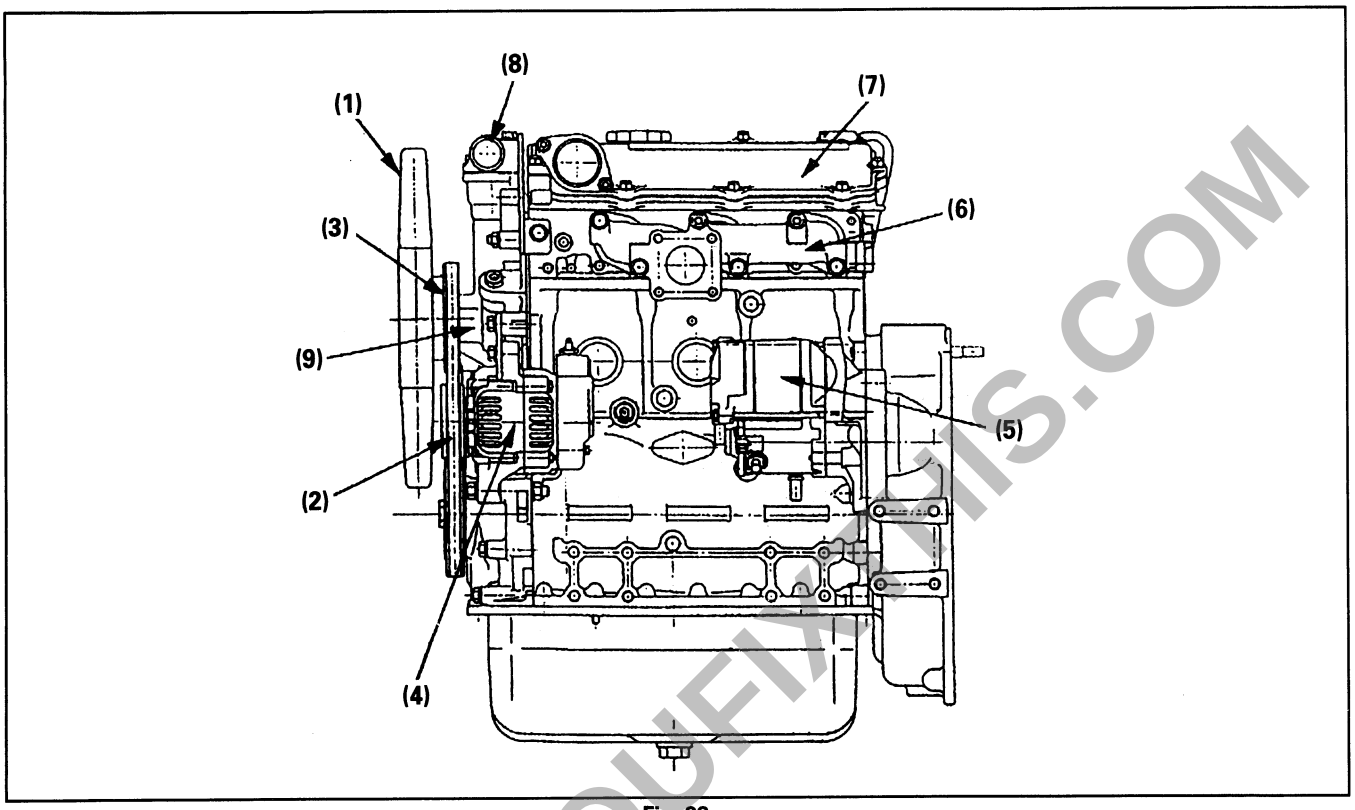

Fig. 38

(1) Cooling fan and spacer
(2) Fan belt
(3) Fan pulley
(4) Generator
(5) Starter
(6) Exhaust manifold and gasket
(7) Cylinder head cover and air intake pipe
(8) Water outlet pipe and thermostat
(9) Water pump assembly

PREVIEW - YOUFIXTHIS.COM

Download full manual at youfixthis.com

PREVIEW ONLY

You're viewing 12 of 269 pages

The full manual includes:

- All 269 pages, complete
- Searchable PDF (find any keyword)
- No watermarks
- Instant download
- Print-ready quality

GET FULL MANUAL NOW

Daewoo Solar 030 Plus, Solar 035, 035 Shop Manual

Scan or click anywhere
youfixthis.com

Click anywhere on this page to get the full manual