Solar 130LC-V

Shop Manual

2023-7117E

Serial Number 0001 and Up

PREVIEW - YOUFIXTHIS.COM

Daewoo reserves the right to improve our products in a continuing process to provide the best possible product to the market place. These improvements can be implemented at any time with no obligation to change materials on previously sold products. It is recommended that consumers periodically contact their distributors for recent documentation on purchased equipment.

This documentation may include attachments and optional equipment that is not available in your machine's package. Please call your distributor for additional items that you may require.

Illustrations used throughout this manual are used only as a representation of the actual piece of equipment, and may vary from the actual item.

Download full manual at youfixthis.com

TABLE OF CONTENTS

Safety

Track Excavator Safety.....S0102000

Specifications

Specifications for Solar 130LC-V.....S0206000

General Maintenance

General Maintenance Procedures.....S0302000

Standard Torques.....S0309000

Upper Structure

Cab.....S0402000

Counterweight.....S0403000

Fuel Tank.....S0405000

Swing Bearing.....S0407000

Swing Reduction Gearbox.....S0408020

Lower Structure and Chassis

Track Assembly.....S0505050

Engine and Drive Train

Air-Conditioner.....S0605010

Hydraulics

Hydraulic System Troubleshooting, Testing and Adjustment.....S0702050

Accumulator.....S0703000

Center Joint (Swivel).....S0704020

Cylinders.....S0705000

Swing Motor.....S0707220

Travel Motor (With Gearbox).....S0707340

PREVIEW - YOUFIXTHIS.COM

Download full manual at youfixthis.com

TRACK EXCAVATOR SAFETY

⚠ CAUTION!

Follow all safety recommendations and safe shop practices outlined in the front of this manual or those contained within this section.

Always use tools and equipment that is in good working order.

Use lifting and hoisting equipment capable of safely handling load.

Remember, that ultimately safety is your own personal responsibility.

MODEL	SERIAL NUMBER RANGE
Solar 130LC-V	0001 and Up
Solar 220LC-V	0001 and Up
Solar 220N-V	1001 and Up
Solar 290LC-V	0001 and Up
Solar 330LC-V	1001 and Up
Solar 400LC-V	1001 and Up

PREVIEW - YOUFIXTHIS.COM

Copyright 1999 Daewoo

March 1999

Download full manual at youfixthis.com

SPECIFICATIONS FOR SOLAR 130LC-V

⚠ CAUTION!

Follow all safety recommendations and safe shop practices outlined in the front of this manual or those contained within this section.

Always use tools and equipment that is in good working order.

Use lifting and hoisting equipment capable of safely handling load.

Remember, that ultimately safety is your own personal responsibility.

MODEL	SERIAL NUMBER RANGE
Solar 130LC-V	0001 and UP

PREVIEW - YOUFIXTHIS.COM

Copyright 1998 Daewoo

September 1998

Download full manual at youfixthis.com

GENERAL MAINTENANCE PROCEDURES

⚠ CAUTION!
Follow all safety recommendations and safe shop practices outlined in the front of this manual or those contained within this section. **Always use tools and equipment that is in good working order.** **Use lifting and hoisting equipment capable of safely handling load.** **Remember, that ultimately safety is your own personal responsibility.**

MODEL	SERIAL NUMBER RANGE
ALL MODELS	ALL RANGES

PREVIEW - YOUFIXTHIS.COM

Copyright 1998 Daewoo

September 1998

Download full manual at youfixthis.com

STANDARD TORQUES

⚠ CAUTION!

Follow all safety recommendations and safe shop practices outlined in the front of this manual or those contained within this section.

Always use tools and equipment that is in good working order.

Use lifting and hoisting equipment capable of safely handling load.

Remember, that ultimately safety is your own personal responsibility.

MODEL	SERIAL NUMBER RANGE
ALL MODELS	ALL RANGES

PREVIEW - YOUFIXTHIS.COM

Copyright 1998 Daewoo

September 1998

Download full manual at youfixthis.com

GENERAL DESCRIPTION

Schematic(s) presented in this section are laid out on facing pages.

An overlapping edge has been taken into consideration so that a photocopy can be made and pasted together to make a complete schematic.

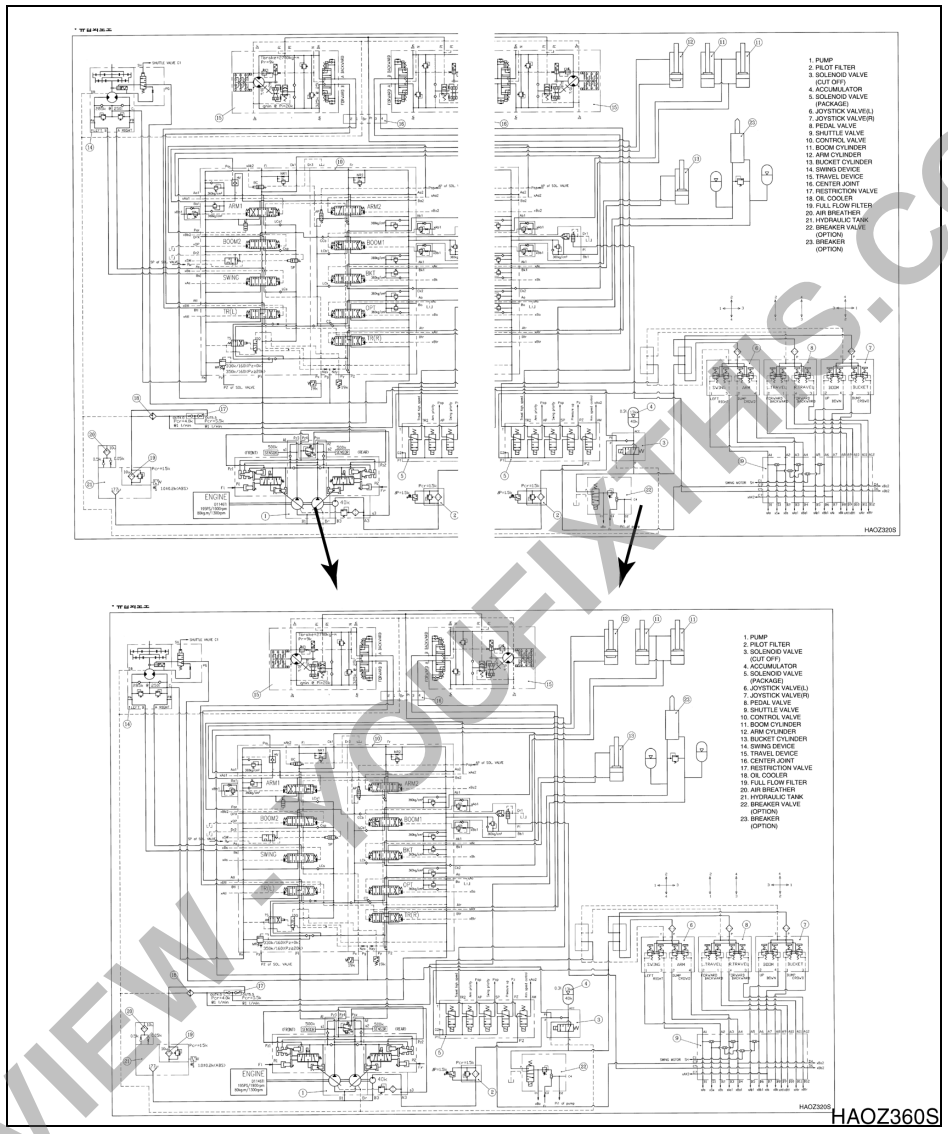

HAOZ360S

Figure 1

PREVIEW - YOUFIXTHIS.COM

Download full manual at youfixthis.com

GENERAL DESCRIPTION

Schematic(s) presented in this section are laid out on facing pages.

An overlapping edge has been taken into consideration so that a photocopy can be made and pasted together to make a complete schematic.

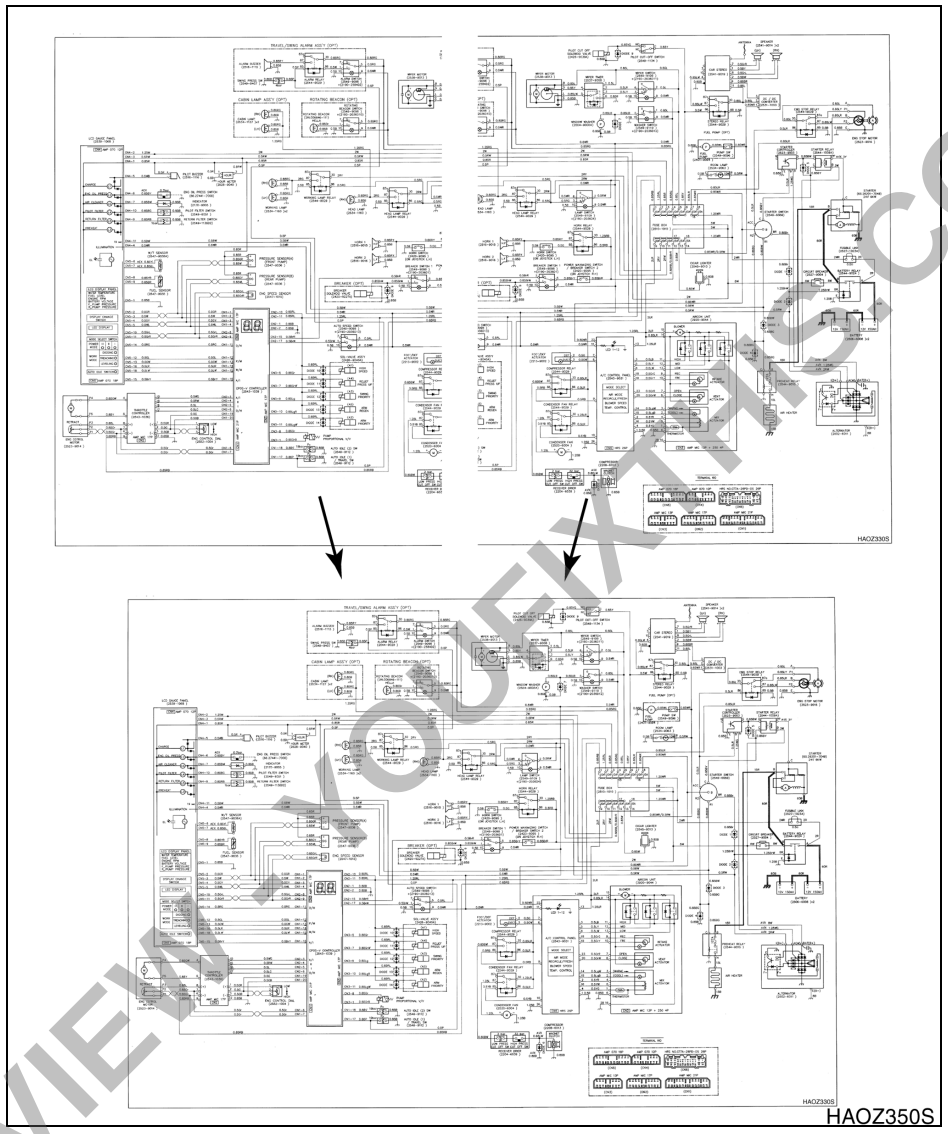

Figure 1

PREVIEW - YOUFIXTHIS.COM

Download full manual at youfixthis.com

PREVIEW - YOUFIXTHIS.COM

Download full manual at youfixthis.com

PREVIEW - YOUFIXTHIS.COM

Download full manual at youfixthis.com

scratching. Curling under of any seal lip will seriously impair its efficiency. Apply a thin coat of Loctite #120 to outer diameter, of metal casing, on oil seals to assure an oil tight fit into retainer. Use extreme care not to get Loctite on lips of oil seals. If this happens, that portion of the seal will become brittle and allow leakage.

When replacing lip type seals, make sure spring loaded side is towards oil to be sealed.

5. If available, use magna-flux or similar process for checking for cracks that are not visible to the eye. Examine teeth on all gears carefully for wear, pitting, chipping, nicks, cracks or scores. Replace all gears showing cracks or spots where case hardening has worn through. Small nicks may be removed with suitable hone. Inspect shafts and quills to make certain they have not been sprung, bent, or splines twisted, and that shafts are true.

   NOTE: *Spline wear is not considered detrimental except where it affects tightness of splined parts.*

   Inspect thrust washers for distortion, scores, burs, and wear. Replace thrust washer if defective or worn.

6. Inspect bores and bearing surfaces of cast parts and machined surfaces for scratches, wear, grooves and dirt. Remove any scratches and burrs with crocus cloth. Remove foreign matter. Replace any parts that are deeply grooved or scratched which would affect their operation.

BEARING INSPECTION

The conditions of the bearing are vital to the smooth and efficient operation of the machinery. When any component containing bearings is disassembled, always carefully examine the condition of the bearings and all of its components for wear and damage.

Once the bearing is removed, clean all parts thoroughly using a suitable cleaning solution. If the bearing is excessively dirty soak the bearing assembly in a light solution and move the bearing around until all lubricants and or foreign materials are disolved and the parts are thoroughly clean.

When drying bearings, moisture free compressed air can be used. Be careful not to direct the air in a direction which will force the bearing to dry spin while not being properly lubricated.

After the bearings have been cleaned and dried, carefully inspect all bearing rollers, cages and cups for wear, chipping or nicks. If the bearing can not be removed and is to be inspected in place, check foe roughness of rotation, scoring, pitting, cracked or chipped races. If any of these defects are found replace the whole bearing assembly. NEVER replace the bearing alone without replacing the mating cup or the cone at the same time.

After inspection lightly coat the bearing and related parts with oil and wrap in a clean lintless cloth or paper and protect them from moisure and other foreign materials until installation.

It is also important to inspect the bearing housing and/or shaft for grooved, galled or burred conditions that indicate that the bearing has been turning in its housing or on its shaft.

If available, use magna-flux or similar process for checking for cracks that are not visible to the naked eye.

The following illustrations will aid in identifying and diagnosing some of the bearing related problems.

NOTE: *The illustrations will only show tapered roller bearings, but the principles of identifying, diagnosing and remedying the the defects are common to all styles and types of bearings.*

PREVIEW - YOUFIXTHIS.COM

Download full manual at youfixthis.com

GENERAL

Before any attempt is made to begin removal or installation of the counterweight, the excavator must be parked on a firm and level supporting surface, with no sloping surfaces or soft or muddy ground in the area where the assist lift crane will be working. Position all accessories in the overnight storage position.

⚠ WARNING!

The weight of counterweight is given in the following table. Use only rated and approved slings and hardware when removal or installation lifts are being made. Lifting slings, shackles and all other hardware must be rigged safely. An assist crane that is rated above weight capacity is required.

MODEL	WEIGHT OF COUNTERWEIGHT
Solar 130LC-V	2,100 kg (4,630 lbs.
Solar 220LC-V	4,000 kg (8,818 lbs.)
Solar 220LL	5,300 kg (11,685 lbs.)
Solar 290LC-V	4,500 kg (9,920 lbs.)
Solar 290LL	6,300 kg (13,890 lbs.)
Solar 330LC-V	6,500 kg (14,330 lbs.)
Solar 400LC-V	8,200 kg (18,078 lbs.)

Responsibility should be assigned to one person to be in charge of the lifting crew, and to verify that required safe lifting precautions have been taken before each part of the procedure has been started.

All members of the working crew should know and understand the signals that will be used between the lifting leader, the assist crane operator and the remainder of the work crew.

⚠ WARNING!

If the turntable deck has been unbalanced by removal of weight from one end only, traveling the excavator, swinging the turntable, movement over bumps or sloping and uneven surfaces could cause loss of control and possible accidents or injuries.

PREVIEW - YOUFIXTHIS.COM

Download full manual at youfixthis.com

DISASSEMBLY

⚠ CAUTION!

1. **Place the disassembled parts in a safe location so they do not get damaged.**
2. **Prior to reassembly, inspect each part for any damages.**
3. **Clean and dry each part before reassembly.**
4. **Clean all surface of sealing compound.**
5. **Torque all bolts according to specifications.**

1. Remove swing motor assembly from the equipment and drain gear oil from housing by opening drain plug.

⚠ CAUTION!

Please take out gear oil with clean container and check for wearing out part.

2. Remove mounting bolts (602) and separate motor from reduction gear.
3. Remove No. 1 sun gear (211)
4. Remove No. 1 carrier assembly with No. 1 planetary gear (210).
5. Disassembling No. 1 carrier assembly.
   A. Remove stopper ring (911) and separate side plate located on the upper part.

⚠ CAUTION!

Mark on each planetary gear and pin so that they can be replaced to their proper location during reassembly.

   B. Remove planetary gear (210) and needle cage (403).
   C. Remove side plate from lower section of planetary gear (285).
   D. Remove three planetary gear A (210) and remove thrust washer located in the center.

   If the No. 1 pin (283) is not defective, do not remove it from the No. 1 carrier (231). If it must be replaced, tap on the inner side of the pin to remove.

6. Remove No. 2 sun gear (204).
7. Remove No. 2 carrier assembly.
8. Disassembling No. 2 carrier assemble.

   If there are no visible defects after inspection, do not disassemble the No. 2 carrier assembly.

   A. Place a dowel at the opposite end of No. 2 pin (282) and tap it with a hammer to cut off the spring pin (910) and remove No. 2 pin (282).
   B. Remove No. 2 planetary gear (203) and thrust washer 1 (285).

PREVIEW - YOUFIXTHIS.COM

Download full manual at youfixthis.com

PREVIEW - YOUFIXTHIS.COM

Download full manual at youfixthis.com

OPERATION OF WORKING COMPONENTS

BOOM OPERATING CIRCUIT

The boom operating circuit includes the right and left main hydraulic pumps (both halves of the main pump assembly), both sides of the control valve and the boom cylinder. The circuit operates in boom down mode through the first shift position and through the second shift position in boom up mode. Overload relief valves set at 360 kg/cm sq. (5,112 psi) protect the hydraulic system from damage as a result of overloads or shocks to the boom.

BOOM UP CIRCUIT

When you pull the boom control lever backward, the right side pilot valve generates secondary boom up pilot pressure that is transmitted to the right and left sides of the control valve simultaneously. When secondary pilot pressure reaches 4 to 6 kg/cm sq. (57 to 85 psi), boom control valve spools open and oil from both pumps goes to the boom cylinder.

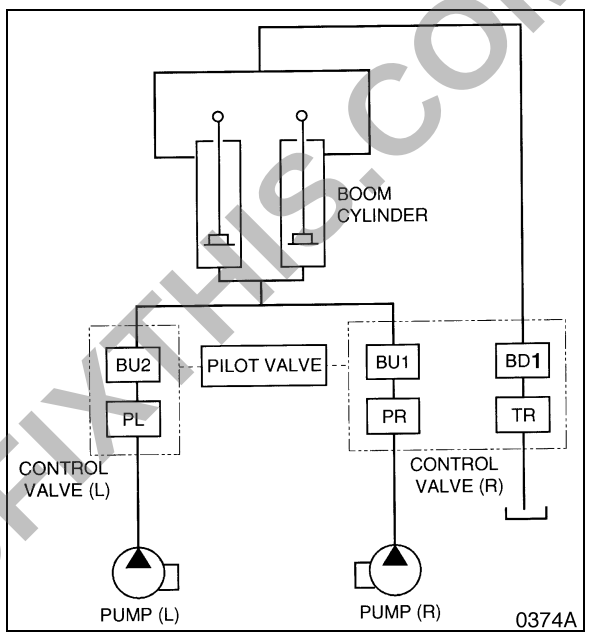

Figure 2

BOOM DOWN CIRCUIT

When the boom control lever is pushed forward, the right side pilot valve generates secondary boom down pilot pressure that is transmitted only to the right side of the control valve. When secondary pilot pressure reaches 4 to 6 kg/cm sq. (57 to 85 psi), the valve spool on the right side of the control valve opens so that oil from only one half of the pump assembly goes to the boom cylinder for boom lowering.

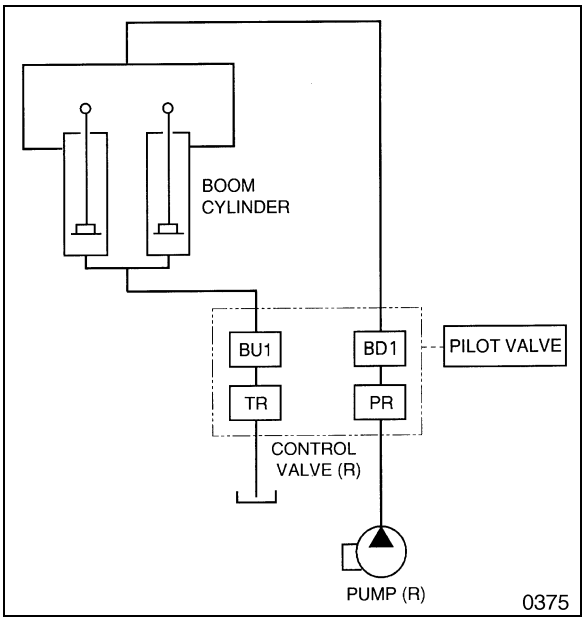

Figure 3

PREVIEW - YOUFIXTHIS.COM

Download full manual at youfixthis.com

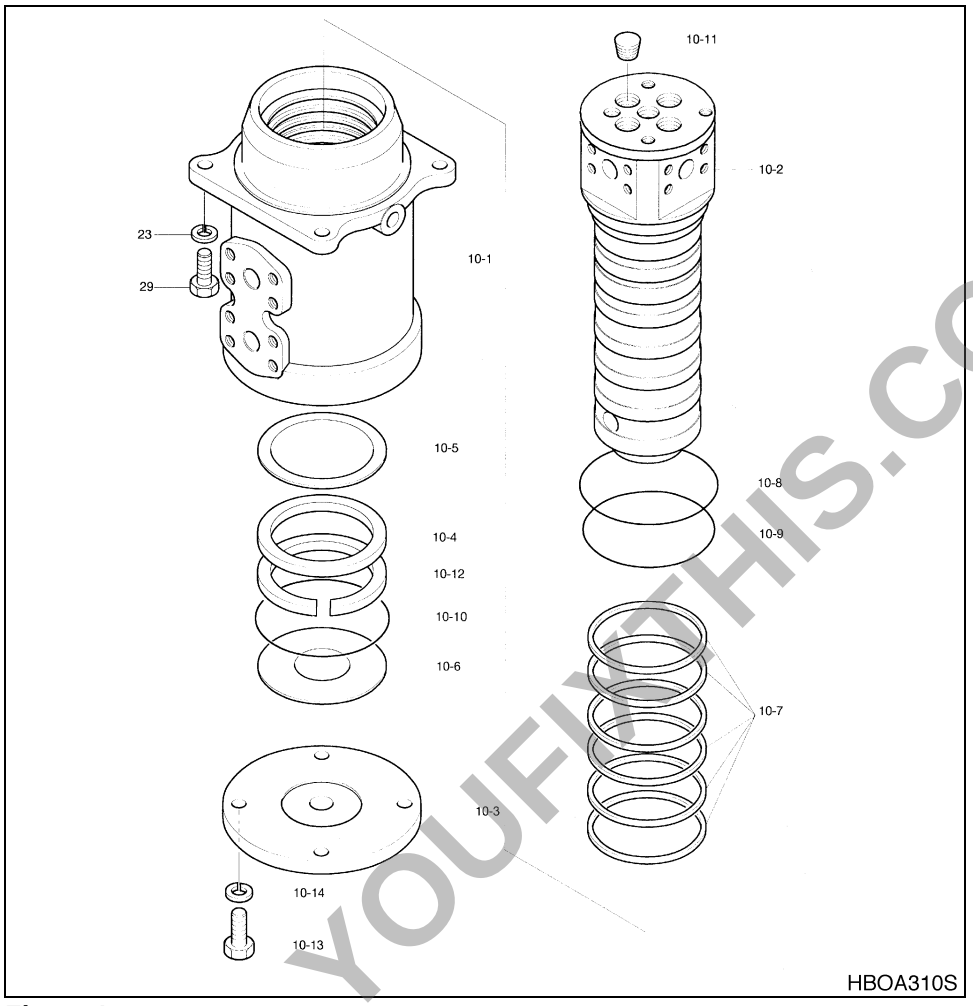

Figure 1

Reference Number	Description
10-1	Center Joint Body
10-2	Spindle
10-3	Cover
10-4	Spacer
10-5	Shim
10-6	Shim
10-7	Seal; Slipper
10-8	O-ring 1AP-120

Reference Number	Description
10-9	O-ring 1BP-100
10-10	O-ring 1BG-120
10-11	Plug PT3/4
10-12	Ring; Retaining
10-13	Bolt M12x1.75x30
10-14	Washer; Spring M12
23	Washer; Spring
29	Bolt

PREVIEW - YOUFIXTHIS.COM

Download full manual at youfixthis.com

SPECIAL TOOLS

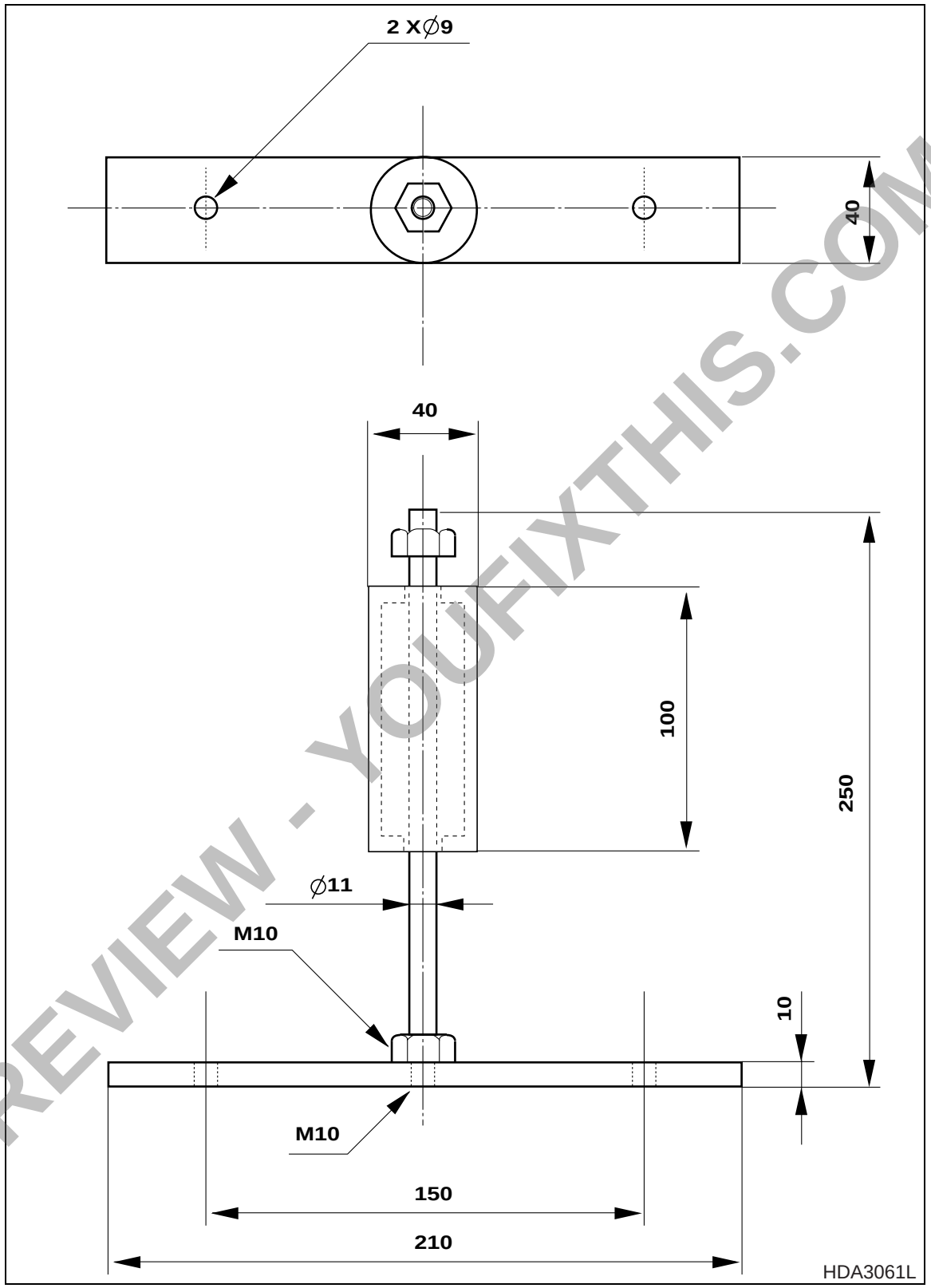

Figure 5

PREVIEW - YOUFIXTHIS.COM

Download full manual at youfixthis.com

Number	Description	Quantity
Rear Flange Kit:		
101	Rear Flange	1
123	Spool	1
146	Hex Socket Plug	3
154	Hex Socket Plug	6
179	Filter	1
190	Orifice	1
199	Name Plate	1
124	Plug	2
125	Retainer Spring	2
126	Plug	2
127	Valve	2
128	Spring	2
130	Spring	2
136	O-ring	2
137	O-ring	2
163	Control Valve	1
164	Stopper	1
165	Ring	1
166	Spring	1
168	Steel Ball	2
192	Plug	2
102	Drive Shaft	1
103	Swash Plate	1
104	Cylinder Block	1
107	Retainer Plate	1
108	Thrust Ball	1
109	Timing Plate	1
110	Washer	2
111	Washer	1
112	Piston	1
113	Spring	8

Number	Description	Quantity
114	Spring	1
115	Friction Plate	2
116	Mating Plate	2
117	Mating Plate	1
121	Plug	1
132	Oil Seal	1
135	O-ring	1
138	O-ring	2
139	O-ring	1
141	Parallel Pin	1
142	Parallel Pin	2
143	Hex Socket Bolt	8
145	Snap Ring	1
149	Roller Bearing	1
150	Ball Bearing	1
151	Needle Roller	3
167	Pivot	2
169	Collar	1
170	Hex Socket Bolt	4
171	Parallel Pin	2
173	O-ring	1
174	Super Lock Washer	4
191	Spring	1
193	O-ring	2
Piston Kit:		
105	Piston	9
106	Shoe	9
161	Piston	1
162	Shoe	1
Valve Kit:		
201	Valve	2
202	Sleeve	2

PREVIEW - YOUFIXTHIS.COM

Download full manual at youfixthis.com

Speed Reduction Gearbox and Hydraulic Motor

1. Apply grease to input gear and ball and install input gear.
2. Fill with 2.5 l (2.6 q).
3. Install O-ring to cover.
4. Install I-bolt to plug crew on cover, lift up cover and install to hub.



Figure 93

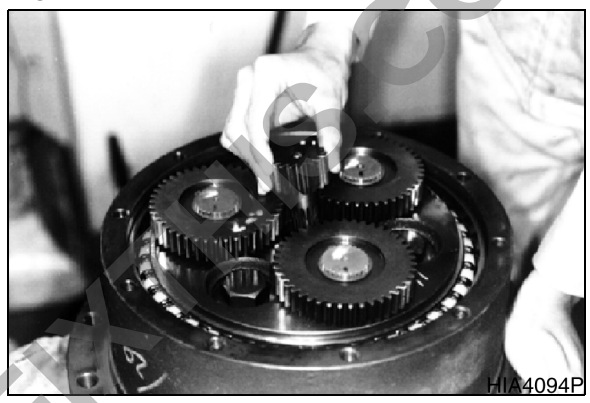

Figure 94

5. Install cover to hub.
6. Install ten hex socket bolts and tighten to 10.4 ± 1.6 kg m (75 ± 11.5 ft lb).



Figure 95

7. Wrap hex socket plug with seal tape and install.



Figure 96

PREVIEW - YOUFIXTHIS.COM

Download full manual at youfixthis.com

7. Assemble lever (613) onto feedback lever (611).

   NOTE: *Make certain pin (875) at the lower portion of lever (613) is properly mated with groove in piston (643).*

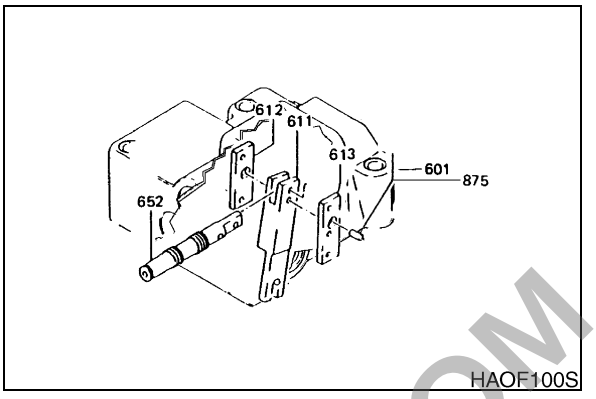

Figure 41

8. Install O-rings (755) onto portion (614) and adjusting (615) plugs. Insert pin (875) into portion plug. Install both plugs into their proper bore and secure with snap rings (858).

   NOTE: *Be certain to install plugs into correct bore. Feedback lever should move freely and not bind up.*

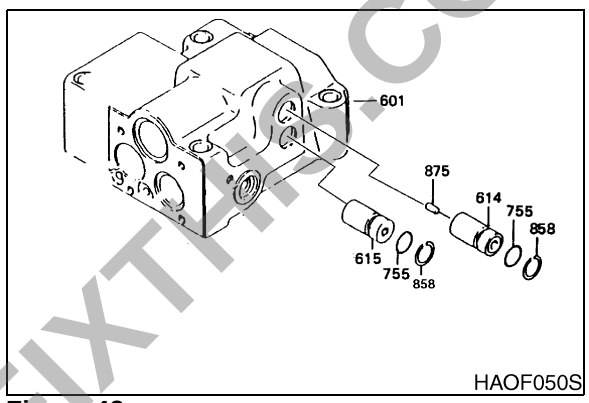

Figure 42

9. Install O-rings (722, 735) into cover and mount cover (656) onto block using four hex-head allen-style bolts (438).

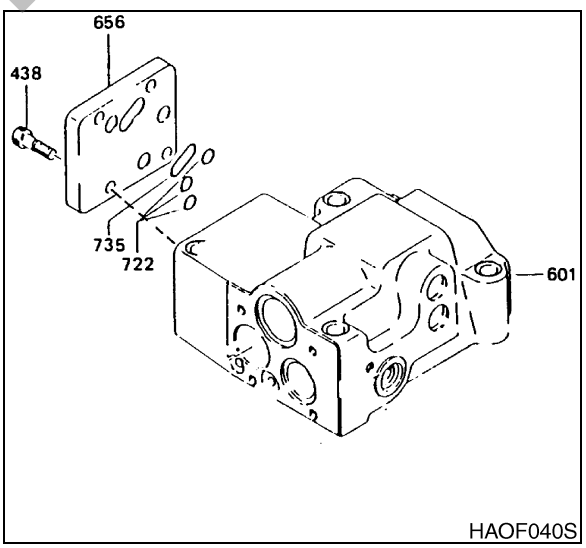

Figure 43

PREVIEW - YOUFIXTHIS.COM

Download full manual at youfixthis.com

Check Valve [Sw]

Reference Number	Description
1	Sleeve
2	O-ring
3	Back-up Ring
4	Back-up Ring
5	O-ring
6	Check
7	Spring

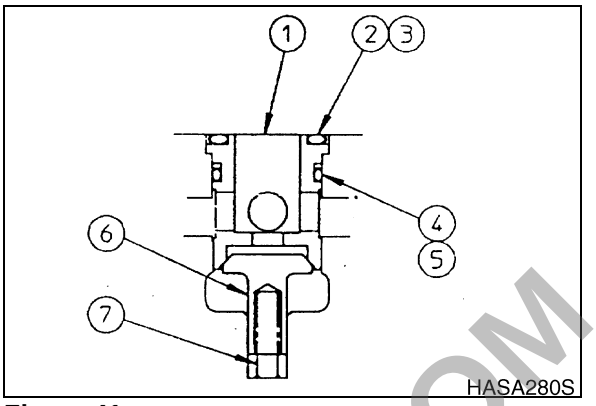

Figure 41

Straight Travel Selector Valve

Reference Number	Description
1	Check
2	O-ring
3	Spring
4	Spool TS

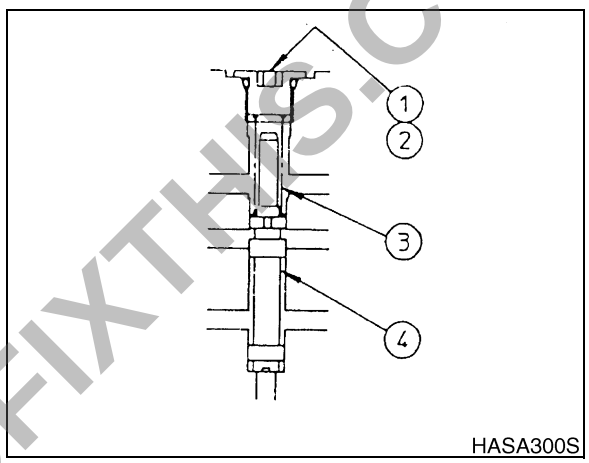

Figure 42

PREVIEW - YOUFIXTHIS.COM

Download full manual at youfixthis.com

IMPORTANT

When disassembling Swing Straight Travel Valve, tag and label each component so that all parts can be reassembled in the proper order.

IMPORTANT

When assembling components, inspect O-rings for any damage and replace as necessary.

Reference Number	Description
1	Cap
2	Stopper
3	Spring
4	Check

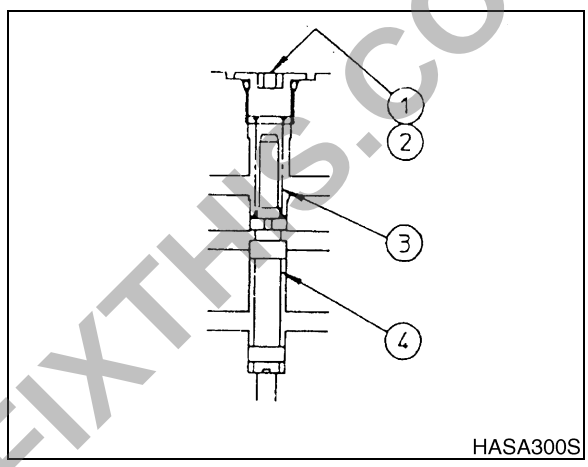

Figure 107

1. Loosen cap (1), remove stopper (2), spring (3) and check (4).

Cap hole size	8 mm
Tightening torque	4 kg m

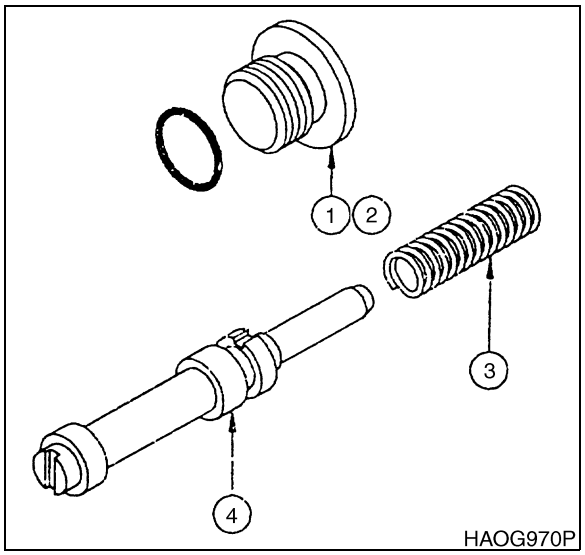

Figure 108

PREVIEW - YOUFIXTHIS.COM

Download full manual at youfixthis.com

Special Jlg 2 [For Assembly Of Retainer Ring (221)]

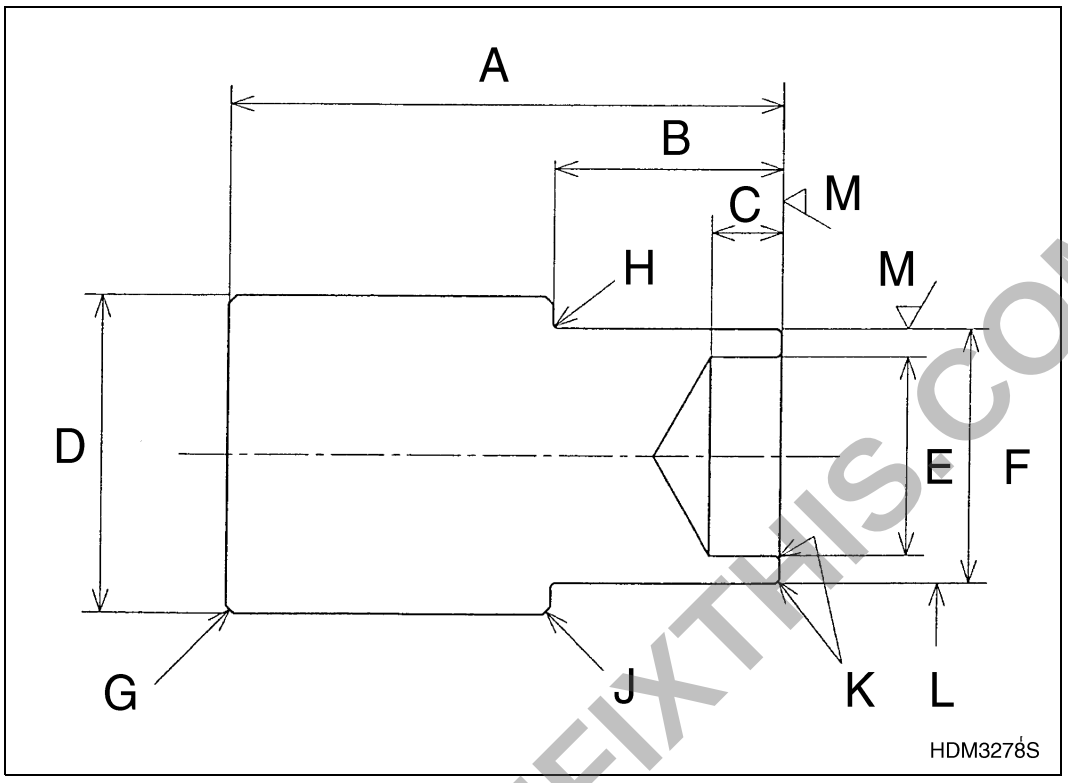

Figure 9

Dimension	Distance
A	70.0 mm (2.76 in.)
B	29 ±0.2 mm (1.14 ±0.01 in.)
C	9.0 mm (0.35 in.)
D	40.0 mm (1.57 in.) Diameter
E	25.0 mm (0.98 in.) Diameter
F	31.92 - 31.97 mm (1.2567 - 1.2587 in.) Diameter

Dimension	Distance
G	1.0 mm (0.04 in.) Chamfer
H	0.5 mm Radius
J	1.0 mm (0.04 in.) Chamfer
K	0.50 mm (0.02 in.) Chamfer
L	0.050 mm (0.0020 in.) Total Diametrical Run Out
M	3.2 Micro Finish

PREVIEW - YOUFIXTHIS.COM

Download full manual at youfixthis.com

ELECTRIC SUPPLY SYSTEM

The electric power circuit supplies electric current to each electric component. It consists of a battery, battery relay, start switch, circuit breaker, fusible link and fuse box.

The negative terminal of the battery is grounded to the vehicle body.

Even when the start switch is in the “OFF” position, electric current is supplied to the following components through battery → fusible link → fuse circuit.

1. Cabin lamp, fuel pump switch, No. 1 terminal of DC-DC converter (back up for car stereo memory)
2. ‘B’ terminal of start switch and No. 22 terminal of air-conditioner control panel.
3. Power terminal ‘B’ of engine stop motor.

When the start switch is in the preheat, on and start positions, the current flows from the battery → fusible link → fuse → start switch ‘B’ terminal/start switch ‘BR’ terminal → battery relay ‘BR’ terminal which activates the coil of the battery relay and the electric supply system is energized.

When the battery relay’s contacts are connected, all electric devices can be operated.

While the engine is not running, the electric power for all electric devices are supplied by the battery. Once the engine is started the power is supplied from the alternator.

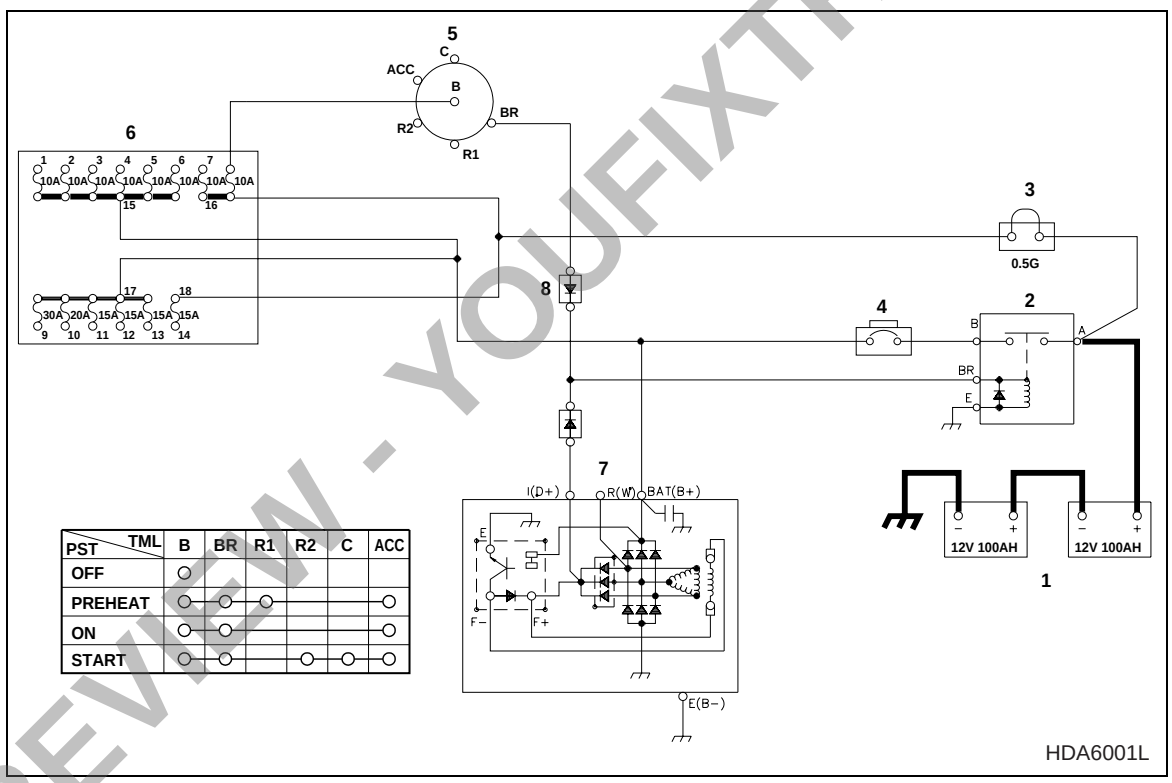

Figure 1 ELECTRIC POWER CIRCUIT DIAGRAM

Reference Number	Description
1	Battery
2	Battery Relay
3	Fusible Link
4	Circuit Breaker

Reference Number	Description
5	Start Switch
6	Fuse Box
7	Alternator
8	Diode

PREVIEW - YOUFIXTHIS.COM

Download full manual at youfixthis.com

ENGINE CONTROL CIRCUIT DIAGRAM

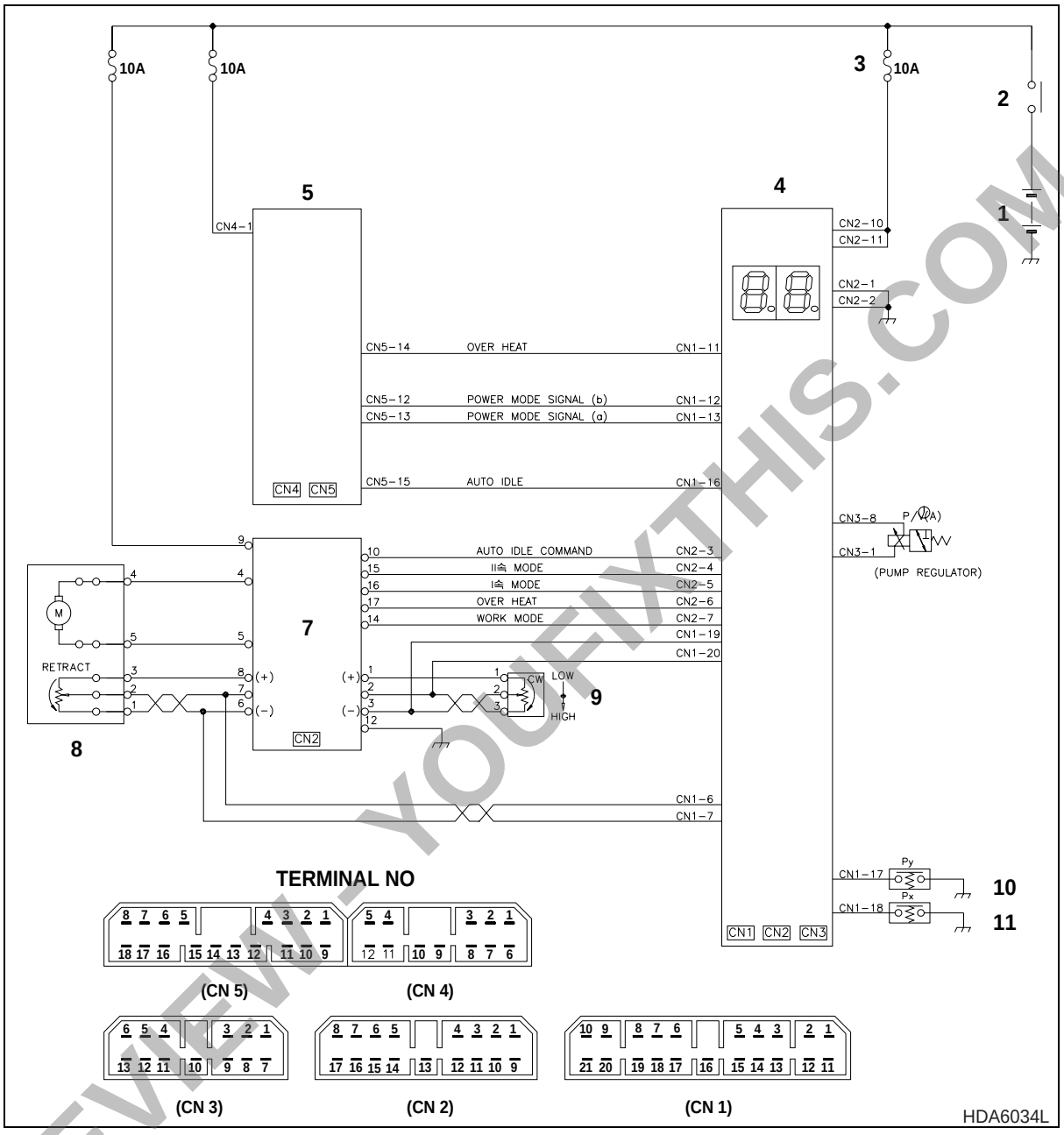

Figure 31

Reference Number	Description
1	Battery
2	Battery Relay
3	Fuse
4	EPOS - V Controller
5	Instrument Panel
6	Engine Speed Sensor

Reference Number	Description
7	Engine Throttle Controller
8	Engine Control Motor
9	Engine Control Dial
10	Pressure Switch (Py Port)
11	Pressure Switch (Px Port)

PREVIEW - YOUFIXTHIS.COM

Download full manual at youfixthis.com

PREVIEW ONLY

You're viewing 25 of 558 pages

The full manual includes:

- All 558 pages, complete
- Searchable PDF (find any keyword)
- No watermarks
- Instant download
- Print-ready quality

GET FULL MANUAL NOW

Daewoo Solar 130LC-V Shop Manual

Scan or click anywhere
youfixthis.com

Click anywhere on this page to get the full manual