Solar 140LC-V

Shop Manual

023-00076E

Serial Number 1001 and Up

January 2004

PREVIEW - YOUFIXTHIS.COM

Daewoo reserves the right to improve our products in a continuing process to provide the best possible product to the market place. These improvements can be implemented at any time with no obligation to change materials on previously sold products. It is recommended that consumers periodically contact their distributors for recent documentation on purchased equipment.

This documentation may include attachments and optional equipment that is not available in your machine's package. Please call your distributor for additional items that you may require.

Illustrations used throughout this manual are used only as a representation of the actual piece of equipment, and may vary from the actual item.

Copyright 2004 Daewoo

Download full manual at youfixthis.com

TABLE OF CONTENTS

Safety

Track Excavator Safety.....S0102000

Specifications

Specifications for Solar 140LC-V.....S0202130

General Maintenance

General Maintenance Procedures.....S0302000

Standard Torques.....S0309000

Upper Structure

Cab S0402040K

Counterweight.....S0403000

Fuel Tank.....S0405000

Fuel Transfer Pump.....S0405500

Swing Bearing.....S0407000

Swing Reduction Gearbox.....S0408020

Lower Structure and Chassis

Track Assembly.....S0505050

Engine and Drive Train

Air Conditioner..... S0605060K

Drive Coupling (Main Pump).....S0609000

Hydraulics

Hydraulic System Troubleshooting, Testing and Adjustment S0702055

Accumulator..... S0703010K

Cylinders.....S0705000

Swing Motor.....S0707220

PREVIEW - YOUFIXTHIS.COM

Download full manual at youfixthis.com

DAEWOO
DAEWOO HEAVY INDUSTRIES & MACHINERY LTD.

TRACK EXCAVATOR SAFETY

⚠ CAUTION!

Follow all safety recommendations and safe shop practices outlined in the front of this manual or those contained within this section.

Always use tools and equipment that is in good working order.

Use lifting and hoisting equipment capable of safely handling load.

Remember, that ultimately safety is your own personal responsibility.

MODEL	SERIAL NUMBER RANGE
Solar 130LC-V	0001 and Up
Solar 140LC-V	1001 and Up
Solar 170LC-V	1001 and Up
Solar 175LC-V	1001 and Up
Solar 220LC-V	0001 and Up
Solar 220N-V	1001 and Up
Solar 225LC-V	1001 and Up
Solar 225NLC-V	1001 and Up
Solar 250LC-V	1001 and Up
Solar 255LC-V	1001 and Up
Solar 290LC-V	0001 and Up
Solar 300LC-V	1001 and Up
Solar 300LL	1001 and Up
Solar 330LC-V	1001 and Up
Solar 340LC-V	1001 and Up
Solar 400LC-V	1001 and Up
Solar 420LC-V	1001 and Up
Solar 450LC-V	1001 and Up
Solar 470LC-V	1001 and Up

Copyright 2004 Daewoo

January 2004

PREVIEW - YOUFIXTHIS.COM

Download full manual at youfixthis.com

GENERAL SPECIFICATIONS

Shipping Weight	13.9 metric tons (30,645 lb), includes 10% fuel, boom, 2,500 mm (8' 2") arm, standard bucket and standard shoes
Operating Weight	Add weight of full fuel tank and operator.
Shipping Weights With Optional Track Shoes	13.9 ton for 600 mm (24") shoes
	13.7 ton for 500 mm (20") shoes
	14.1 ton for 700 mm (28") shoes
Major Component Weights	Standard Boom 872.0 kg (1,923 lb)
	2,500.0 mm (8' 3") Arm 534.0 kg (1,177 lb)
	3,000.0 mm (9' 9") Arm 587.0 kg (1,294 lb)
	Boom Cylinders 105.0 kg (232 lb) each
	Arm Cylinder 146.0 kg (322 lb)
	Bucket Cylinder 88.0 kg (194 lb)
	Counterweight 2,100.0 kg (4,630 lb)
	Upper Turntable 5,100.0 kg (11,244 lb)
	Lower - below Swing Bearing 6,400.0 kg (14,110 lb)
Digging Forces:	
Bucket Cylinder	82 KN or 8,340 kg (18,390 lb) - with 2,500 mm (8' 3") arm
	40 KN or 4,050 kg (8,940 lb) - with 3,000 mm (9' 9") arm
Arm Cylinder	76 KN or 7,700 kg (16,980 lb) - with 1,900 mm (6' 3") arm
	62 KN or 6,300 kg (13,900 lb) - with 2,500 mm (8' 3") arm
	55 KN or 5,600 kg (12,350 lb) - with 3,000 mm (9' 9") arm
Fuel Tank Capacity	230 liters (60.8 gal)
Hydraulic System Capacity	165 liters (43.6 gal.)
Hydraulic Reservoir Capacity	89 liters (23.5 gal)
Bucket Heaped Capacity Range	PCSA 0.50 - 1.18 m^3 (0.65 - 1.55 yd^3)
	IMPORTANT: Refer to the Load Weight, Bucket and Arm Length Compatibility Table for information on which bucket sizes may be used safely with which arm length, for load material weights.
Shoe Type	Triple Grouser
Shoe Width and Optional Sizes	600 mm (24") - standard
	500 mm (20") - optional
	700 mm (28") - optional
Ground Pressure Ratings:	
Standard 600 mm (24") shoe -	0.35 kg/cm^2 (5.0 psi)
Optional 500 mm (20") shoe -	0.42 kg/cm^2 (6.0 psi)
Optional 700 mm (28") shoe -	0.31 kg/cm^2 (4.4 psi)
Transport Dimensions	
Overall Shipping Length (standard boom and arm)	7,700 mm (25' 3")

PREVIEW - YOUFIXTHIS.COM

Download full manual at youfixthis.com

REMOVAL

CAUTION!

Avoid disassembling cab if there are strong wind gusts, which could catch large surface area of cab shell and push it sideways during lift.

1. Park on firm and level ground.
2. Lower front attachment (bucket) to ground.
3. Shut down engine.
4. Set safety lever on "RELEASED" position.
5. Turn starter switch "ON."

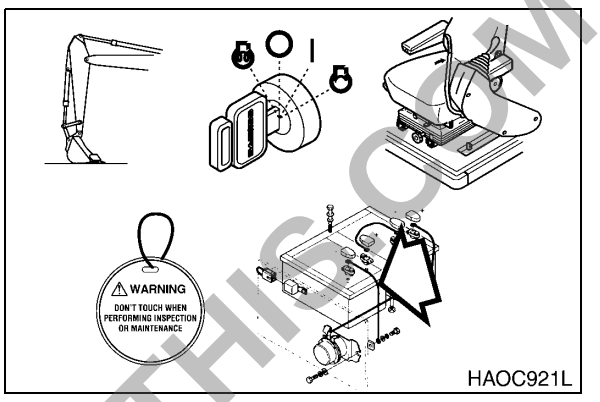

Figure 1

WARNING!

If engine must be running while performing maintenance, always use extreme caution. Always have one person in the cab at all times. Never leave the cab with engine running.

6. Fully stroke work levers (joysticks) in all directions to relieve any pressure from the accumulators.
7. Set safety lever on "LOCK" position.
8. Turn key to "OFF" position and remove from starter switch.
9. Hang a maintenance warning tag on controls.
10. Disconnect the battery cable from the negative (-) battery terminal.
11. Prepare cab shell for removal by disconnecting wiring connectors for:
    A. Cab interior lighting.
    B. External light wiring.
    C. Radio antenna and connections.
    D. Wiper/washer connections.

NOTE: *Control console wiring harnesses and hydraulic piping lines that pass through the floor of the cab do not need to be disassembled.*

NOTE: *If unit is equipped with a cab protective structure (for forestry, or hazardous working conditions), it must be removed.*

PREVIEW - YOUFIXTHIS.COM

Download full manual at youfixthis.com

Reference Number	Description
1	Fuel Tank
2	Filter
3	O-ring
4	Cover
5	Bolt
6	Spring Washer
7	Cock
8	Bolt
9	Shim
10	Shim
11	Fuel Filter
12	Cap
13	Plug
14	Level Gauge

Reference Number	Description
14a	Plate
14b	O-ring
14c	Bolt
14d	Plug
14e	Tape
18	Cover Flange
19	O-ring
20	Socket Bolt
23	Hard Washer
24	Bolt
25	Vinyl Hose
26	Hose Clamp
28	Hose Clamp

SPECIFICATIONS

Model	Fuel Tank Capacity
S130LC-V	230 liters (61 U.S. gal)
S140LC-V	230 liters (61 U.S. gal)
S220LC-V	310 liters (82 U.S. gal)
S290LC-V	435 liters (115 U.S. gal)

PREVIEW - YOUFIXTHIS.COM

Download full manual at youfixthis.com

GENERAL DESCRIPTION

Schematic(s) presented in this section are laid out on facing pages.

An overlapping edge has been taken into consideration so that a photocopy can be made and pasted together to make a complete schematic.

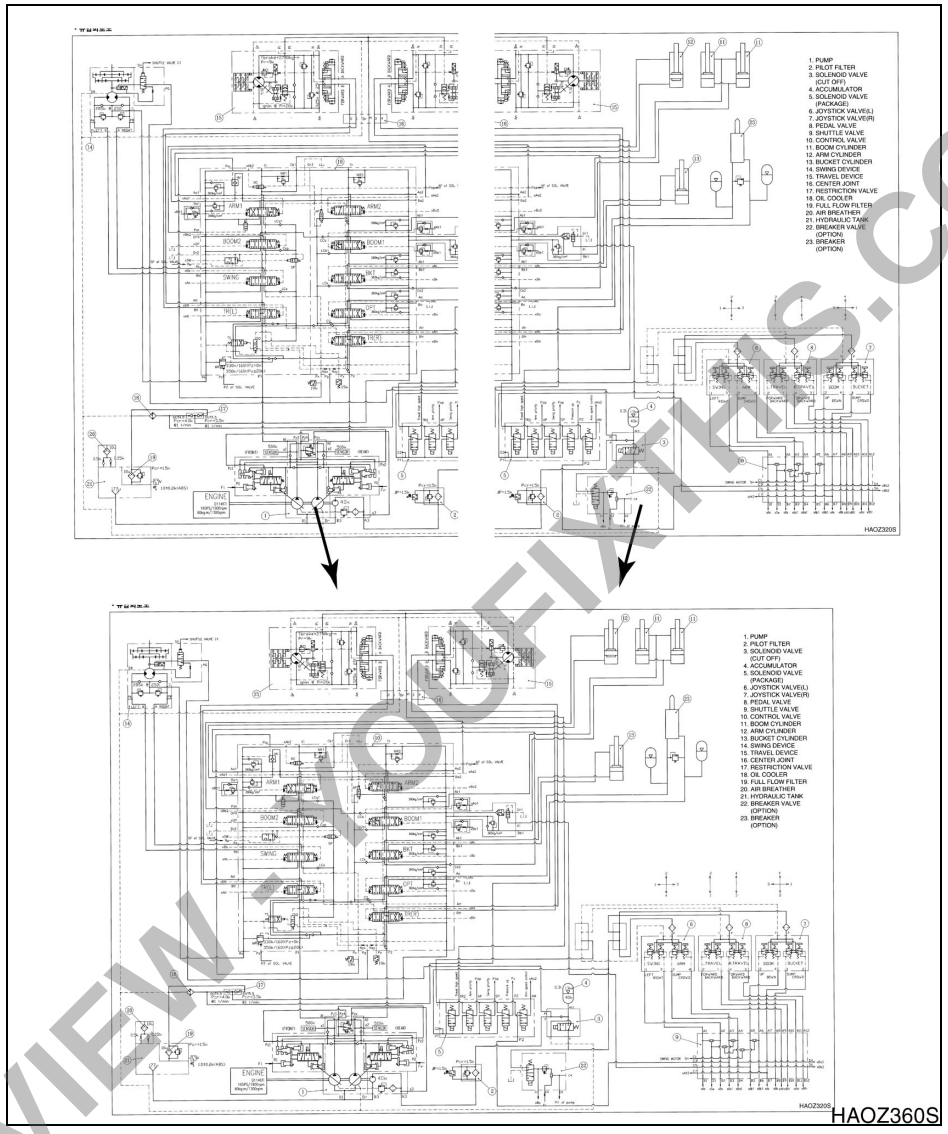

Figure 1

PREVIEW - YOUFIXTHIS.COM

Download full manual at youfixthis.com

TABLE OF CONTENTS

General Description..... 3
Solar 140LC-V..... 4

PREVIEW - YOUFIXTHIS.COM

Download full manual at youfixthis.com

TORQUE VALUES FOR STANDARD METRIC FASTENERS

NOTE: *The units for the torque values are kg•m (ft lb).*

Dia. x Pitch (mm)	Grade										
	3.6 (4A)	4.6 (4D)	4.8 (4S)	5.6 (5D)	5.8 (5S)	6.6 (6D)	6.8 (6S)	6.9 (6G)	8.8 (8G)	10.9 (10K)	12.9 (12K)
M5 x Std.	0.15 (1.08)	0.16 (1.15)	0.25 (1.80)	0.22 (1.59)	0.31 (2.24)	0.28 (2.02)	0.43 (3.11)	0.48 (3.47)	0.50 (3.61)	0.75 (5.42)	0.90 (6.50)
M6 x Std.	0.28 (2.02)	0.30 (2.16)	0.45 (3.25)	0.40 (2.89)	0.55 (3.97)	0.47 (3.39)	0.77 (5.56)	0.85 (6.14)	0.90 (6.50)	1.25 (9.04)	1.50 (10.84)
M7 x Std.	0.43 (3.11)	0.46 (3.32)	0.70 (5.06)	0.63 (4.55)	0.83 (6.00)	0.78 (5.64)	1.20 (8.67)	1.30 (9.40)	1.40 (10.12)	1.95 (14.10)	2.35 (16.99)
M8 x Std.	0.70 (5.06)	0.75 (5.42)	1.10 (7.95)	1.00 (7.23)	1.40 (10.12)	1.25 (9.04)	1.90 (13.74)	2.10 (15.18)	2.20 (15.91)	3.10 (22.42)	3.80 (27.48)
M8 x 1	0.73 (5.28)	0.80 (5.78)	1.20 (8.67)	1.00 (7.23)	1.50 (10.84)	1.35 (9.76)	2.10 (15.18)	2.30 (16.63)	2.40 (17.35)	3.35 (24.23)	4.10 (29.65)
M10 x Std.	1.35 (9.76)	1.40 (10.12)	2.20 (15.91)	1.90 (13.74)	2.70 (19.52)	2.35 (19.99)	3.70 (26.76)	4.20 (30.37)	4.40 (31.18)	6.20 (44.84)	7.20 (52.07)
M10 x 1	1.50 (10.84)	1.60 (11.57)	2.50 (18.08)	2.10 (15.18)	3.10 (22.42)	2.80 (20.25)	4.30 (31.10)	4.90 (35.44)	5.00 (36.16)	7.00 (50.63)	8.40 (60.75)
M12 x Std.	2.40 (17.35)	2.50 (18.08)	3.70 (26.76)	3.30 (23.86)	4.70 (33.99)	4.20 (30.37)	6.30 (45.56)	7.20 (52.07)	7.50 (54.24)	10.50 (75.94)	12.50 (90.41)
M12 x 1.5	2.55 (18.44)	2.70 (19.52)	4.00 (28.93)	3.50 (25.31)	5.00 (36.16)	4.50 (32.54)	6.80 (49.18)	7.70 (55.69)	8.00 (57.86)	11.20 (81.00)	13.40 (96.92)
M14 x Std.	3.70 (26.76)	3.90 (28.20)	6.00 (13.23)	5.20 (37.61)	7.50 (54.24)	7.00 (50.63)	10.00 (72.33)	11.50 (83.17)	12.00 (86.79)	17.00 (122.96)	20.00 (144.66)
M14 x 1.5	4.10 (29.65)	4.30 (31.10)	6.60 (47.73)	5.70 (41.22)	8.30 (60.03)	7.50 (54.24)	11.10 (80.28)	12.50 (90.41)	13.00 (94.02)	18.50 (11.26)	22.00 (158.12)
M16 x Std.	5.60 (40.50)	6.00 (43.39)	9.00 (65.09)	8.00 (57.86)	11.50 (83.17)	10.50 (75.94)	15.50 (112.11)	17.90 (129.47)	18.50 (133.81)	26.00 (188.05)	31.00 (224.22)
M16 x 1.5	6.20 (44.84)	6.50 (47.01)	9.70 (70.16)	8.60 (62.20)	12.50 (90.41)	11.30 (81.73)	17.00 (122.96)	19.50 (141.04)	20.00 (144.66)	28.00 (202.52)	35.50 (256.77)
M18 x Std.	7.80 (56.41)	8.30 (60.03)	12.50 (90.41)	11.00 (79.56)	16.00 (115.72)	14.50 (104.87)	21.00 (151.89)	27.50 (198.90)	28.50 (206.14)	41.00 (296.55)	43.00 (311.01)
M18 x 1.5	9.10 (65.82)	9.50 (68.71)	14.40 (104.15)	12.50 (90.41)	18.50 (133.81)	16.70 (120.79)	24.50 (177.20)	27.50 (198.90)	28.50 (206.14)	41.00 (296.55)	49.00 (354.41)
M20 x Std.	11.50 (83.17)	12.00 (86.79)	18.00 (130.19)	16.00 (115.72)	22.00 (159.12)	19.00 (137.42)	31.50 (227.83)	35.00 (253.15)	36.00 (260.38)	51.00 (368.88)	60.00 (433.98)
M20 x 1.5	12.80 (92.58)	13.50 (97.64)	20.50 (148.27)	18.00 (130.19)	25.00 (180.82)	22.50 (162.74)	35.00 (253.15)	39.50 (285.70)	41.00 (296.55)	58.00 (419.51)	68.00 (491.84)
M22 x Std.	15.50 (112.11)	16.00 (115.72)	24.50 (177.20)	21.00 (151.89)	30.00 (216.99)	26.00 (188.05)	42.00 (303.78)	46.00 (332.71)	49.00 (354.41)	67.00 (484.61)	75.00 (542.47)
M22 x 1.5	17.00 (122.96)	18.50 (133.81)	28.00 (202.52)	24.00 (173.59)	34.00 (245.92)	29.00 (209.75)	47.00 (339.95)	52.00 (44.76)	56.00 (405.04)	75.00 (542.47)	85.00 (614.80)
M24 x Std.	20.50 (148.27)	21.50 (155.50)	33.00 (238.68)	27.00 (195.29)	40.00 (289.32)	34.00 (245.92)	55.00 (397.81)	58.00 (419.51)	63.00 (455.67)	82.00 (593.10)	92.00 (655.43)
M24 x 1.5	23.00 (166.35)	35.00 (253.15)	37.00 (267.62)	31.00 (224.22)	45.00 (325.48)	38.00 (202.52)	61.00 (441.21)	67.00 (484.61)	74.00 (535.24)	93.00 (672.66)	103.00 (744.99)

PREVIEW - YOUFIXTHIS.COM

Download full manual at youfixthis.com

PREVIEW - YOUFIXTHIS.COM

Download full manual at youfixthis.com

BATTERY

BATTERY HAZARD PREVENTION

Battery electrolyte contains diluted sulfuric acid and batteries generate hydrogen gas. Hydrogen gas is highly explosive, and mistakes in handling them can cause serious injury or fire. To prevent problems, always do the following;

- Do not smoke or bring any flame near the battery.
- When working with batteries, ALWAYS wear safety glasses and rubber gloves.
- If you spill battery electrolyte on yourself or your clothes, immediately flush the area with water.
- If battery electrolyte gets into your eyes, flush them immediately with large quantities of water and see a doctor at once.
- If you accidentally drink battery electrolyte, drink a large quantity of water or milk, raw egg or vegetable oil. Call a doctor or poison prevention center immediately.
- When cleaning the top surface of the battery, wipe it with a clean, damp cloth. Never use gasoline, thinner, or any other organic solvent or detergent.
- Tighten the battery caps securely.
- If the battery electrolyte is frozen, do not charge the battery or start the engine with power from another source. There is danger that the battery may catch fire.
- When charging the battery or starting with power from another source, let the battery electrolyte melt and check that there is no leakage of battery electrolyte before starting the operation.
- Always remove the battery from the machine before charging.

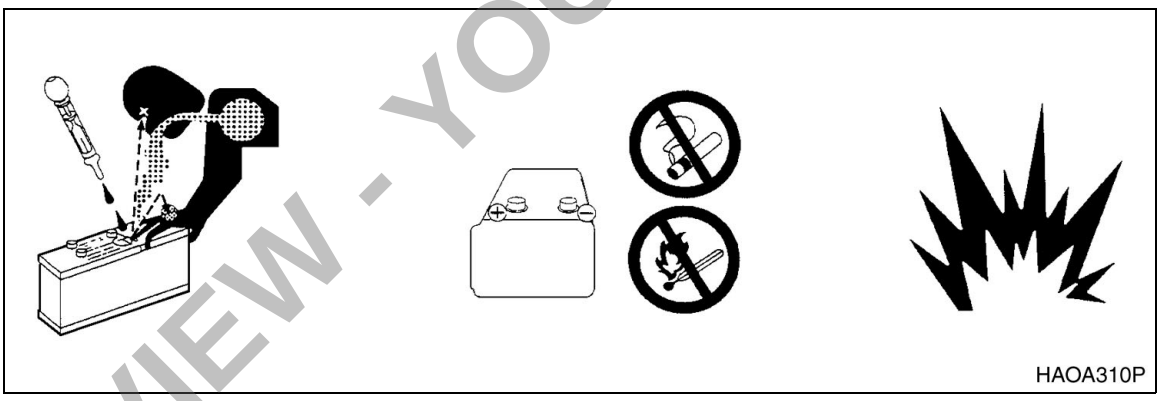

Figure 39

PREVIEW - YOUFIXTHIS.COM

Download full manual at youfixthis.com

Cracked Inner Race

Race cracked due to improper fit, cocking or poor bearing seat.

Replace all parts and housings, check seals and bearings and replace if leaking.

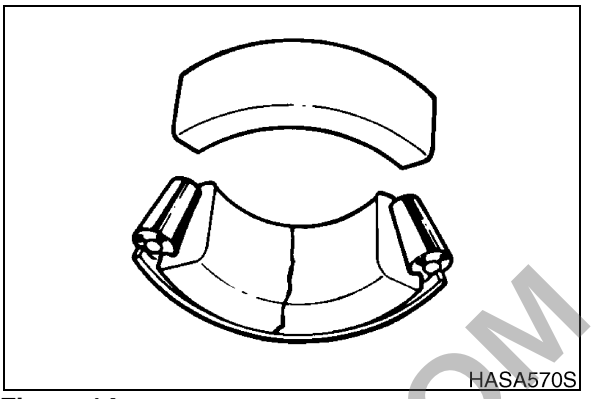

Figure 14

Smears

Smearing of metal due to slippage caused by poor fitting, lubrication, overheating, overloads or handling damage.

Replace bearings, clean related parts and check for proper fit and lubrication.

Replace shaft if damaged.

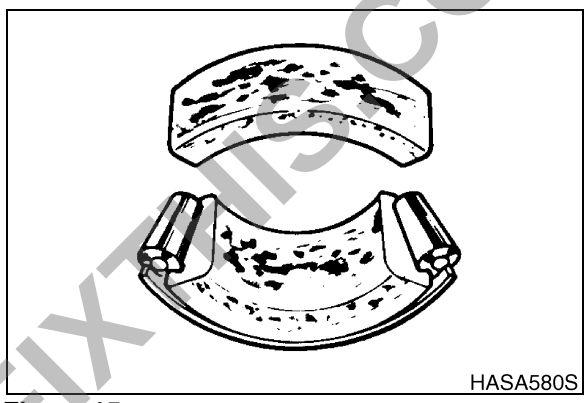

Figure 15

Frettage

Corrosion set up by small relative movement of parts with no lubrication.

Replace bearing. Clean all related parts. Check seals and check for proper lubrication.

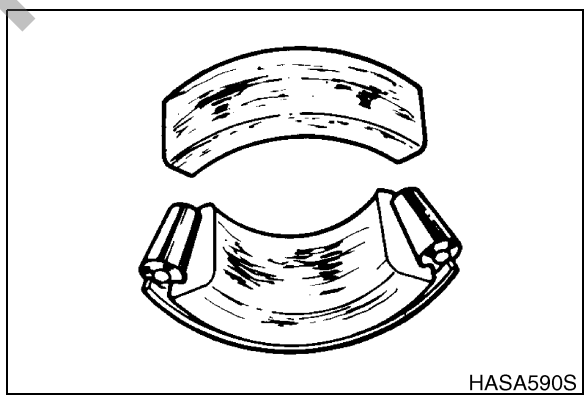

Figure 16

PREVIEW - YOUFIXTHIS.COM

Download full manual at youfixthis.com

12. Clean area around fuel tank fill cap (Figure 5). Open fuel cap.
13. Remove access cover from under fuel tank.

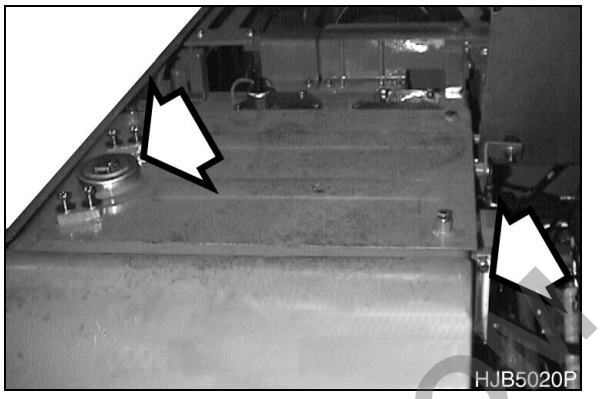

Figure 5

14. Place a large enough container under the tank to collect remaining fuel. Open the drain valve (Figure 6) at the bottom of the tank and empty the tank.

    NOTE: *Refer to "Specifications" on page 5, for fuel tank capacity.*

    NOTE: *Dispose of drained fluids according to local regulations.*



Figure 6

15. Tag and disconnect fuel supply line (1, Figure 7) and fuel return line (2) from the tank (3) and carefully drain remaining fuel from the lines.
16. Remove clamp (4, Figure 7) holding fuel return line (2) to tank (3).

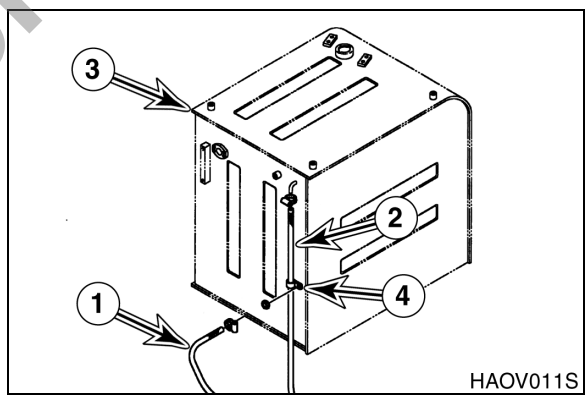

Figure 7

17. Tag and disconnect wires leading to fuel sensor (1, Figure 8) on side of fuel tank (2).
18. If equipped, remove components from the fuel fill pump port (3, Figure 8) on side of fuel tank (2).

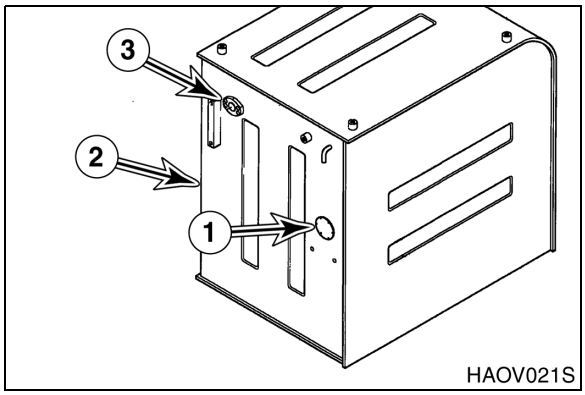

Figure 8

PREVIEW - YOUFIXTHIS.COM

Download full manual at youfixthis.com

Component / Reference Dimensions	Reference	Normal (New) Dimension	Recommended Limit for Maintenance	Limit for Use (Repair - P or Replace - R)
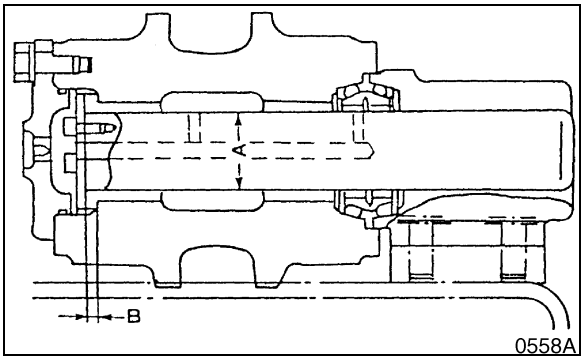 **Figure 9**				
Upper roller, axle	A	40.0 mm (1.57 in)	39.50 mm (1.56 in)	39.20 mm (1.54 in)
Upper roller, bushing	A	40.0 mm (1.57 in)	40.50 mm (1.59 in)	41.0 mm (1.61 in)
Axle bushing, clearance			1.0 mm (0.04 in)	1.20 mm (0.05 in)
Upper roller, axle	B			
Bushing flange thickness	B	4.75 mm (0.19 in)		
Upper roller 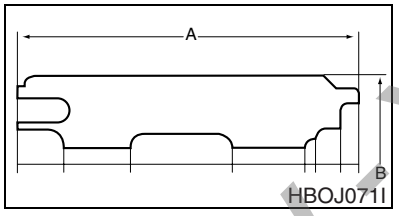 **Figure 10**	A	160.0 mm (6.30 in)		
	B	116.0 mm (4.57 in)	110.0 mm (4.33 in)	106.0 mm (4.17 in)

PREVIEW YOUFIXTHIS.COM

Download full manual at youfixthis.com

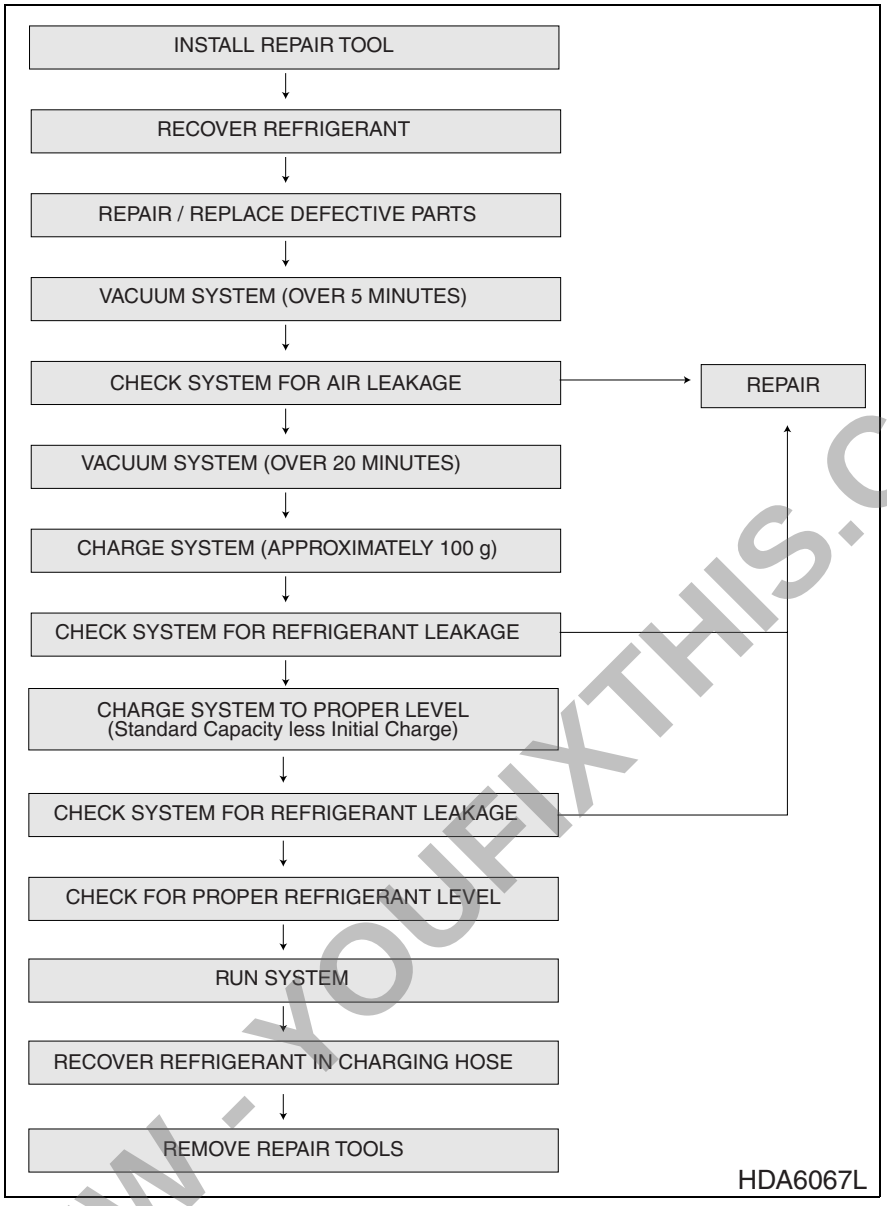

Figure 16

PREVIEW - YOUFIXTHIS.COM

Download full manual at youfixthis.com

PUMP INPUT POWER CONTROL

PUMP REGULATOR ADJUSTMENT

⚠ WARNING!

This procedure should be done with two people. To reduce the chance of accident or unintended start-up, one person should remain at the operator's control stand while checks and adjustments are made.

To perform these adjustments accurately the use of a flow meter is strongly recommended, as is consulting the factory (before starting work) to validate the need for making regulator adjustments. Vent hydraulic pressure from the reservoir before breaking the seal on fittings to install the flow meter kit. (Refer to the "Flow meter Installation and Testing" procedure.)

IMPORTANT

Before starting this procedure or going on to make any changes of adjustment settings,

- **Verify engine output to the rated speed – 2,050 ±50 rpm.**
- **Permanently mark setscrew positions at the current regulator control setting.**

Use a scribe or other permanent marker to identify a reference point on adjusting screws with a corresponding reference on the body of the valve. The adjustment process affects a complex balance and could require some time to complete. If adjustment has to be interrupted or postponed, reference marks at the adjustment point allow immediate restoration of original performance.

This adjustment procedure is normally performed:

- If the engine is being consistently overloaded (and engine troubleshooting shows engine performance to be at or above rated output);
- If reduced cylinder speed and diminished work performance provide an indication that rated, maximum pump flow may not be available (and all other troubleshooting gives no indication of other flaws or hydraulic system defects);
- If pump output is out of balance and one pump is failing to keep up with the output flow of the other.

To check pump imbalance without a flow meter, travel the excavator forward on flat, level terrain. If the machine veers off despite neutral control input and even, balanced track adjustment, the pump which supplies output to the track frame toward which the excavator is veering is weak.

PREVIEW - YOUFIXTHIS.COM

Download full manual at youfixthis.com

MODEL	CYLINDER	øA -0.2	øB -0.2	C 0	D	MODEL (CYLINDER)
DD80L	TILT	35 mm (1.38 in)	47 mm (1.85 in)	0	6 mm (0.24 in)	
	DOZER	45 mm (1.77 in)	57 mm (2.24 in)	0.5 mm (0.02 in)	6 mm (0.24 in)	DD80L (ANGLE)
	ANGLE	45 mm (1.77 in)	57 mm (2.24 in)	0.5 mm (0.02 in)	6 mm (0.24 in)	
S55-V	ARM	55 mm (2.17 in)	69 mm (2.72 in)	5 mm (0.20 in)	6 mm (0.24 in)	
	BOOM	55 mm (2.17 in)	69 mm (2.72 in)	5 mm (0.20 in)	6 mm (0.24 in)	
	BOOM (OP)	55 mm (2.17 in)	69 mm (2.72 in)	5 mm (0.20 in)	6 mm (0.24 in)	
	BUCKET	55 mm (2.17 in)	69 mm (2.72 in)	5 mm (0.20 in)	6 mm (0.24 in)	
	SWING	40 mm (1.58 in)	52 mm (2.05 in)	3.5 mm (0.14 in)	6 mm (0.24 in)	S55W-V (SWING)
	DOZER	60 mm (2.36 in)	74 mm (2.91 in)	7 mm (0.28 in)	6 mm (0.24 in)	
S70-III	ARM	65 mm (2.56 in)	79 mm (3.11 in)	5.5 mm (0.22 in)	6 mm (0.24 in)	S80W-III (ARM)
	BOOM	70 mm (2.76 in)	84 mm (3.31 in)	5.5 mm (0.22 in)	6 mm (0.24 in)	S80W-III (BOOM) S130W-V (BOOM) S130LC-V (BOOM) S140LC-V (BOOM) MEGA 160-III (BUCKET)
	BUCKET	55 mm (2.17 in)	69 mm (2.72 in)	5 mm (0.20 in)	6 mm (0.24 in)	S55-V (ARM, BOOM, BOOM (OP), BUCKET) S55-V PLUS (BUCKET, SWING) S55W-V (ARM) S75-V (BUCKET) S80W-III (BUCKET) MEGA 130-III (LIFT)
	DOZER	60 mm (2.36 in)	74 mm (2.91 in)	5 mm (0.20 in)	6 mm (0.24 in)	S55W-V (BOOM) S55-V PLUS (ARM, BOOM) S75-V (ARM, SWING DOZER) S140W-V (DOZER) S160W-V (DOZER) MEGA 130-III (BUCKET) MEGA 160-III (LIFT) MEGA 200-III TC (BUCKET)
S75-V	BOOM	70 mm (2.76 in)	84 mm (3.31 in)	5 mm (0.20 in)	6 mm (0.24 in)	

PREVIEW - YOUFIXTHIS.COM

Download full manual at youfixthis.com

CLEANING AND INSPECTION (WEAR LIMITS AND TOLERANCES)

Inspect all components and precision surfaces, to confirm that they haven't been worn beyond service limits. Refer to table below for dimensional specifications.

All parts should be cleaned, air-dried and relubricated with clean, approved type hydraulic fluid, before final reassembly or as the final step after the unit has been put back together.

Replacement of all O-rings and oil seals with new parts is generally recommended, unless motor has had minimal use. Inspect O-rings and oil seals very carefully for cuts, nicks, brittleness or softness, or any other type of damage or distortion, before final reassembly.

NOTE: *When parts exceed the standard, replace them. When there is conspicuous surface damage, it is always safer to replace parts, whether standards are exceeded or not.*

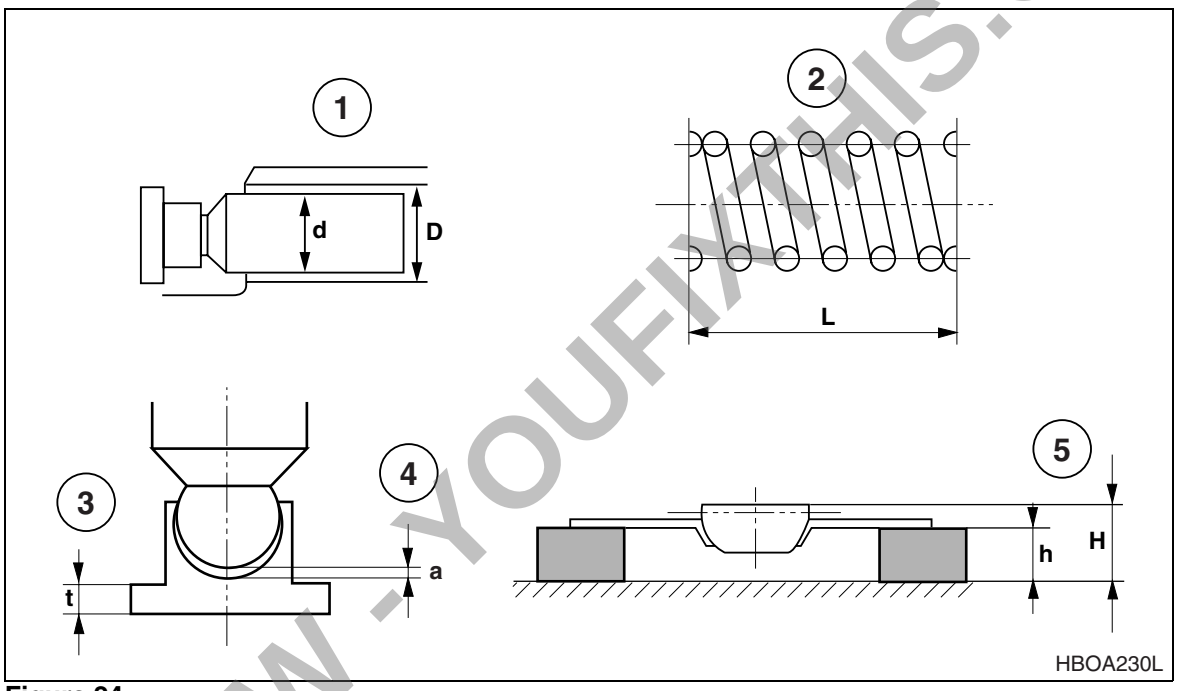

Figure 24

NOTE: *Spherical bushing and push plate must always be replaced as a set. If either one requires replacement, replace the other*

1. Clearance Between Piston and Cylinder Bore (D-d)
2. Spring Free Length (L)
3. Thickness of Shoe (t)
4. Piston Ball - Shoe Socket Clearance (a)
5. Height Between Round Bushing and Push Plate (H-h)

PREVIEW - YOUFIXTHIS.COM

Download full manual at youfixthis.com

E. Remove piston assembly which consists of the piston and shoe, retainer plate, thrust ball, washer and three needles.

NOTE: *Do not disassemble cylinder roller bearing (171, Figure 12) and oil seal (132).*

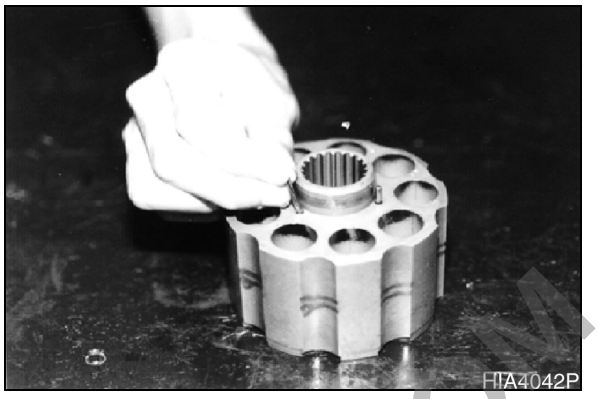

Figure 41

F. Remove swash plate (103, Figure 12) from inside of shaft and remove shaft.

G. Remove two pivots and two parallel pins from shaft.

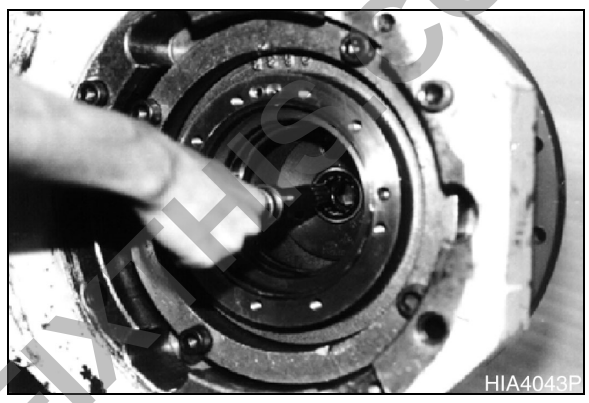

Figure 42

H. Remove high speed gear piston assembly made up of the piston and the shoe, and spring from shaft.

NOTE: *Piston and shoe are replaced as an assembly.*



Figure 43

PREVIEW - YOUFIXTHIS.COM

Download full manual at youfixthis.com

DISASSEMBLY

GENERAL DISASSEMBLY

This procedure assumes that the main pump assembly will be removed from the upper deck plate. Use the eyebolts in the center valve block assembly to move the valve block and the assembled pumps (still bolted together) to the prepared work area.

The area where the pumps are to be rebuilt should be well lighted, clean and protected from dust and/or wind gusts that could carry in dust or grit. Use a rubber mat or other protective covering on the workbench area to prevent damage or scratching of any precision machined components.

IMPORTANT

Clean all of the exterior surfaces of the pump before disassembly. There should not be any visible dirt, grease or other type of accumulation on the outside of the pump case. Clean off or blow dry all traces of cleaner and solvent before starting work.

Open the drain plugs to drain oil from the pump cases before disassembly.

IMPORTANT

If at all possible, use a clean, dry container to catch gear oil. A clean container allows an evaluation to be made of the used oil. The presence or relative lack of metal wear shavings in the used oil or obvious deterioration or contamination of the oil can provide a useful indicator of the pumps' general condition.

NOTE: *Used oil is an environmental contaminant and should be disposed of promptly at approved recycling facilities. Prolonged physical contact with used oil has been thought by some to pose a health risk. Clean oil residue from hands and clothing promptly, and do not allow used oil containers to accumulate.*

NOTE: *Main Pump component parts (numbered in parentheses) are keyed to Figure 14.*

NOTE: *Dispose of drained fluids according to local regulations.*

1. Loosen socket bolts (412, 413) to begin separation of regulator valves from two pumps.

   NOTE: *See "Pump Regulator Disassembly" on page 22 of this section for disassembly procedures.*

2. Unbolt gear pump (rear pilot pump) at rear of main pump assembly.

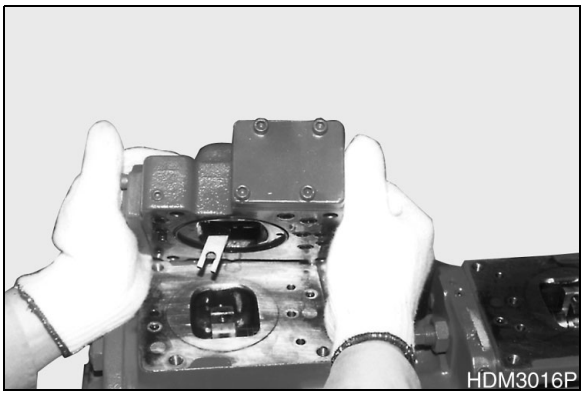

Figure 16

PREVIEW - YOUFIXTHIS.COM

Download full manual at youfixthis.com

Boom Load Holding Valve

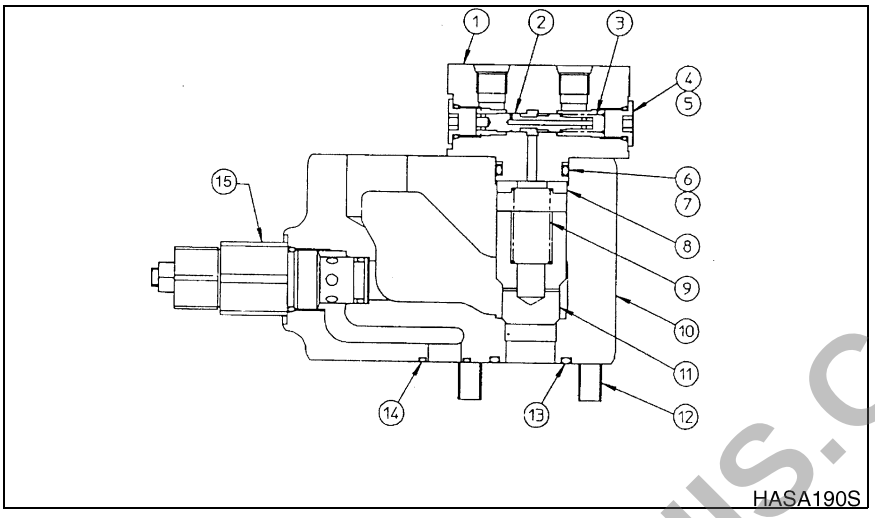

Figure 30

Reference Number	Description
1	Cover
2	Spool
3	Spring
4	Cap
5	O-ring
6	Backup Spring
7	O-ring
8	Spring Seat

Reference Number	Description
9	Spring
10	Manifold
11	Poppet
12	Bolt With Hole
13	O-ring
14	O-ring
15	Relief Valve

Boom Unity Check

Reference Number	Description
1	Cap
2	O-ring
3	Spring
4	Check

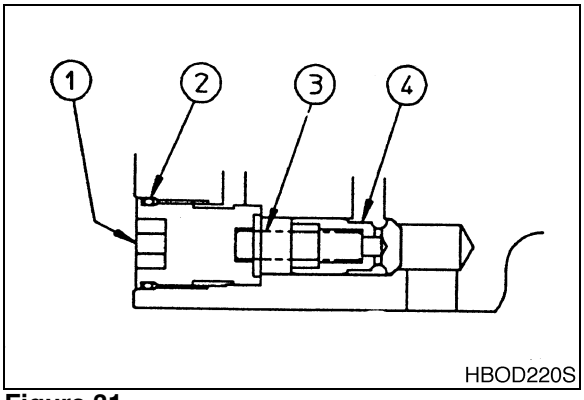

Figure 31

PREVIEW - YOUFIXTHIS.COM

Download full manual at youfixthis.com

IMPORTANT

When disassembling Check Valves, tag and label each component so that all parts can be reassembled in the proper order.

A: Check Valve [TR, AM2]

Reference Number	Description
1	Cap
2	Spring
3	Check

Cap hole size	12 mm
Tightening torque	15 kg•m

1. Loosen cap (1), remove spring (2) and check (3).

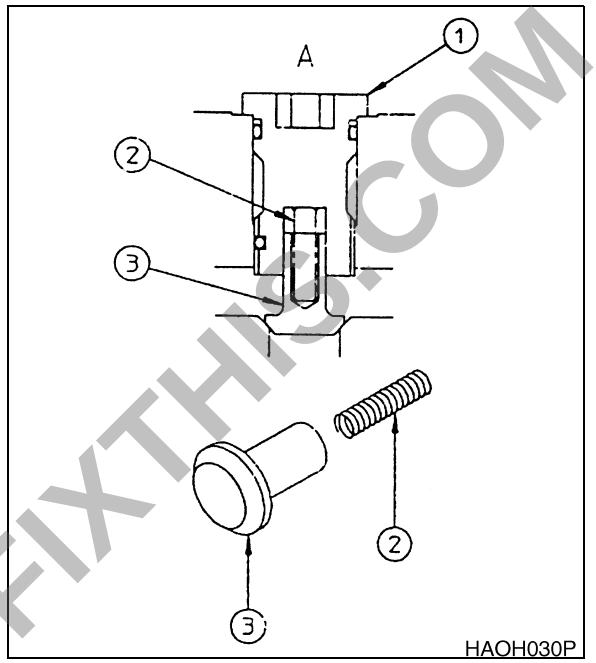

Figure 111

B: Check Valve [OPT, BKT, BM1, BM2]

Reference Number	Description
1	Cap
2	Spring
3	Check

Cap hole size	12 mm
Tightening torque	15 kg•m

1. Loosen cap (1), remove spring (2) and check (3).

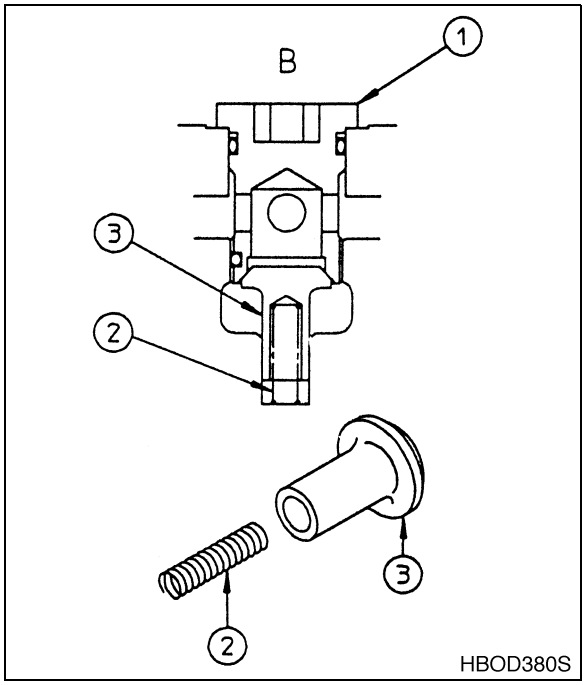

Figure 112

PREVIEW - YOUFIXTHIS.COM

Download full manual at youfixthis.com

CLEANING AND INSPECTION (WEAR LIMITS AND TOLERANCES)

1. Cleaning disassembled parts.
    1. Place parts in a container with cleaning solvent.
    - Allow all parts to soak in solvent until grease and other foreign substances have dissolved and become loose, before cleaning.
    - Contaminated cleaning solvent may cause damage to parts and may cause poor equipment performance. Be sure to use clean, uncontaminated solvent when cleaning precision parts.
    2. Clean parts thoroughly by gently turning the solvent. Dry and clean each part with a clean cloth.
    - Do not use compressed air to dry parts. Foreign material and moisture present in compressed air may cause damage or rust.
2. Anticorrosive treatment of disassembled parts.

    Apply an anticorrosive lubricant to all disassembled parts.
    - Leaving cleaned parts exposed to contaminants and moisture in the air will cause rust and may cause poor equipment performance.

PREVIEW - YOUFIXTHIS.COM

Download full manual at youfixthis.com

GRAPHIC INFORMATION AREA DISPLAY

OVERVIEW

Many kinds of condition of machine are displayed on the letter information display department. The information display department is divided into two menus. One is main menu for user and the other is special menu for specialist. These menus can be moved from normal display mode by the combination of select buttons.

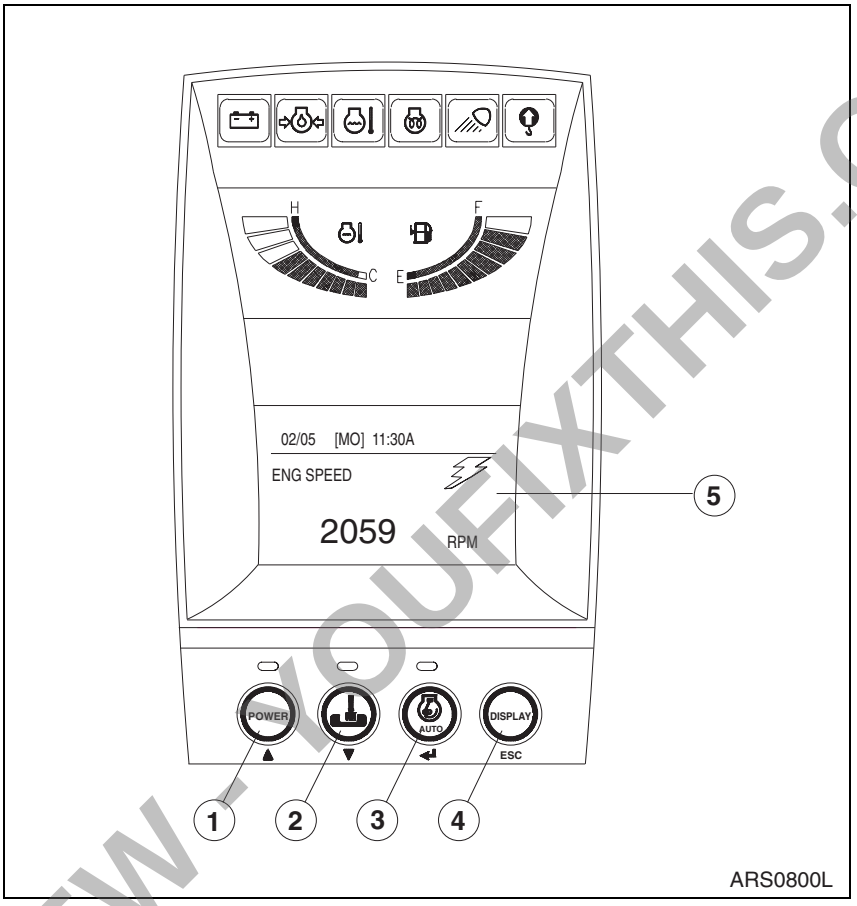

Figure 12

Selector Buttons	Graphic Display Area
1. Up Arrow Button	5. Letter Information Display Department
2. Down Arrow Button	
3. Enter Button	
4. Escape Button	

PREVIEW - YOUFIXTHIS.COM

Download full manual at youfixthis.com

AUTOMATIC TRAVEL SPEED CONTROL

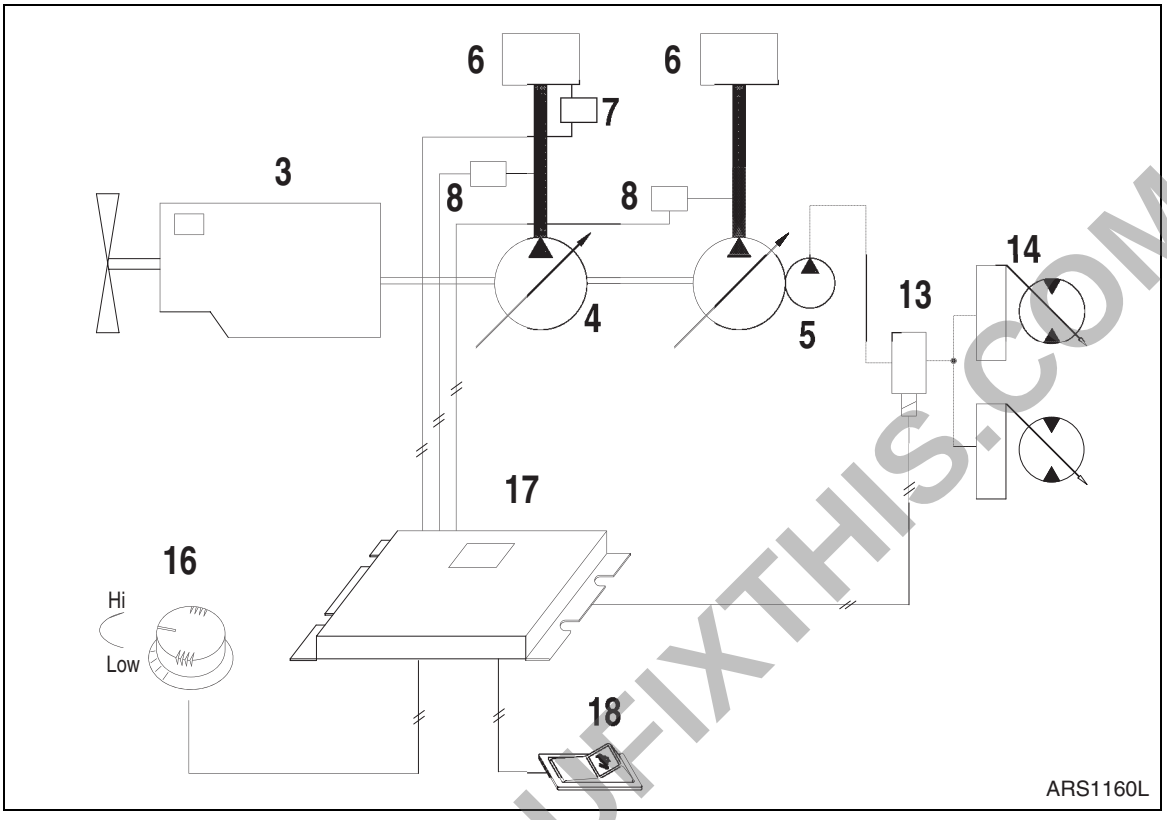

Figure 60

Reference Number	Description
3	Engine
4	Main Pump
6	Control Valve
7	Pressure Switch (Py)
8	Pump Pressure Sensor

Reference Number	Description
13	Solenoid Valve (High speed)
14	Travel Motor
16	Engine Control Dial
17	e-EPOS Controller
20	Selector Switch for Automatic Travel

If the automatic travel speed control switch is set to the "OFF" position, the travel motor will run in the I-speed (low speed) range. If the selector switch is set to the "I" position, the travel motor will run in the II-speed (high speed) range. If the selector switch is set to the "II" position, the e-EPOS controller will monitor the main pump discharge pressure and automatically select the "ON" - "OFF" status of the II - speed travel solenoid valve based on the travel load. The travel speed is changed between the I-speed and the II-speed mode.

The travel load is monitored by the two pressure sensors in the discharge lines of the front (upper) and rear (lower) pumps. When the travel load is high (pressure over 300 kg/cm^2 (4,300 psi) the solenoid valve is turned "OFF" and I-speed (low) is selected. In the case when the travel load is low (pressure under 160 kg/cm^2 (2,280 psi), the solenoid valve will be turned "ON" and the II-speed will be selected. But, if the engine speed control switch dial is set below approximately 1400 rpm, the travel speed will be set to I-speed mode.

PREVIEW - YOUFIXTHIS.COM

Download full manual at youfixthis.com

PREVIEW ONLY

You're viewing 25 of 636 pages

The full manual includes:

- All 636 pages, complete
- Searchable PDF (find any keyword)
- No watermarks
- Instant download
- Print-ready quality

GET FULL MANUAL NOW

Daewoo Solar 140LC-V Shop Manual

Scan or click anywhere
youfixthis.com

Click anywhere on this page to get the full manual