Solar 170LC-V

Shop Manual

023-00032E

Serial Number 1001 and Up

October 2000

PREVIEW - YOUFIXTHIS.COM

Daewoo reserves the right to improve our products in a continuing process to provide the best possible product to the market place. These improvements can be implemented at any time with no obligation to change materials on previously sold products. It is recommended that consumers periodically contact their distributors for recent documentation on purchased equipment.

This documentation may include attachments and optional equipment that is not available in your machine's package. Please call your distributor for additional items that you may require.

Illustrations used throughout this manual are used only as a representation of the actual piece of equipment, and may vary from the actual item.

Download full manual at youfixthis.com

TABLE OF CONTENTS

Safety

Track Excavator Safety.....S0102000

Specifications

Specifications for Solar 170LC-V.....S0205030

General Maintenance

General Maintenance Procedures.....S0302000

Standard Torques.....S0309000

Upper Structure

Cab.....S0402000

Counterweight.....S0403000

Fuel Tank.....S0405080

Fuel Transfer Pump.....S0405500

Swing Bearing.....S0407000

Swing Reduction Gearbox.....S0408050

Lower Structure and Chassis

Track Assembly.....S0505110

Engine and Drive Train

Air-Conditioner.....S0605010

Drive Coupling (Main Pump).....S0609000

Hydraulics

Hydraulic System Troubleshooting, Testing and Adjustment.....S0702130

Accumulator.....S0703000

Center Joint (Swivel).....S0704010

Cylinders.....S0705000

PREVIEW - YOUFIXTHIS.COM

Download full manual at youfixthis.com

TRACK EXCAVATOR SAFETY

CAUTION!

Follow all safety recommendations and safe shop practices outlined in the front of this manual or those contained within this section.

Always use tools and equipment that is in good working order.

Use lifting and hoisting equipment capable of safely handling load.

Remember, that ultimately safety is your own personal responsibility.

MODEL	SERIAL NUMBER RANGE
Solar 130LC-V	0001 and Up
Solar 220LC-V	0001 and Up
Solar 170LC-V	1001 and Up
Solar 220N-V	1001 and Up
Solar 250LC-V	1001 and Up
Solar 290LC-V	0001 and Up
Solar 330LC-V	1001 and Up
Solar 400LC-V	1001 and Up
Solar 450LC-V	1001 and Up

PREVIEW - YOUFIXTHIS.COM

Copyright 2000 Daewoo

October 2000

Download full manual at youfixthis.com

GENERAL SPECIFICATIONS

Shipping Weight	17 metric tons (18.74 tons), includes 10% fuel, boom, 2,600 mm (8' - 6") arm, standard bucket and standard shoes
Operating Weight	Add weight of full fuel tank and operator.
Shipping Weights With Optional Track Shoes	Add 225 kg (500 lb) for 700 mm (28") shoes
	Add 675 kg (1,490 lb) for 900 mm (35") shoes
Major Component Weights	Standard Boom 1,082 kg (2,390 lbs)
	2,200 mm (7' - 3") Arm 530 kg (1,170 lbs)
	2,600 mm (8' - 6") Arm 546 kg (1,200 lbs)
	3,100 mm (10' - 2") Arm 632 kg (1,390 lbs)
	Boom Cylinders 152 kg (335 lbs) each
	Arm Cylinder 217 kg (480 lbs)
	Bucket Cylinder 144 kg (317 lbs)
	Counterweight 2,900 kg (6,390 lbs)
	Upper Turntable 7,660 kg (16,890 lbs)
	Lower - below Swing Bearing 6,190 kg (13,650 lbs)
Digging Forces	
Bucket Cylinder	11,300 kg (24,910 lbs) with 2,200 mm (7' - 3") arm
	11,300 kg (24,910 lbs) with 2,600 mm (8' - 6") arm
	11,300 kg (24,910 lbs) with 3,100 mm (10' - 2") arm
Arm Cylinder	10,700 kg (23,590 lbs) with 2,200 mm (7' - 3") arm
	9,200 kg (20,280 lbs) with 2,600 mm (8' - 6") arm
	8,200 kg (18,080 lbs) with 3,100 mm (10' - 2") arm
Fuel Tank Capacity	280 liters (74 U.S. gal.)
Hydraulic System Capacity	200 liters (53 U.S. gal.)
Hydraulic Reservoir Capacity	150 liters (40 U.S. gal.)
Bucket Heaped Capacity Range	PCSA 0.70 - 0.61 cu. m (0.92 - 0.80 cu. yd.) **IMPORTANT:** Refer to the Load Weight, Bucket and Arm Length Compatibility Table for information on which bucket sizes may be used safely with which arm length, for load material weights.
Shoe Type	Triple Grouser
Shoe Width and Optional Sizes	500 mm (19.69") - Optional
	600 mm (23.62") - Standard
	700 mm (27.56") - Optional
	900 mm (35.43") - Optional
Ground Pressure Ratings	
Optional 500 mm (19.69") Shoe	0.49 kg/sq cm (6.97 psi)
Standard 600 mm (23.62") Shoe	0.41 kg/sq cm (5.83 psi)
Optional 700 mm (27.56") Shoe	0.36 kg/sq cm (5.12 psi)
Optional 900 mm (35.43") Shoe	0.28 kg/sq cm (3.98 psi)

PREVIEW - YOUFIXTHIS.COM

Download full manual at youfixthis.com

REMOVAL

⚠ CAUTION!

Avoid disassembling cab if there are strong wind gusts, which could catch large surface area of cab shell and push it sideways during lift.

1. Park on firm and level ground.
2. Lower bucket to ground.
3. Shut engine down and remove key from starter switch.

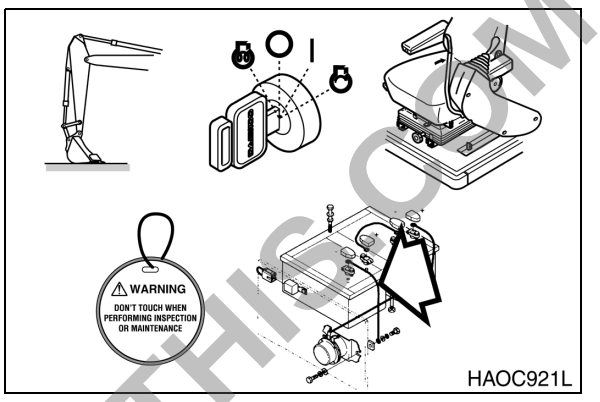

Figure 1

⚠ WARNING!

If engine must be run while performing maintenance, use extreme care. Always have one person in the cab at all times. Never leave the cab with the engine running.

4. Set safety lever on "LOCK" position.
5. Hang maintenance warning tag on controls.
6. Disconnect negative (-) battery cable leading to frame from battery.
7. Prepare cab shell for removal by disconnecting wiring connectors for:
   - A. Cab interior lighting.
   - B. External light wiring.
   - C. Radio antenna and connections.
   - D. Wiper/washer connections.

NOTE: *Control console wiring harnesses and hydraulic piping lines that pass through the floor of the cab do not need to be disassembled.*

NOTE: *If unit is equipped with a cab protective structure (for forestry, or hazardous working conditions), it must be removed.*

PREVIEW - YOUFIXTHIS.COM

Download full manual at youfixthis.com

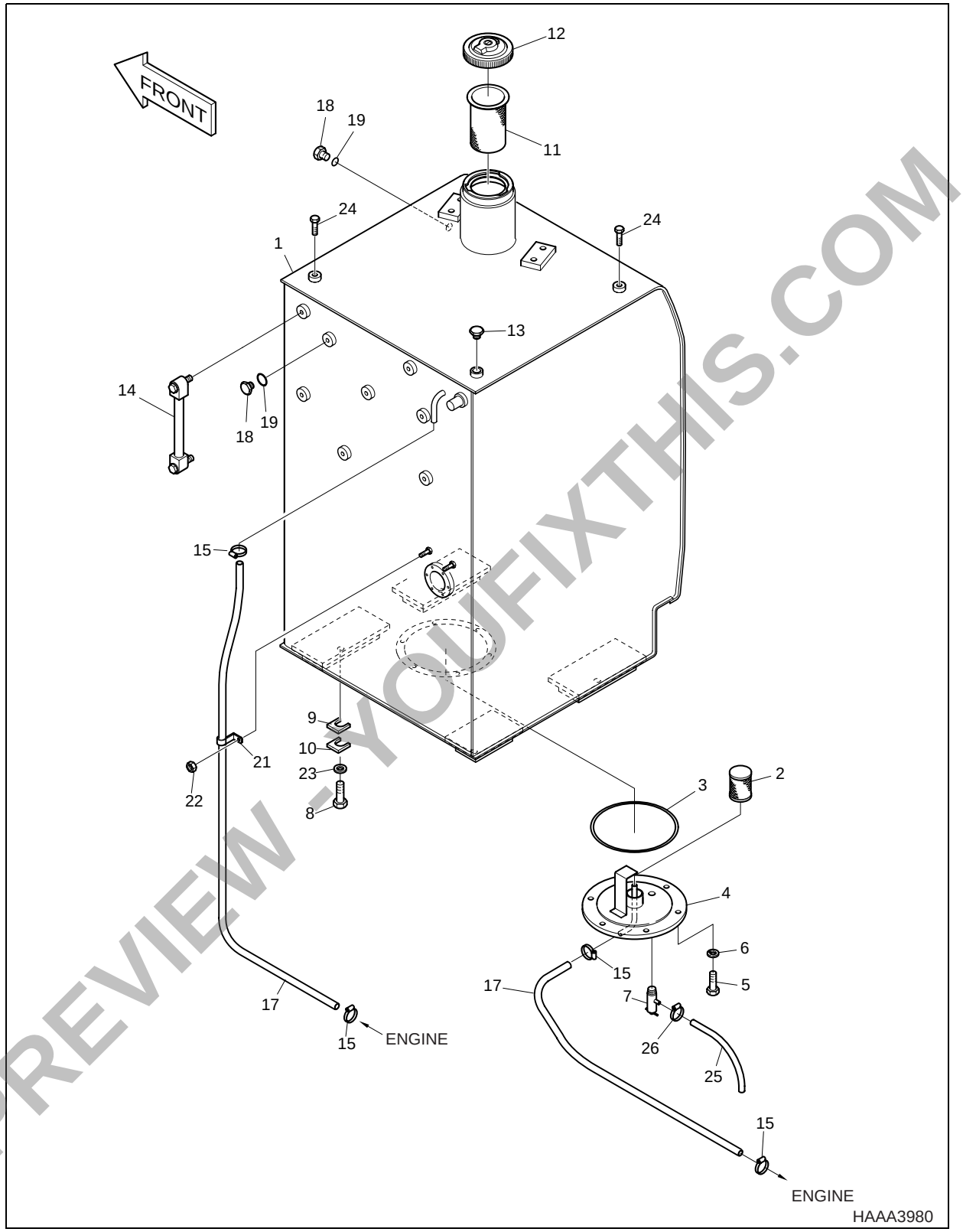

Figure 1

PREVIEW - YOUFIXTHIS.COM

Download full manual at youfixthis.com

SOLAR 170LC-V (OLD STYLE CENTER JOINT)

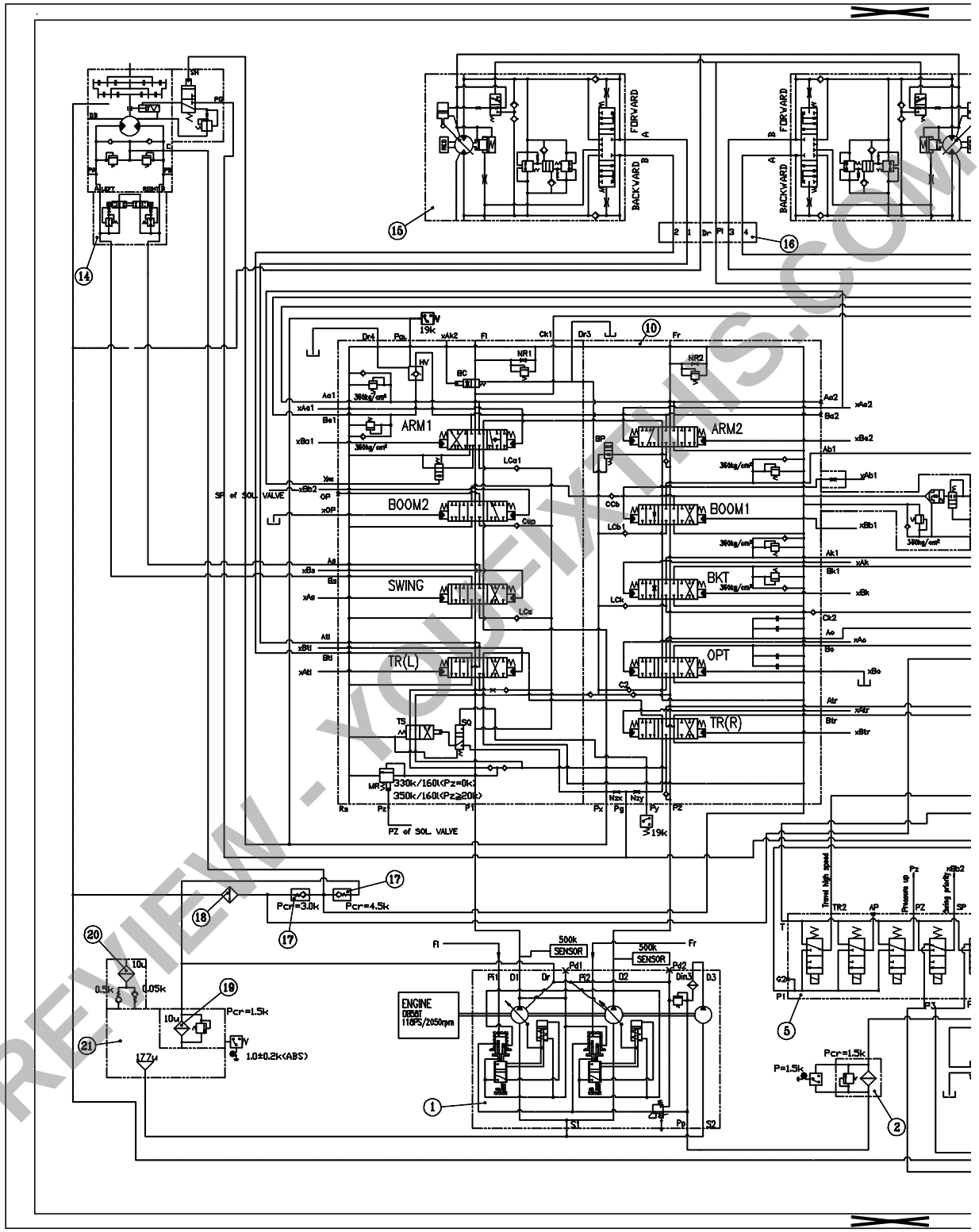

Figure 2

PREVIEW - YOUFIXTHIS.COM

Download full manual at youfixthis.com

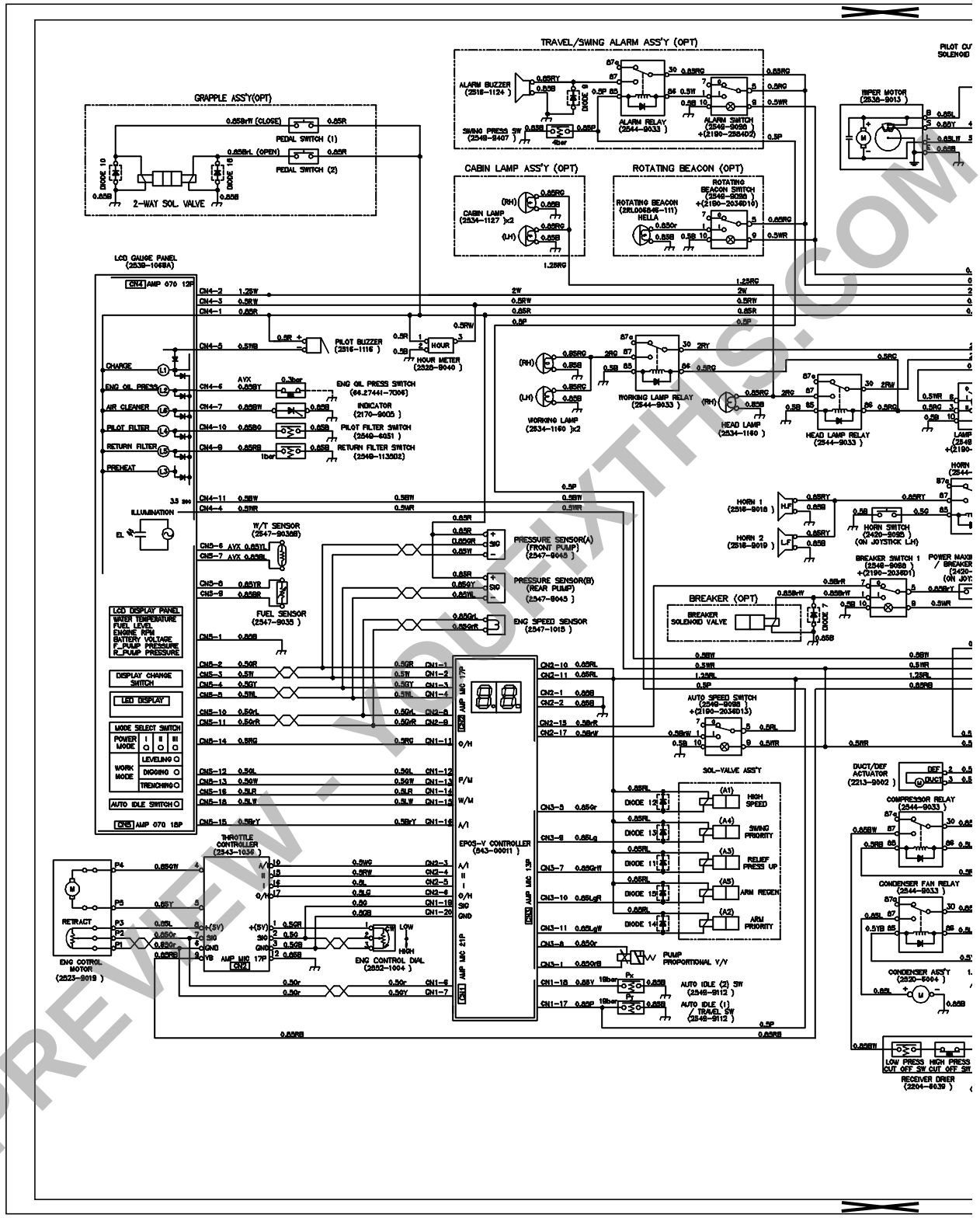

Figure 2

PREVIEW - YOUFIXTHIS.COM
Download full manual at youfixthis.com

PREVIEW - YOUFIXTHIS.COM

Download full manual at youfixthis.com

Dimension	5.15 m (16' - 11") Boom With 2.20 m (7' - 3") Arm	5.15 m (16' - 11") Boom With 2.60 m (8' - 6") Arm	5.15 m (16' - 11") Boom With 3.10 m (10' - 2") Arm
I	3,140 mm (10' - 4")	3,170 mm (10' - 5")	3,380 mm (11' - 1")
J	1,245 mm (4' - 1")	1,245 mm (4' - 1")	1,245 mm (4' - 1")
K	1,245 mm (4' - 1")	1,245 mm (4' - 1")	1,245 mm (4' - 1")
L	2,930 mm (9' - 7")	2,930 mm (9' - 7")	2,930 mm (9' - 7")
M	600 mm (2' - 0")	600 mm (2' - 0")	600 mm (2' - 0")
N	2,200 mm (7' - 3")	2,200 mm (7' - 3")	2,200 mm (7' - 3")
O	2,800 mm (9' - 2")	2,800 mm (9' - 2")	2,800 mm (9' - 2")
P	460 mm (1' - 6")	460 mm (1' - 6")	460 mm (1' - 6")

PREVIEW - YOUFIXTHIS.COM

Download full manual at youfixthis.com

TORQUE VALUES FOR STANDARD U.S. FASTENERS

TYPE	S.A.E. GRADE	DESCRIPTION	BOLT HEAD MARKING
1	1 OR 2	WILL HAVE NO MARKINGS IN THE CENTER OF THE HEAD Low or Medium Carbon Steel Not Heat Treated	
5	5	WILL HAVE THREE RADIAL LINES Quenched and Tempered Medium Carbon Steel	
8	8	WILL HAVE 6 RADIAL LINES Quenched and Tempered Special Carbon or Alloy Steel	

Recommended torque, in foot pounds, for all Standard Application Nuts and Bolts, provided:

1. All thread surfaces are clean and lubricated with SAE-30 engine oil (See Note.)
2. Joints are rigid, that is, no gaskets or compressible materials are used.
3. When reusing nuts or bolts, use minimum torque values.

NOTE: *Multiply the standard torque by:*

0.65 when finished jam nuts are used.

0.70 when Molykote, white lead or similar mixtures are used as lubricants.

0.75 when parkerized bolts or nuts are used.

0.85 when cadmium plated bolts or nuts and zinc bolts w/waxed zinc nuts are used

0.90 when hardened surfaces are used under the nut or bolt head.

NOTE: *When reusing bolts and nuts in service, use minimum torque values.*

PREVIEW - YOUFIXTHIS.COM

Download full manual at youfixthis.com

8. Clean area around fuel tank fill cap (Figure 5). Open fuel cap.
9. Remove access cover from under fuel tank.

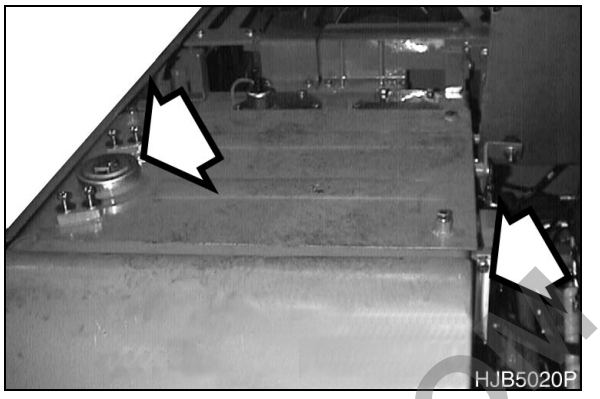

Figure 5

10. Place a large enough container under the tank to collect remaining fuel. Open the drain valve (Figure 6) at the bottom of the tank and empty the tank.

    NOTE: *Refer to "Specifications" on page 5, for fuel tank capacity.*



Figure 6

11. Tag and disconnect fuel supply line (1, Figure 7) and fuel return line (2) from the tank (3) and carefully drain remaining fuel from the lines.
12. Remove clamp (4, Figure 7) holding fuel return line (2) to tank (3).
13. Remove and drain line (5, Figure 7) from bottom of tank (3).
14. Tag and disconnect wires leading to fuel sensor (6, Figure 7) on side of fuel tank (3).
15. If equipped, remove components from the fuel filler pump port (7, Figure 7) on side of fuel tank (2).

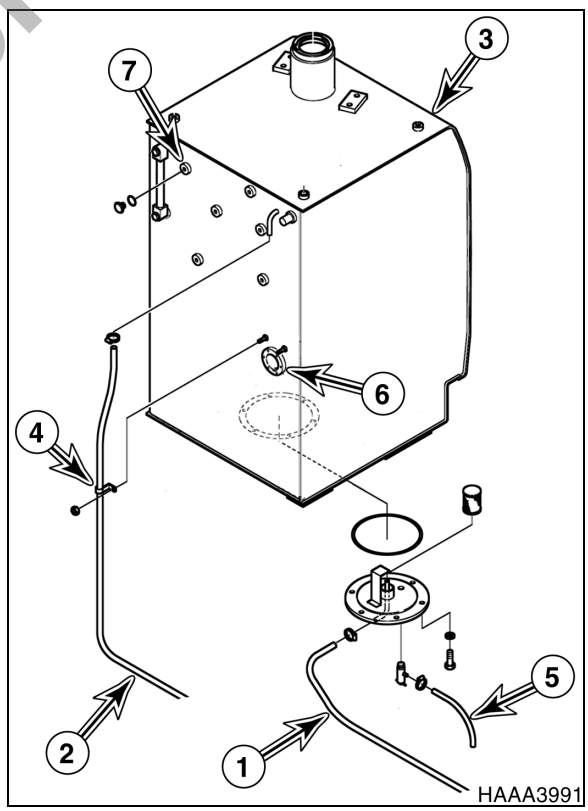

Figure 7

PREVIEW - YOUFIXTHIS.COM

Download full manual at youfixthis.com

PREVIEW - YOUFIXTHIS.COM

Download full manual at youfixthis.com

REFRIGERANT CIRCULATION

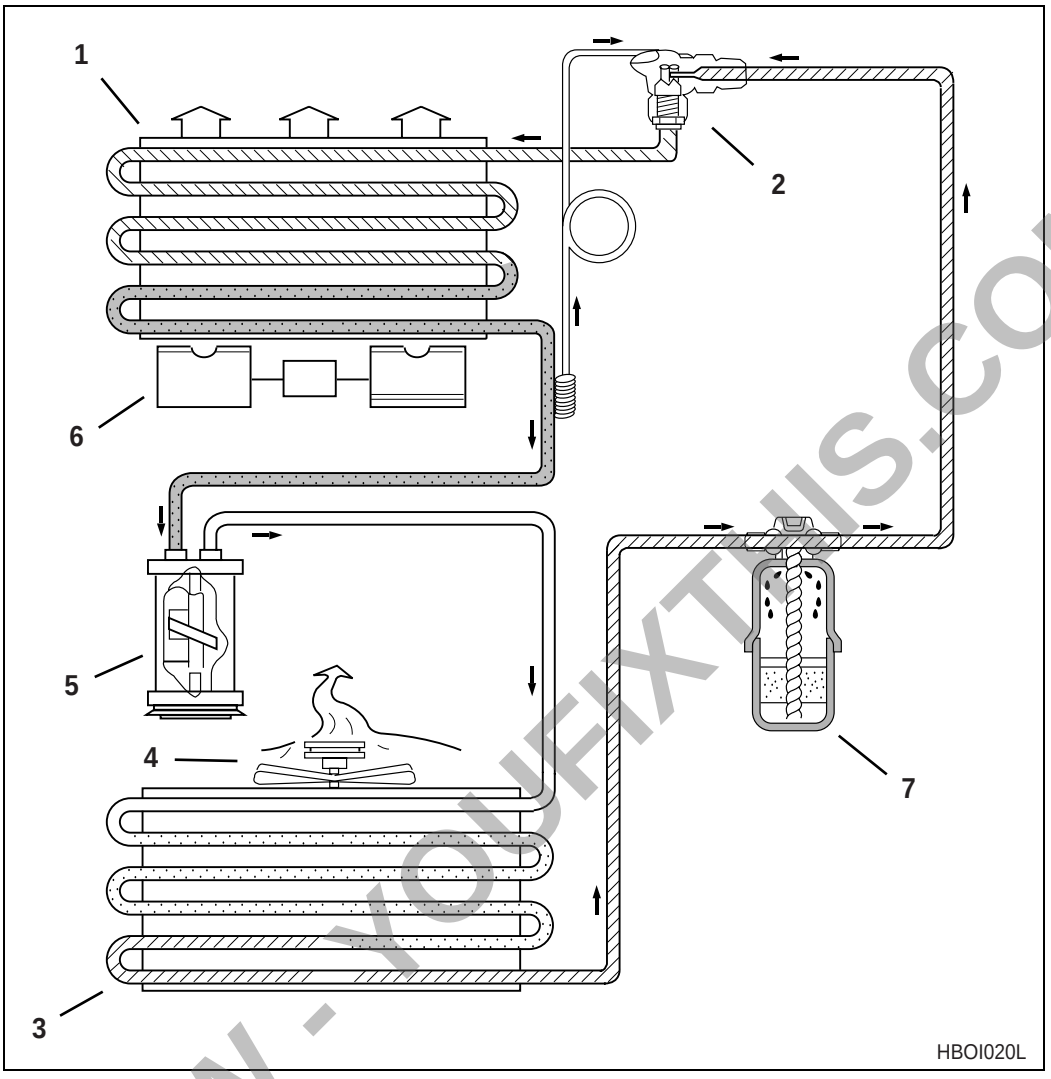

Figure 1

Reference Number	Description
1	Evaporator
2	Expansion Valve
3	Condenser
4	Condenser Fan

Reference Number	Description
5	Compressor
6	Blower Fan
7	Receiver Dryer

PREVIEW - YOUFIXTHIS.COM

Download full manual at youfixthis.com

HYDRAULICS

PREVIEW - YOUFIXTHIS.COM

Download full manual at youfixthis.com

Reference Number	Description
1	Nitrogen Cylinder Fitting
2	Hose, 3 Meters (10 ft.) Long
3	Check Valve
4	Pressure Gauge
5	Sealing Nut
6	Accumulator

Reference Number	Description
7	Cylinder to Accumulator Adapter
8	Nitrogen Bleeder Valve
9	Nut O-ring
10	Protective Cap
11	Protective Plug
12	Sealing Ring

2. Clean area around seal ring (12).
3. Thread the sealing nut (5, Figure 3) of adapter (7) onto accumulator. Tighten adapter securely. Close nitrogen bleeder vale (8).
4. Thread nitrogen cylinder fittings (1, Figure 3) onto nitrogen cylinder.
5. Open valve on nitrogen cylinder and charge accumulator to a appropriate pressure (P1). Close valve on nitrogen cylinder.

   NOTE: *Wait 2 or 3 minutes for nitrogen to warm to ambient temperature. This will stabilize pressure.*
6. Slowly open nitrogen bleeder valve (8). Open valve (8) until gauge (4) reading is equal to primary pressure. Close bleeder valve.
7. Unscrew adapter (7, Figure 3) from accumulator (6).
8. Thread protective plug (11, Figure 3) into accumulator. Tighten to 3 kg•m (22 ft lbs).
9. Check for nitrogen leaks around protective plug (11, Figure 3). Coat area around protective plug (11) with soapy water. If soap bubbles form, retighten protective plug (11).
10. Install protective cap (10, Figure 3) on accumulator.

⚠ WARNING!

Accumulator store nitrogen under high pressure. Before replacing an accumulator, install an adapter (7) with a bleeder valve (8) on the accumulator. Slowly and carefully bleed off all nitrogen before removing the accumulator from the hydraulic system.

NOTE: *After an accumulator has been installed, or after an accumulator has been recharged with (P1) after the first week of operation. Check for a pressure drop due to leaks. If no pressure drop is found after the first week, check again after 3 more weeks. If no pressure drop is found after 3 weeks, check after one year.*

PREVIEW - YOUFIXTHIS.COM

Download full manual at youfixthis.com

RELIEF VALVE

The relief valve is one in a set of two, and is Item "51" of the swing motor assembly.

Return line pressure (the normal pressurization of the hydraulic reservoir, also referred to as "tank pressure") pushes the valve piston to open ports "R" and "P" at the end of the valve whenever the hydraulic system is operating.

This valve initially reacts to the engagement of hydraulic function (and pressurization of the tank) by opening momentarily, so that there is no pressure developed through the valve at all.

Tank pressure at "pressurized area A2" is set against spring pressure inside the valve, opening the relief valve until pressure at the spring chamber ("g") momentarily reduces "g" chamber pressure "Pg." "Pg" subsequently increases until the piston reaches the end of travel inside the valve bore at "h."

After the piston reaches "h" and its normally closed, pressurized operating position, pressure through the valve can be continually increased up to the relief valve maximum pressure ("Ps").

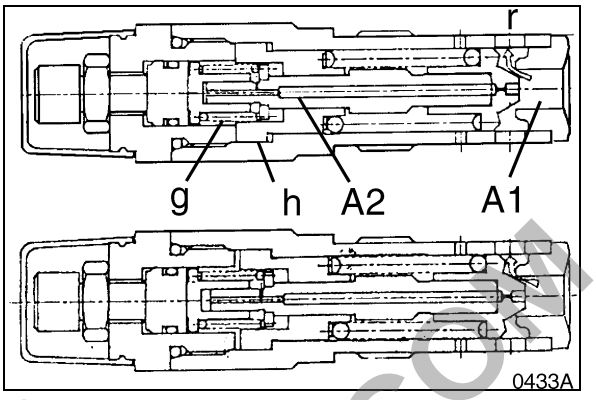

Figure 2

$$Ps = \frac{Fsp}{A_1 - A_2}$$

Where Fsp: Spring Force

SWING BRAKE OPERATION

The swing brake is normally held in the applied position - preventing the upper deck revolving superstructure from rotating - whenever the hydraulic system is not operated (pressurized). The brake system is automatically released whenever the swing controls are engaged to swing in one direction or the other.

PREVIEW - YOUFIXTHIS.COM

Download full manual at youfixthis.com

Reference Number	Description
	Travel Motor
102	Shaft
103	Plate; Swash
104	Block; Cylinder
	Piston and Shoe Ass'y
105	Piston
106	Shoe
107	Plate; Retainer
108	Ball; Thrust
109	Plate; Timing
110	Washer; Plain
111	Collar (Washer)
112	P/piston
113	Spring
114	Spring
115	Plate; Friction
116	Plate; Mating
132	Seal; Oil
135	O-ring
139	O-ring
145	Ring; Snap
149	Bearing; Ball
150	Bearing; Ball
151	Roller
	Piston and Shoe Ass'y
161	Piston (Two Speed)
162	Shoe (Two Speed)
167	Pivot
171	Pin; Parallel
193	Spring
	Relief Valve Ass'y
201	Valve
202	Sleeve
203	Retainer; Spring
204	Plug
205	Shim
208	O-ring 1BP16

Reference Number	Description
209	O-ring 1BP22
210	O-ring 1BP18
211	Ring; Backup
217	Ring; Backup
219	O-ring 1BP29
220	Seal; Piston
301	Flange; Rear
323	Spool
324	Plug
325	Stopper
326	Plug
327	Valve
328	Spring
330	Spring
336	O-ring 1BP32
337	O-ring 1BP22A
341	Pin; Parallel
343	Bolt; Socket M16x40
346	Plug; Pt
352	Plug; Ro
354	Plug; Pt
355	O-ring 1BP18
357	Plug; Ro
358	O-ring 1BP11
359	O-ring 1BP14
363	Spool
366	Spring
368	Ball; Steel
379	Filter
380	Plug
381	Piston
382	Plug
383	O-ring 1BP5
384	O-ring 1BP8
385	Ball; Steel
397	Orifice
398	Plug

PREVIEW - YOUFIXTHIS.COM

Download full manual at youfixthis.com

Measuring Required Spacer Thickness

Reference Number	Description
1	Depth Indicator
2	Testing Jig
3	Hub (1)
4	Coupling Gear (8)
5	Measured Height
6	Jig Height
7	Bearing (24)
8	Spindle (2)

1. The hub spacer ring (12, Figure 13) may require replacement with a spacer of varying thickness if the hub (1), spindle (2) or bearing (24) are replaced.
2. Calculate the required spacer thickness by removing the old spacer, bolting up the assembly and measuring clearance using a depth indicator and testing jig, as shown in Figure 84 and Figure 85.
3. Tighten the assembly retaining bolts (35) and check the measured clearance dimension at point A. The spacer height required for clearance A (shown as X in Figure 84) is determined by subtracting the height of the testing jig (B in Figure 84) from the measured distance, A. Add the recess height of the coupling gear (8), shown as dimension C in Figure 84.

   Hence, if:

   X = A – B

   The required shim thickness (“T”) is determined by the formula:

   T = C + X (± 0.1 mm)

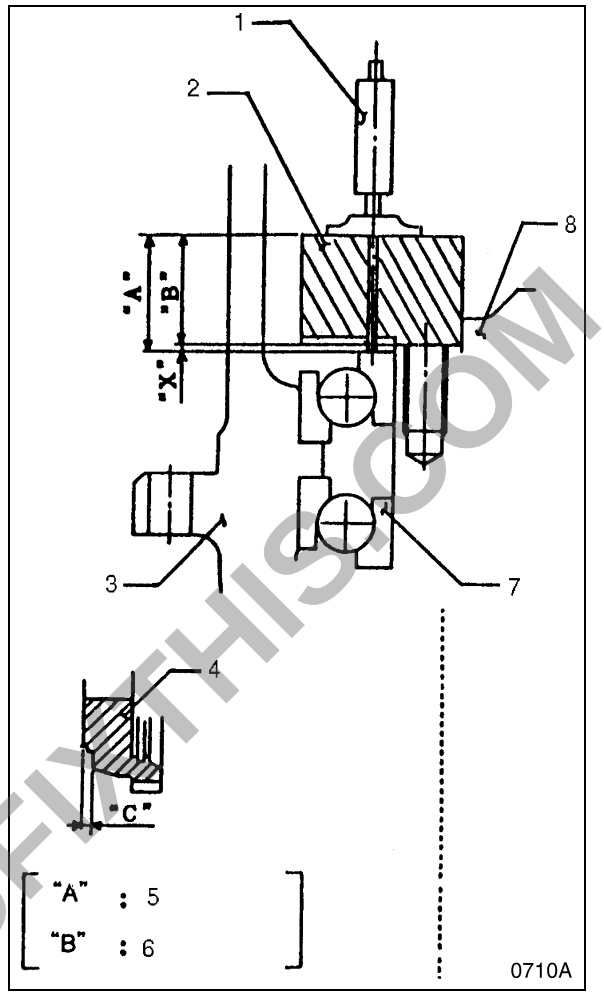

Figure 84



Figure 85

PREVIEW - YOUFIXTHIS.COM

Download full manual at youfixthis.com

19. Install rod RE (77, Figure 41) and piston RE (78) then install jig in screw part (PF1), and tighten setscrew.

20. Detach jig and install spring RE (80, Figure 41) and cap (74).

    NOTE: *Tighten cap to 35.0 kg•m (253 ft lbs).*

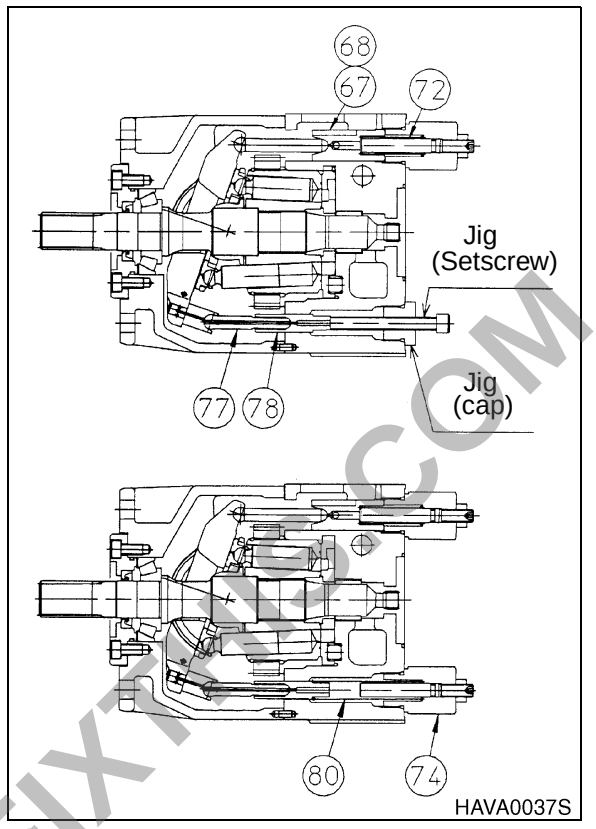

Figure 41

21. Protect spline part with cloth etc.

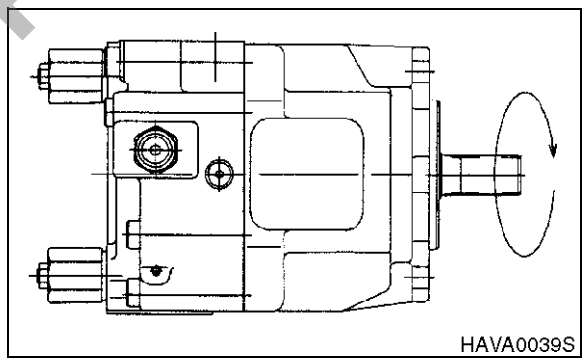

Figure 42

PREVIEW - YOUFIXTHIS.COM

Download full manual at youfixthis.com

Overload Relief Valve

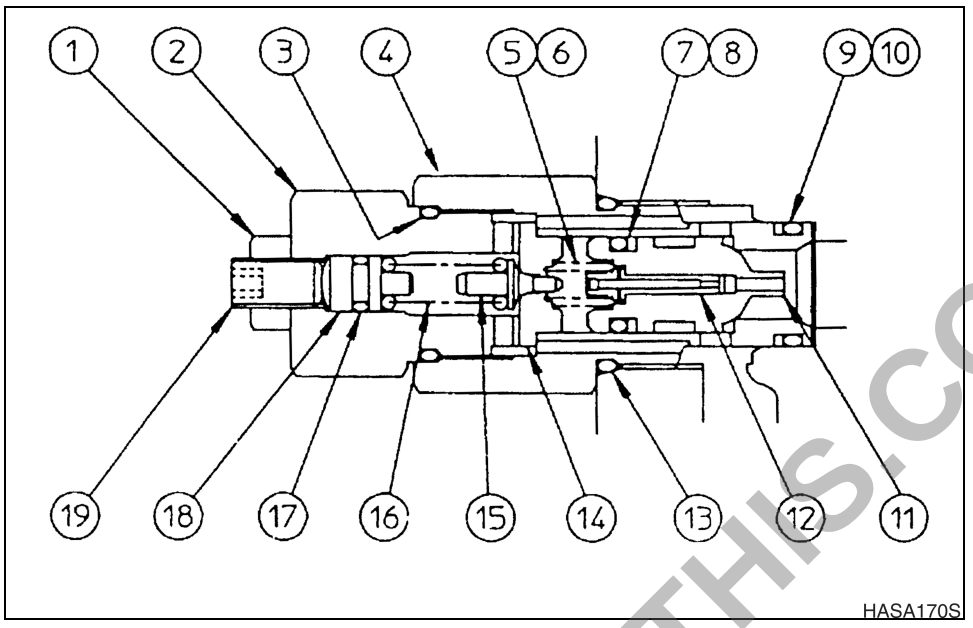

Figure 28

Reference Number	Description
1	Hex Nut
2	Cap
3	O-ring
4	Sleeve
5	Spring
6	Spring
7	O-ring
8	Backup Spring
9	Backup Spring
10	O-ring

Reference Number	Description
11	Main Poppet
12	Piston
13	O-ring
14	Pilot Seat
15	Pilot Poppet
16	Spring
17	O-ring
18	Spring Tray
19	Adjusting Screw

PREVIEW - YOUFIXTHIS.COM

Download full manual at youfixthis.com

IMPORTANT

When disassembling Swing Straight Travel Valve, tag and label each component so that all parts can be reassembled in the proper order.

IMPORTANT

When assembling components, inspect O-rings for any damage and replace as necessary.

Reference Number	Description
1	Cap
2	Stopper
3	Spring
4	Check

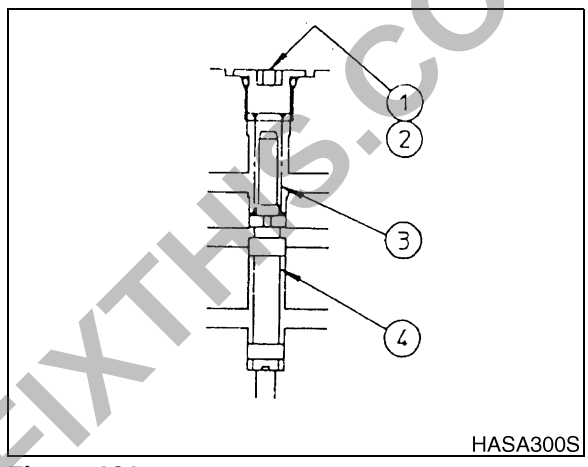

Figure 101

1. Loosen cap (1), remove stopper (2), spring (3) and check (4).

Cap hole size	8 mm
Tightening torque	4 kg m

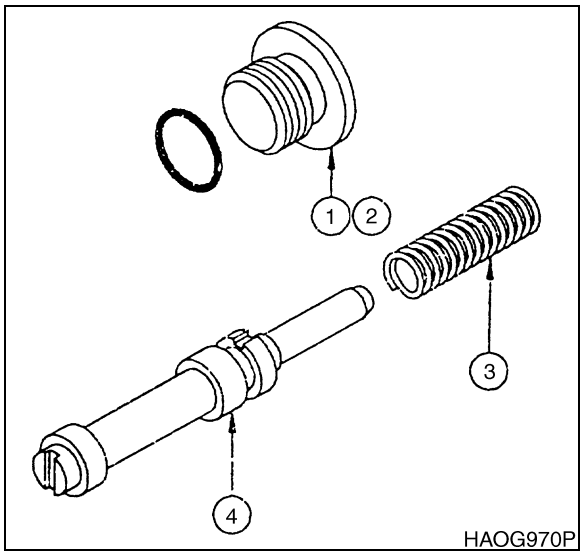

Figure 102

PREVIEW - YOUFIXTHIS.COM

Download full manual at youfixthis.com

8. Disassemble the push rod (214) from the plug (202).

IMPORTANT

Label and tag each push rod and plug so that they are returned to the same location during reassembly.

The push rod is a highly delicate part and care should be taken not to damage the surface of the part.

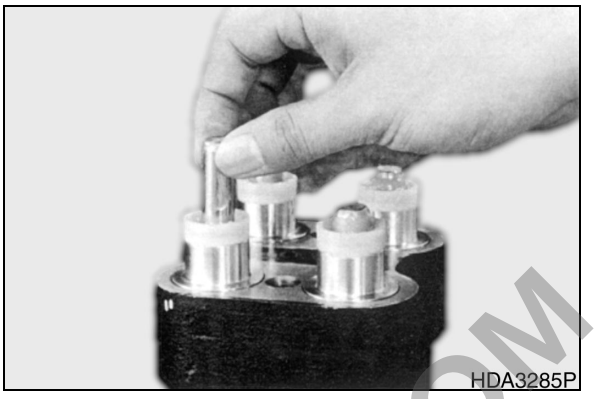

Figure 16

9. Remove grease cup (203), NHU packing (210) along with the plug.

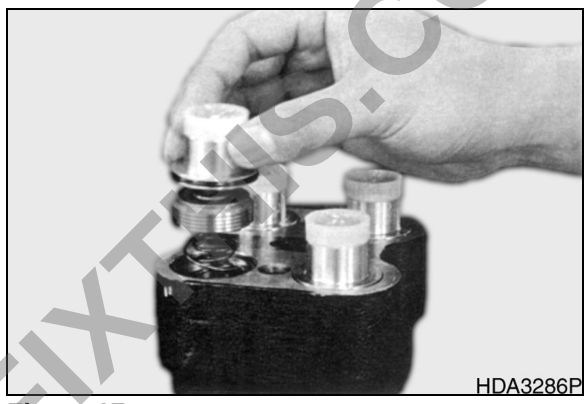

Figure 17

10. Remove the piston (224).

IMPORTANT

Label and tag each piston so that they are returned to the same location in the housing during reassembly.



Figure 18

11. Remove the two damping springs (336, 337) from the casing.

IMPORTANT

Label and tag each spring so that they are returned to the same location in the housing during reassembly.



Figure 19

PREVIEW - YOUFIXTHIS.COM

Download full manual at youfixthis.com

ENGINE STOP SYSTEM

The engine stop circuit consists of a starter switch (3), engine stop motor (4) and engine stop relay (5). There are two modes of operation - engine running and engine stop.

Operation In Engine Running Mode

When the starter switch (3) is turned to the "ON" position, the contact points ‘30’ and ‘87’ of the engine stop relay (5) are closed due to current flowing from the battery (1) → fusible link (2) → ‘B’ terminal of starter switch (3) → ‘ACC’ terminal of starter switch (3) → ‘86’ terminal of engine stop relay (5) → ‘85’ terminal of engine stop relay (5) → ground.

As a result, the engine stop motor (4) is rotated by the current flow from the battery (1) → fusible link (2) → ‘B’ terminal of the engine stop motor (4) → ‘P2’ terminal of engine stop motor (4) → ‘87’ terminal of engine stop relay (5) → ‘30’ terminal of the engine stop relay (5) → ‘A’ terminal of engine stop motor (4) → ‘E’ terminal of engine stop motor (4) → ground. The engine stop motor opens (pushes) the fuel shut off lever of the fuel injection pump and the system is in the running mode. The engine stop motor rotates 180° and comes to a stop due to the cam switch which shuts off the current to the motor.

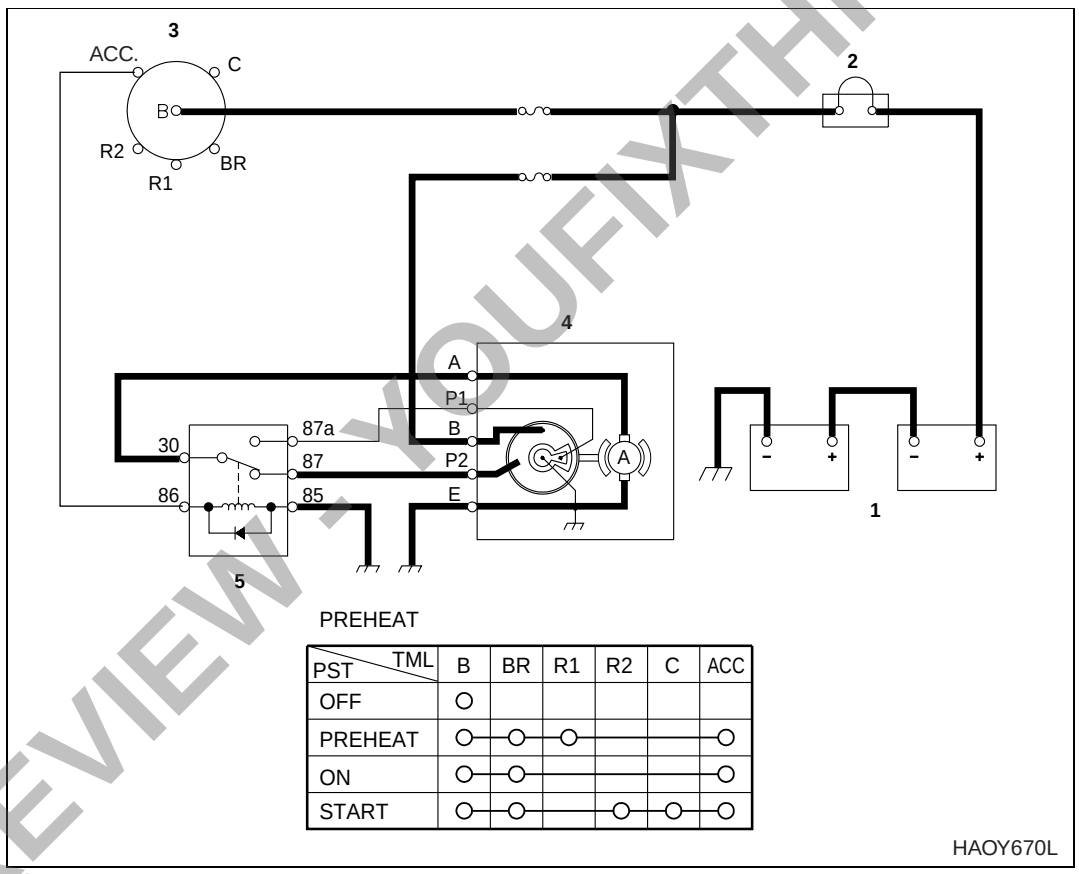

Figure 5 ENGINE STOP CIRCUIT - RUNNING MODE

Reference Number	Description
1	Battery
2	Fusible Link
3	Starter Switch

Reference Number	Description
4	Engine Stop Motor
5	Engine Stop Relay

PREVIEW - YOUFIXTHIS.COM

Download full manual at youfixthis.com

AUTOMATIC TRAVEL SPEED CONTROL

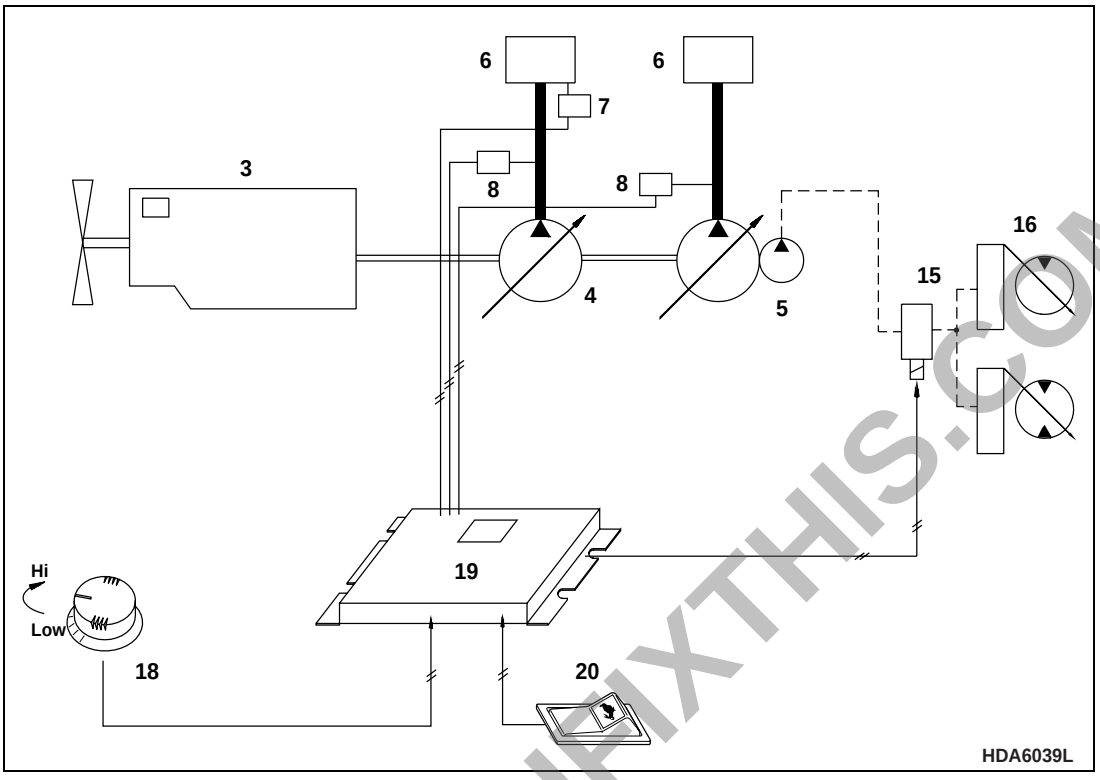

Figure 36

Reference Number	Description
3	Engine
4	Main Pump
6	Control Valve
7	Pressure Switch
8	Pump Pressure Sensor
15	Solenoid Valve (Travel II - Speed)

Reference Number	Description
16	Travel Motor
18	Engine Control Dial
19	EPOS-V Controller
20	Selection Switch For Automatic Travel

If the automatic travel speed control switch is set to the ‘OFF’ position, the travel motor will run in the I-speed (low speed) range. If the selection switch is set to the ‘ON’ position, the EPOS-V controller will monitor the main pump discharge pressure and automatically select the ‘ON - OFF’ state of the II - speed travel solenoid valve based on the travel load. The travel speed is changed between the I-speed and the II-speed mode.

The travel load is monitored by the two pressure sensors located in the discharge lines of the front and rear pumps. When the travel load is high (pressure over 270 kg/sq cm (3,840 psi)) the solenoid valve is turned ‘OFF’ and I-speed (low) is selected. In the case when the travel load is low (pressure under 130 kg/sq cm (1,849 psi)), the solenoid valve will is turned ‘ON’ and the II-speed will be selected. But, if the engine speed control switch dial is set below approximately 1400 rpm, the travel speed will be set to I-speed mode.

PREVIEW - YOUFIXTHIS.COM

Download full manual at youfixthis.com

PREVIEW ONLY

You're viewing 25 of 606 pages

The full manual includes:

- All 606 pages, complete
- Searchable PDF (find any keyword)
- No watermarks
- Instant download
- Print-ready quality

GET FULL MANUAL NOW

Daewoo Solar 170LC-V Shop Manual

Scan or click anywhere
youfixthis.com

Click anywhere on this page to get the full manual