GENERAL SPECIFICATIONS

Shipping Weight	20.9 metric tons (46,100 lb), includes 10% fuel, boom, 2,900 mm (9’ 6") arm, standard bucket and standard shoes
Operating Weight	Add weight of full fuel tank and operator.
Shipping Weights With Optional Track Shoes	Add 300 kg (661 lb) for 700 mm (28") shoes
	Add 600 kg (1,323 lb) for 800 mm (32") shoes
	Add 900 kg (1,984 lb) for 900 mm (35") shoes
Major Component Weights	Standard Boom 1,374.0 kg (3,029.15 lbs)
	2,400.0 mm (94.49 in.) Arm 801.0 kg (1,765.90 lbs)
	2,900.0 mm (114.17 in.) Arm 817.0 kg (1,801.18 lbs)
	3,500.0 mm (137.80 in.) Arm 956.0 kg (2,107.62 lbs)
	6,200.0 mm (244.09 in.) Arm 1,554.0 kg (3,425.98 lbs)
	Boom Cylinders 171.0 kg (376.99 lbs) each
	Arm Cylinder 257.0 kg (566.59 lbs)
	Bucket Cylinder 144.0 kg (317.47 lbs)
	Counterweight 4,000.0 kg (8,818.49 lbs)
	Upper Turntable 8,750.0 kg (19,290.45 lbs)
	Lower - below Swing Bearing 7,850.0 kg (17,306.29 lbs)
Digging Forces:	
Bucket Cylinder	119 KN or 12,100 kg (26,700 lb) - with 2,900 mm (9’ 6") arm
	117 KN or 12,000 kg (26,500 lb) - with 2,400 mm (7’ 9") arm
Arm Cylinder	100 KN or 10,200 kg (22,500 lb) - with 2,900 mm (9’ 6") arm
	121 KN or 12,300 kg (27,100 lb) - with 2,400 mm (7’ 9") arm
Fuel Tank Capacity	310 liters (81.9 gal)
Hydraulic System Capacity	220 liters (58.1 gal)
Hydraulic Reservoir Capacity	160 liters (42.3 gal)
Bucket Heaped Capacity Range	PCSA 0.50 - 1.18 cu. m (0.65 - 1.54 cu. yd.)
	IMPORTANT: Refer to the Load Weight, Bucket and Arm Length Compatibility Table for information on which bucket sizes may be used safely with which arm length, for load material weights.
Shoe Type	Triple Grouser
Shoe Width and Optional Sizes	600 mm (24") - standard
	700 mm (28") - optional
	800 mm (32") - optional
	900 mm (35") - optional
Ground Pressure Ratings:	
Standard 600 mm (24") shoe -	0.44 kg/sq cm (6.3 psi)
Optional 700 mm (28.0") shoe -	0.38 kg/sq cm (5.4 psi)
Optional 800 mm (32.0") shoe -	0.34 kg/sq cm (4.8 psi)
Optional 900 mm (35.0") shoe -	0.31 kg/sq cm (4.4 psi)

PREVIEW - YOUFIXTHIS.COM

Download full manual at youfixthis.com

GENERAL MAINTENANCE PROCEDURES

⚠ CAUTION!

Follow all safety recommendations and safe shop practices outlined in the front of this manual or those contained within this section.

Always use tools and equipment that is in good working order.

Use lifting and hoisting equipment capable of safely handling load.

Remember, that ultimately safety is your own personal responsibility.

MODEL	SERIAL NUMBER RANGE
ALL MODELS	ALL RANGES

PREVIEW - YOUFIXTHIS.COM

Copyright 1998 Daewoo

September 1998

Download full manual at youfixthis.com

GENERAL DESCRIPTION

Schematic(s) presented in this section are laid out on facing pages.

An overlapping edge has been taken into consideration so that a photocopy can be made and pasted together to make a complete schematic.

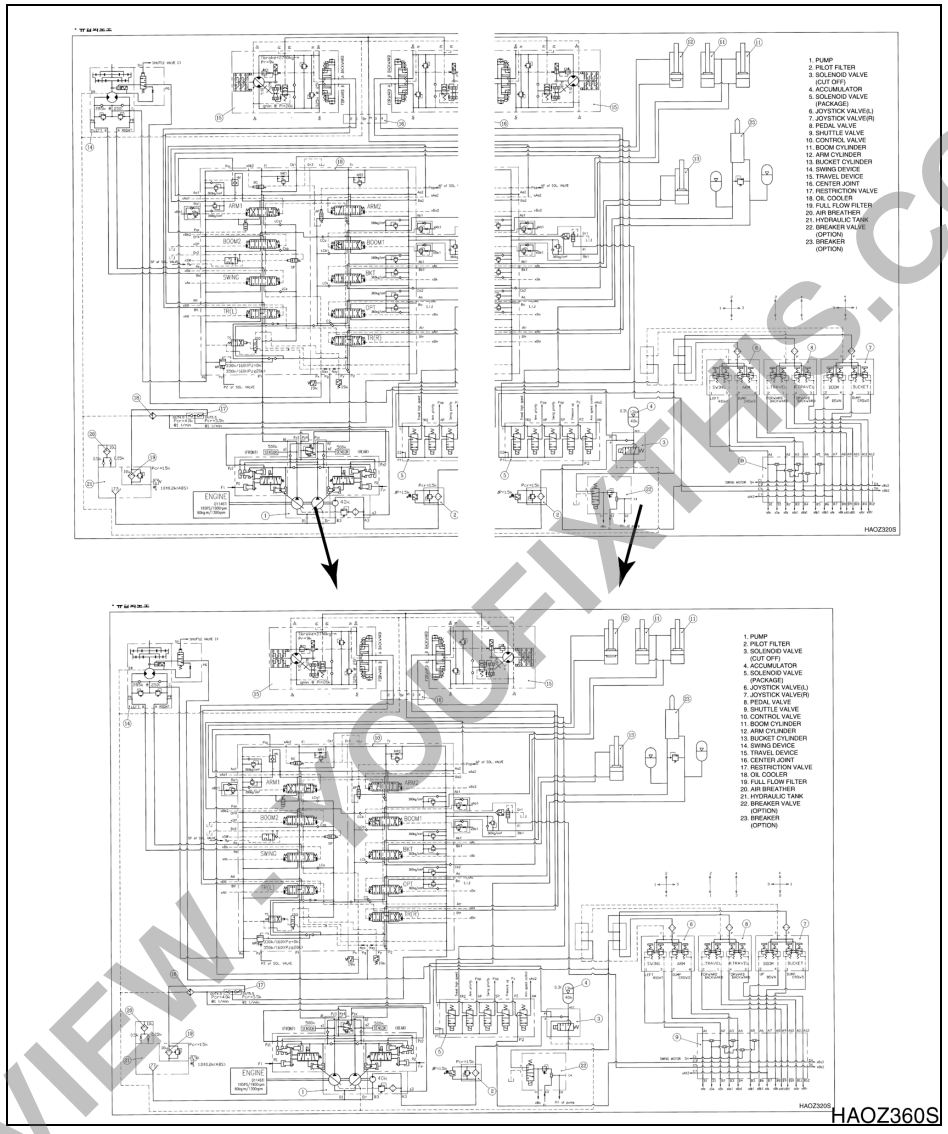

Figure 1

PREVIEW - YOUFIXTHIS.COM

Download full manual at youfixthis.com

GENERAL DESCRIPTION

Schematic(s) presented in this section are laid out on facing pages.

An overlapping edge has been taken into consideration so that a photocopy can be made and pasted together to make a complete schematic.

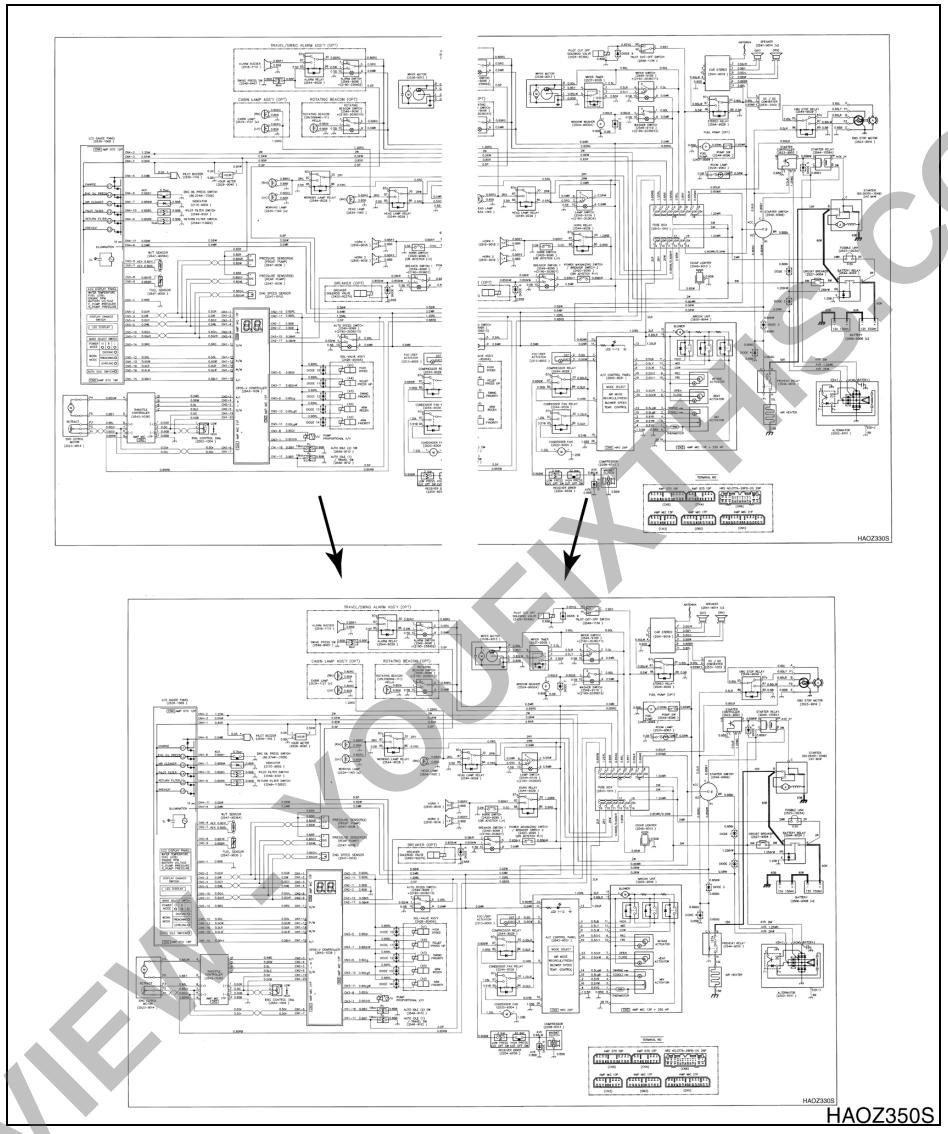

Figure 1

PREVIEW - YOUFIXTHIS.COM

Download full manual at youfixthis.com

REMOVAL

⚠ CAUTION!

Avoid disassembling cab if there are strong wind gusts, which could catch large surface area of cab shell and push it sideways during lift.

1. Park on firm and level ground.
2. Lower bucket to ground.
3. Shut engine down and remove key from starter switch.

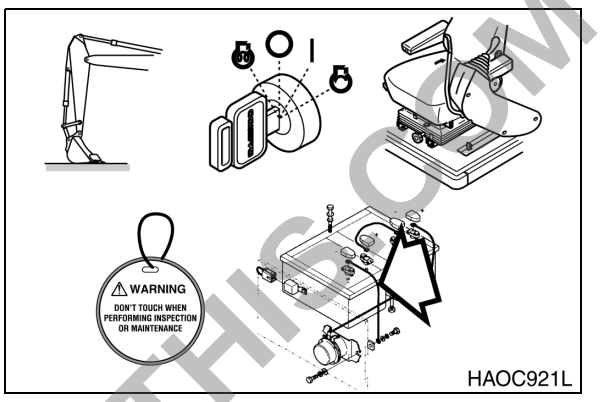

Figure 1

⚠ WARNING!

If engine must be run while performing maintenance, use extreme care. Always have one person in the cab at all times. Never leave the cab with the engine running.

4. Set safety lever on "LOCK" position.
5. Hang maintenance warning tag on controls.
6. Disconnect negative (-) battery cable leading to frame from battery.
7. Prepare cab shell for removal by disconnecting wiring connectors for:
   - A. Cab interior lighting.
   - B. External light wiring.
   - C. Radio antenna and connections.
   - D. Wiper/washer connections.

NOTE: *Control console wiring harnesses and hydraulic piping lines that pass through the floor of the cab do not need to be disassembled.*

NOTE: *If unit is equipped with a cab protective structure (for forestry, or hazardous working conditions), it must be removed.*

PREVIEW - YOUFIXTHIS.COM

Download full manual at youfixthis.com

TORQUE VALUES FOR STANDARD METRIC FASTENERS

NOTE: *The units for the torque values are kg•m (ft lbs)*

Dia. x Pitch (mm)	Grade										
	3.6 (4A)	4.6 (4D)	4.8 (4S)	5.6 (5D)	5.8 (5S)	6.6 (6D)	6.8 (6S)	6.9 (6G)	8.8 (8G)	10.9 (10K)	12.9 (12K)
M5 x Std.	0.15 (1.08)	0.16 (1.15)	0.25 (1.80)	0.22 (1.59)	0.31 (2.24)	0.28 (2.02)	0.43 (3.11)	0.48 (3.47)	0.50 (3.61)	0.75 (5.42)	0.90 (6.50)
M6 x Std.	0.28 (2.02)	0.30 (2.16)	0.45 (3.25)	0.40 (2.89)	0.55 (3.97)	0.47 (3.39)	0.77 (5.56)	0.85 (6.14)	0.90 (6.50)	1.25 (9.04)	1.50 (10.84)
M7 x Std.	0.43 (3.11)	0.46 (3.32)	0.70 (5.06)	0.63 (4.55)	0.83 (6.00)	0.78 (5.64)	1.20 (8.67)	1.30 (9.40)	1.40 (10.12)	1.95 (14.10)	2.35 (16.99)
M8 x Std.	0.70 (5.06)	0.75 (5.42)	1.10 (7.95)	1.00 (7.23)	1.40 (10.12)	1.25 (9.04)	1.90 (13.74)	2.10 (15.18)	2.20 (15.91)	3.10 (22.42)	3.80 (27.48)
M8 x 1	0.73 (5.28)	0.80 (5.78)	1.20 (8.67)	1.00 (7.23)	1.50 (10.84)	1.35 (9.76)	2.10 (15.18)	2.30 (16.63)	2.40 (17.35)	3.35 (24.23)	4.10 (29.65)
M10 x Std.	1.35 (9.76)	1.40 (10.12)	2.20 (15.91)	1.90 (13.74)	2.70 (19.52)	2.35 (19.99)	3.70 (26.76)	4.20 (30.37)	4.40 (31.18)	6.20 (44.84)	7.20 (52.07)
M10 x 1	1.50 (10.84)	1.60 (11.57)	2.50 (18.08)	2.10 (15.18)	3.10 (22.42)	2.80 (20.25)	4.30 (31.10)	4.90 (35.44)	5.00 (36.16)	7.00 (50.63)	8.40 (60.75)
M12 x Std.	2.40 (17.35)	2.50 (18.08)	3.70 (26.76)	3.30 (23.86)	4.70 (33.99)	4.20 (30.37)	6.30 (45.56)	7.20 (52.07)	7.50 (54.24)	10.50 (75.94)	12.50 (90.41)
M12 x 1.5	2.55 (18.44)	2.70 (19.52)	4.00 (28.93)	3.50 (25.31)	5.00 (36.16)	4.50 (32.54)	6.80 (49.18)	7.70 (55.69)	8.00 (57.86)	11.20 (81.00)	13.40 (96.92)
M14 x Std.	3.70 (26.76)	3.90 (28.20)	6.00 (13.23)	5.20 (37.61)	7.50 (54.24)	7.00 (50.63)	10.00 (72.33)	11.50 (83.17)	12.00 (86.79)	17.00 (122.96)	20.00 (144.66)
M14 x 1.5	4.10 (29.65)	4.30 (31.10)	6.60 (47.73)	5.70 (41.22)	8.30 (60.03)	7.50 (54.24)	11.10 (80.28)	12.50 (90.41)	13.00 (94.02)	18.50 (11.26)	22.00 (158.12)
M16 x Std.	5.60 (40.50)	6.00 (43.39)	9.00 (65.09)	8.00 (57.86)	11.50 (83.17)	10.50 (75.94)	15.50 (112.11)	17.90 (129.47)	18.50 (133.81)	26.00 (188.05)	31.00 (224.22)
M16 x 1.5	6.20 (44.84)	6.50 (47.01)	9.70 (70.16)	8.60 (62.20)	12.50 (90.41)	11.30 (81.73)	17.00 (122.96)	19.50 (141.04)	20.00 (144.66)	28.00 (202.52)	35.50 (256.77)
M18 x Std.	7.80 (56.41)	8.30 (60.03)	12.50 (90.41)	11.00 (79.56)	16.00 (115.72)	14.50 (104.87)	21.00 (151.89)	27.50 (198.90)	28.50 (206.14)	41.00 (296.55)	43.00 (311.01)
M18 x 1.5	9.10 (65.82)	9.50 (68.71)	14.40 (104.15)	12.50 (90.41)	18.50 (133.81)	16.70 (120.79)	24.50 (177.20)	27.50 (198.90)	28.50 (206.14)	41.00 (296.55)	49.00 (354.41)
M20 x Std.	11.50 (83.17)	12.00 (86.79)	18.00 (130.19)	16.00 (115.72)	22.00 (159.12)	19.00 (137.42)	31.50 (227.83)	35.00 (253.15)	36.00 (260.38)	51.00 (368.88)	60.00 (433.98)
M20 x 1.5	12.80 (92.58)	13.50 (97.64)	20.50 (148.27)	18.00 (130.19)	25.00 (180.82)	22.50 (162.74)	35.00 (253.15)	39.50 (285.70)	41.00 (296.55)	58.00 (419.51)	68.00 (491.84)
M22 x Std.	15.50 (112.11)	16.00 (115.72)	24.50 (177.20)	21.00 (151.89)	30.00 (216.99)	26.00 (188.05)	42.00 (303.78)	46.00 (332.71)	49.00 (354.41)	67.00 (484.61)	75.00 (542.47)
M22 x 1.5	17.00 (122.96)	18.50 (133.81)	28.00 (202.52)	24.00 (173.59)	34.00 (245.92)	29.00 (209.75)	47.00 (339.95)	52.00 (44.76)	56.00 (405.04)	75.00 (542.47)	85.00 (614.80)
M24 x Std.	20.50 (148.27)	21.50 (155.50)	33.00 (238.68)	27.00 (195.29)	40.00 (289.32)	34.00 (245.92)	55.00 (397.81)	58.00 (419.51)	63.00 (455.67)	82.00 (593.10)	92.00 (655.43)
M24 x 1.5	23.00 (166.35)	35.00 (253.15)	37.00 (267.62)	31.00 (224.22)	45.00 (325.48)	38.00 (202.52)	61.00 (441.21)	67.00 (484.61)	74.00 (535.24)	93.00 (672.66)	103.00 (744.99)

PREVIEW - YOUFIXTHIS.COM

Download full manual at youfixthis.com

Symptoms	Possible Causes	Remedies
1. No rotation and –		
a. Pressure at swing motor inlet *increases*	Swing brake not releasing	Check brake engagement and disengagement, check release pressure
	Internal damage to gearbox drive train	Replace broken gears, drive train assemblies
	Overload	Reduce load weight
b. Pressure at swing motor inlet shows *no increase,* **and** the swing motor is making irregular noises	Swing motor drive shaft damage	Replace swing motor
	Internal damage to gearbox drive train	Repair/replace broken or faulty assemblies
c. Pressure at swing motor inlet shows *no increase,* but **without** irregular *noises* from the swing motor	Hydraulic pump or valve broken	Troubleshoot hydraulic system
2. Oil leakage		
a. From drive shaft	Oil seal damaged	Replace oil seal
b. From bolted connections or other assembled surfaces	Assembly compound (joint sealer) old and not sealing, bolt not tight or flange warped	Disassemble and check mating surfaces. Reapply Loctite, torque bolts to specifications
3. Excess heat		
Gearbox casing becomes excessively hot, with or without irregular noise(s) during operation	Low oil level	Replace oil, refill to specified level
	Bearings or gear worn but not completely inoperative	Repair or replace gearbox

HAOE960L

PREVIEW - YOUFIXTHIS.COM

Download full manual at youfixthis.com

TRACK EXCAVATOR SAFETY

⚠ CAUTION!

Follow all safety recommendations and safe shop practices outlined in the front of this manual or those contained within this section.

Always use tools and equipment that is in good working order.

Use lifting and hoisting equipment capable of safely handling load.

Remember, that ultimately safety is your own personal responsibility.

MODEL	SERIAL NUMBER RANGE
Solar 130LC-V	0001 and Up
Solar 220LC-V	0001 and Up
Solar 170LC-V	1001 and Up
Solar 220N-V	1001 and Up
Solar 250LC-V	1001 and Up
Solar 290LC-V	0001 and Up
Solar 330LC-V	1001 and Up
Solar 400LC-V	1001 and Up
Solar 450LC-V	1001 and Up

PREVIEW - YOUFIXTHIS.COM

Copyright 2000 Daewoo

August 2000

Download full manual at youfixthis.com

PREVIEW - YOUFIXTHIS.COM

Download full manual at youfixthis.com

GENERAL DIMENSIONS

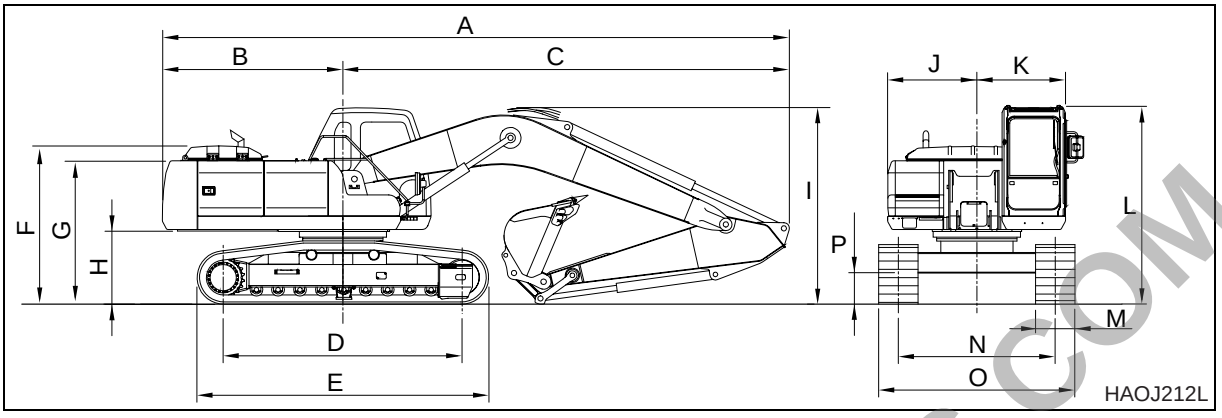

Figure 2

Reference	Dimension
Boom Type	One piece - 5,700 mm (18’ 8")
Arm Type	2,900 mm (9’ 6")
Bucket Size	0.8 cu. m (1.05 cu. yd.)
A	9,550 mm (375.98 in.)
B	2,750 mm (108.27 in.)
C	6,800 mm (267.72 in.)
D	3,645 mm (143.50 in.)
E	4,440 mm (74.80 in.)
F	2,410 mm (94.88 in.)
G	2,185 mm (86.02 in.)
H	1,115 mm (43.90 in.)
I	3,100 mm (122.05 in.)
J	1,360 mm (53.54 in.)
K	1,350 mm (53.15 in.)
L	3,030 mm (119.29 in.)
M	600 mm (23.62 in.)
N	2,390 mm (94.09 in.)
O	2,990 mm (117.72 in.)
P	480 mm (18.90 in.)

PREVIEW - YOUFIXTHIS.COM

Download full manual at youfixthis.com

The following General Torque Values must be used in all cases where **SPECIAL TORQUE VALUES** are not given

NOTE: *TORQUE VALUES LISTED THROUGHOUT THIS MANUAL ARE LUBRICATED (WET) THREADS; VALUES SHOULD BE INCREASED 1/3 FOR NON-LUBRICATED (DRY) THREADS.*

THREAD SIZE	HEAT TREATED MATERIAL GRADE 5 and GRADE 8			
	GRADE 5 (3 RADIAL DASHES ON HEAD)		GRADE 8 (6 RADIAL DASHES ON HEAD)	
	FOOT POUNDS (ft lbs)	NEWTON METER (N•m)	FOOT POUNDS (ft lbs)	NEWTON METER (N•m)
1/4" - 20	6	8	9	12
1/4" - 28	7	9	11	15
5/16" - 18	13	18	18	24
5/16" - 24	15	20	21	28
3/8" - 16	24	33	34	46
3/8" - 24	27	37	38	52
7/16" - 14	38	52	54	73
7/16" - 20	42	57	60	81
1/2" - 13	58	79	82	111
1/2" - 20	65	88	90	122
9/16" - 12	84	114	120	163
9/16" - 18	93	126	132	179
5/8" - 11	115	156	165	224
5/8" - 18	130	176	185	251
3/4" - 10	205	278	290	393
3/4" - 16	240	312	320	434
7/8" - 9	305	414	455	617
7/8" - 14	334	454	515	698
1" - 8	455	617	695	942
1" - 14	510	691	785	1064
1 1/8" - 7	610	827	990	1342
1 1/8" - 12	685	929	1110	1505
1 1/4" - 7	860	1166	1400	1898
1 1/4" - 12	955	1295	1550	2102
1 3/8" - 6	1130	1532	1830	2481
1 3/8" - 12	1290	1749	2085	2827
1 1/2" - 6	1400	2034	2430	3295
1 1/2" - 12	1690	2291	2730	3701
1 3/4" - 5	2370	3213	3810	5166
2" - 4 1/2	3550	4813	5760	7810

NOTE: *If any bolts and nuts are found loose or at values less than what the chart states, it is recommended that the loose bolt and/or nut be replaced with a new one.*

PREVIEW - YOUFIXTHIS.COM

Download full manual at youfixthis.com

15. Remove six bolts and washers (1, Figure 9), and handrail (2) from fuel tank (3) and cover (4).

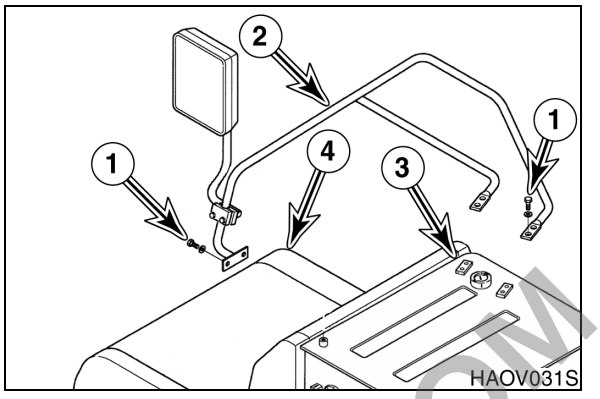

Figure 9

16. Remove four bolts and washers (1, Figure 10) and cover (2) from fuel tank (3) and support (4).

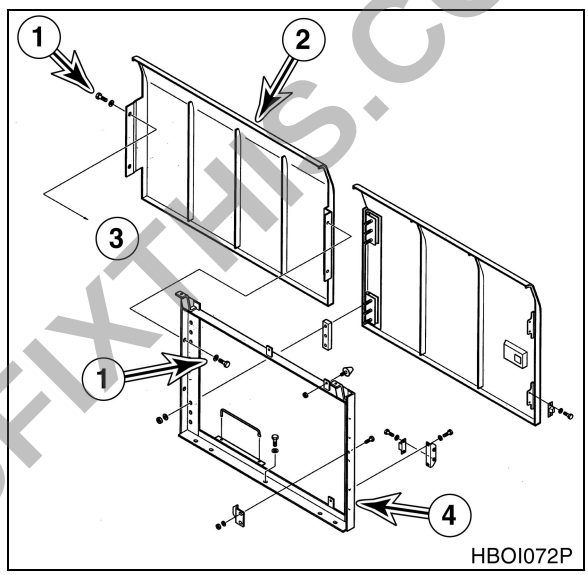

Figure 10

17. Install two 12 mm eye bolts in threaded holes at that bolts (1 and 2, Figure 11) come out of. Using a suitable lifting device, sling eye bolts.

18. Remove four bolts and washers (4, Figure 11) holding tank (3) to frame. Lift tank 25 mm (1") and make sure it is balanced. Make sure that there are no other electrical wires or hoses connected to tank. Completely remove tank after inspection.

    NOTE: *The clear level gauge on the side of the tank is easily damaged. Be careful of obstacles and wind gusts.*

19. Remove shims (5, Figure 11).

    NOTE: *If tank is to be reused note position and amount of shims used for each mounting bolt location.*

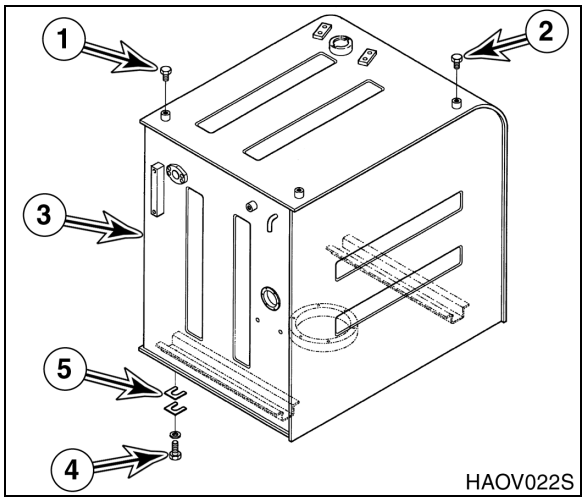

Figure 11

PREVIEW - YOUFIXTHIS.COM

Download full manual at youfixthis.com

18. Use a punch to make two strikes on the spring pin.

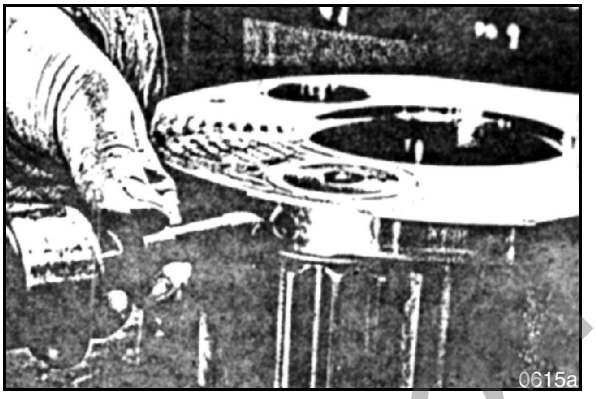

Figure 39

19. Install the thrust ring.

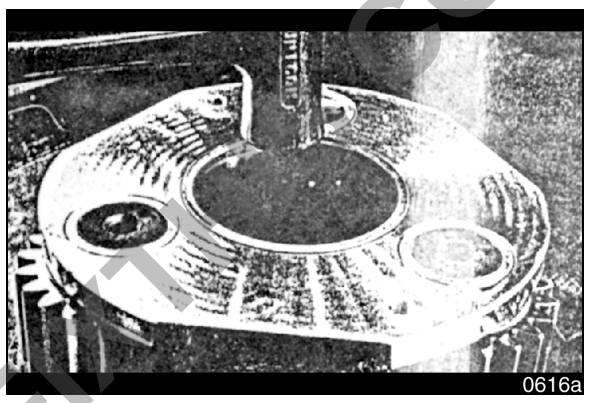

Figure 40

20. Reposition the assembly on top of the workbench. The drive shaft should be facing down.

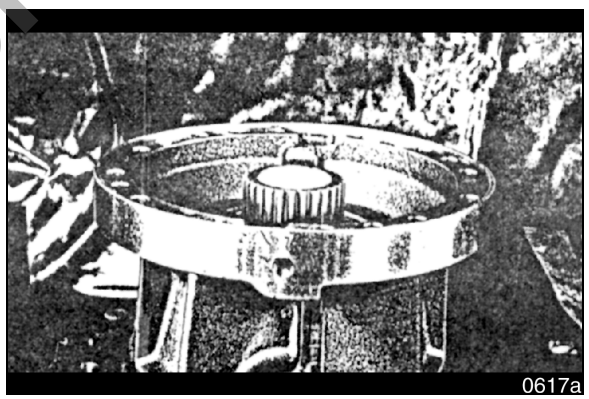

Figure 41

21. Push lock pins into the four holes in the gearbox housing. Apply an even, thin, continuous bead of Silicone flexible sealant to the contact surfaces of the housing and the ring gear. A non-corrosive, increased oil resistance silicone formula is recommended.

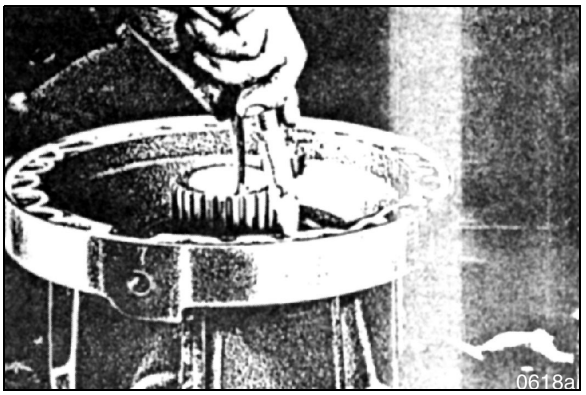

Figure 42

PREVIEW - YOUFIXTHIS.COM

Download full manual at youfixthis.com

PREVIEW - YOUFIXTHIS.COM

Download full manual at youfixthis.com

Table 1 Parts Information and Torque for Figure 9 and Figure 10			
Reference Number	**Description**	**Qty.**	**Torque (See Table 2 and 3)**
1	Spring Pin	4	Ta
2	Insert	4	
3	Bolt	4	
4	Flywheel	1	
5	Spring Pin	8	
6	Insert	4	
7	Hub	1	
8	Bolt	4	Ta
9	Pump shaft	1	
10	Clamping screw	2	Tb
11	Element	1	

PREVIEW - YOUFIXTHIS.COM

Download full manual at youfixthis.com

TABLE OF CONTENTS

General Description 3
Specifications 4
Accumulator Charging 5
Charging the Accumulator with Nitrogen 5

PREVIEW - YOUFIXTHIS.COM

Download full manual at youfixthis.com

SWING MOTOR

⚠ CAUTION!

Follow all safety recommendations and safe shop practices outlined in the front of this manual or those contained within this section.

Always use tools and equipment that is in good working order.

Use lifting and hoisting equipment capable of safely handling load.

Remember, that ultimately safety is your own personal responsibility.

MODEL	SERIAL NUMBER RANGE
Solar 220LC-V	0001 and 0151
Solar 220LL	1001 and Up

PREVIEW - YOUFIXTHIS.COM

Copyright 1999 Daewoo

March 1999

Download full manual at youfixthis.com

Reduction Gearbox Operation

This reduction gear is a combined system of planetary gear and differential gear, It reduces rotational speed, while increasing output torque of the hydraulic motor, and rotates the gear case.

1. Planetary gear

   If the sun gear (S) connected to the input shaft rotates, the planetary gear (P) turns around the teeth of the ring gear (R) while the shaft rotates. The planetary gear device transmits torque to the carrier (K) by transmitting this rotation.

$$i_1 = 1 + \frac{R \cdot P_2}{S \cdot P_1}$$

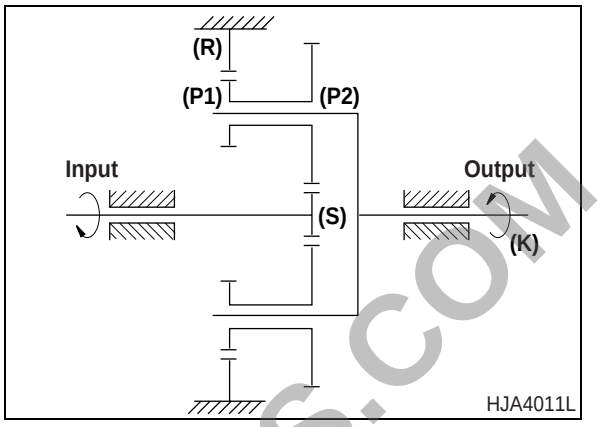

Figure 9

2. Differential gear

   If the carrier combined to the input shaft rotates, the planetary gears (Pl, P2) turn. If the gear ratios between (R) and (P1), (Pl) and (P2) are properly different, the co-axial gears (P1) and (P2) transmit torque by generating different rotation with the gear (D).

i

$$i_2 = \frac{1}{1 - \frac{R \cdot P_2}{D \cdot P_1}}$$

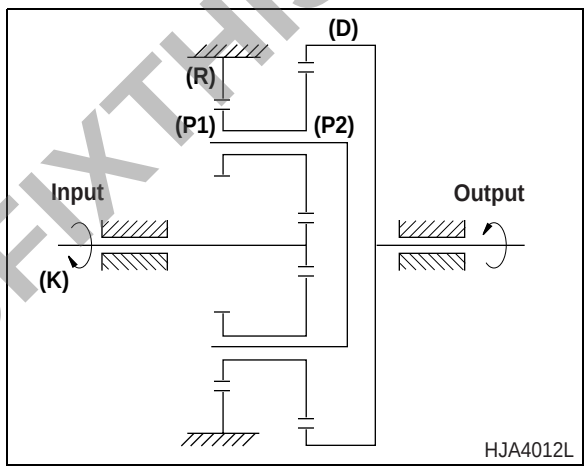

Figure 10

3. Combined device of planetary and differential device

   If the sun gear (S and R), and (P1), and the carrier rotates by the planetary motion of the gear (P 1).And the rotation of the carrier causes the differential motion between gears (R) and (P1), and between (P2) and (D), and causes the rotation of the ring gear, and so torque is transmitted.

$$i = i_1 \times i_2$$

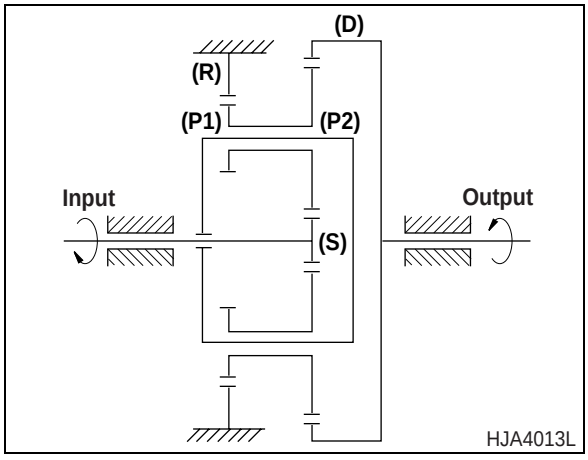

Figure 11

PREVIEW - YOUFIXTHIS.COM

Download full manual at youfixthis.com

4. Insert ball bearing (21) into hub (1).
5. Insert outer races of three roller bearings (22).

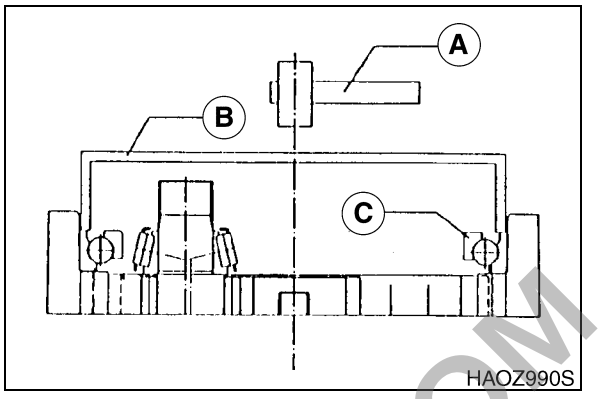

Figure 79

6. Install hold flange (3) at spindle (2).

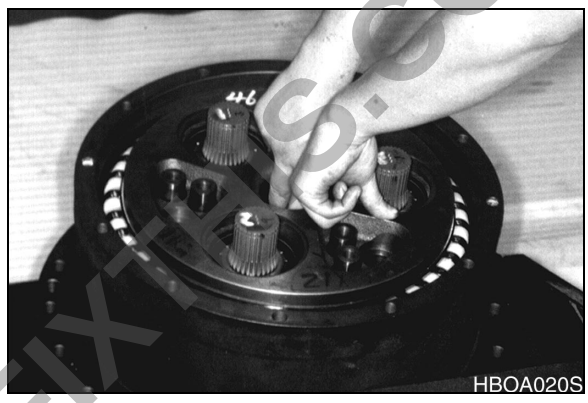

Figure 80

7. Coat locktite #638 at spindle (2) threads.
8. Place flat washers (37) in the three bolt holes of the flange (3).

   Tightening Torque 20 kg•m (145 ft lbs).
9. Hammer six parallel pins with an air chisel until it reaches pin hole bottom.



Figure 81

10. Tighten allen head bolt (19) to specified torque.

    Tightening Torque: 72.3 kg•m (523 ft lbs).

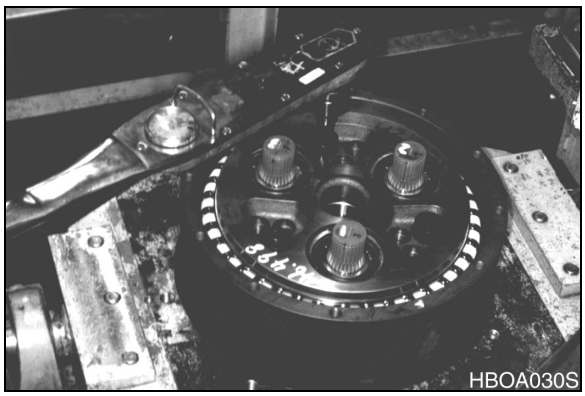

Figure 82

PREVIEW - YOUFIXTHIS.COM

Download full manual at youfixthis.com

9. Remove pilot piston (643) from bore.

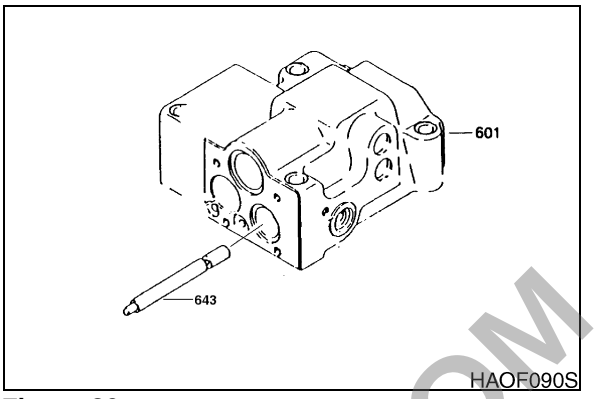

Figure 30

10. Disassemble feedback lever (611) assembly by separating side levers (612, 613). A 2 mm punch can be used to drive out pins (875) from levers.

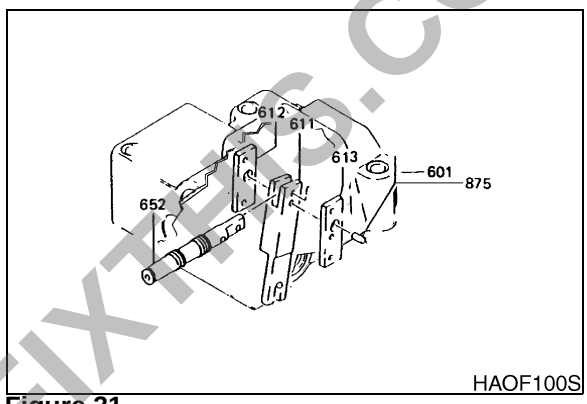

Figure 31

11. Remove piston case (622), compensator piston (621) and piston rod (623) from piston bore. Remove and inspect O-ring (733) from piston case (622).

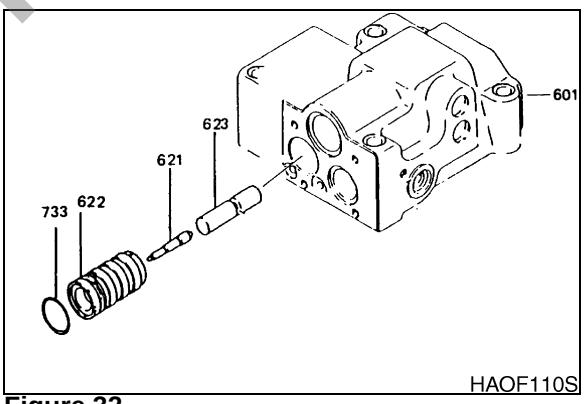

Figure 32

12. Remove spool (652) and sleeve (651) from bore by driving out pin (874). This will release feedback lever (611) from housing. Inspect snap ring (836) on sleeve.

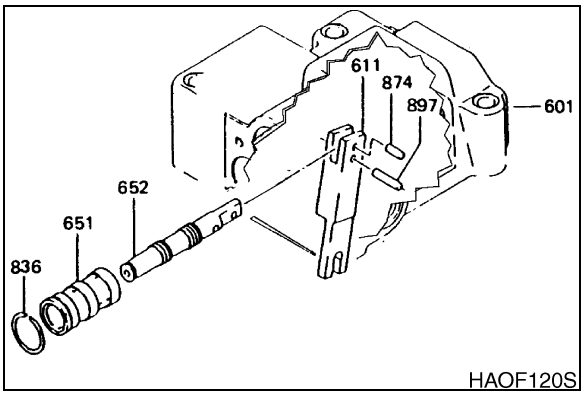

Figure 33

PREVIEW - YOUFIXTHIS.COM

Download full manual at youfixthis.com

Boom Load Holding Valve

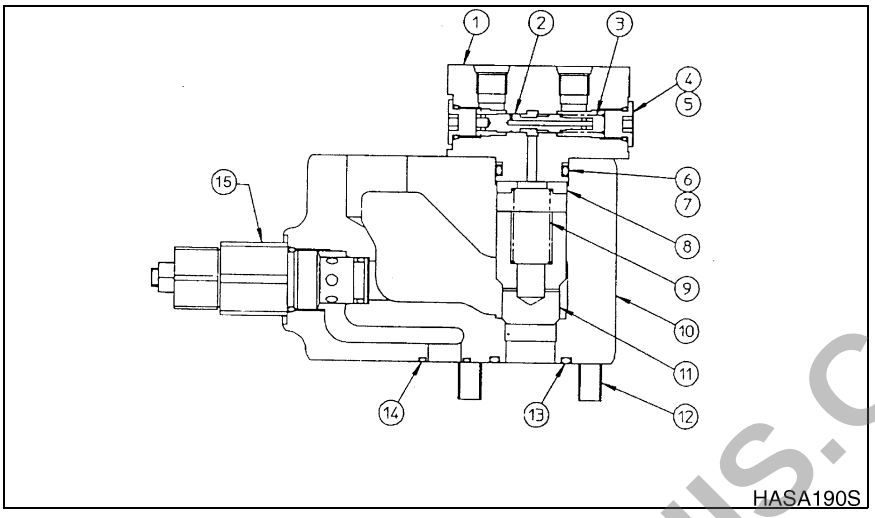

Figure 32

Reference Number	Description
1	Cover
2	Spool
3	Spring
4	Cap
5	O-ring
6	Backup Spring
7	O-ring

Reference Number	Description
8	Spring Seat
9	Spring
10	Manifold
11	Poppet
12	Bolt With Hole
13	O-ring
14	O-ring

Boom Unity Check

Reference Number	Description
1	Cap
2	O-ring
3	Stopper
4	Spring
5	Check

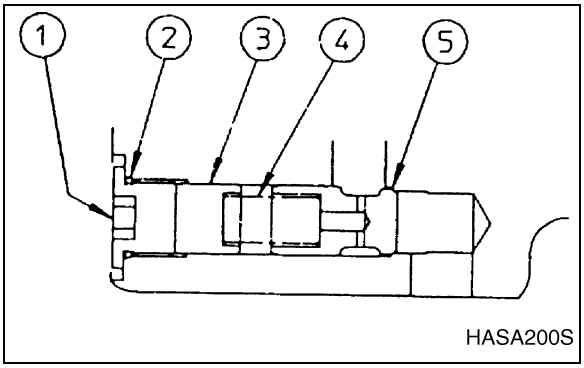

Figure 33

PREVIEW - YOUFIXTHIS.COM

Download full manual at youfixthis.com

IMPORTANT

When disassembling Swing Straight Travel Valve, tag and label each component so that all parts can be reassembled in the proper order.

IMPORTANT

When assembling components, inspect O-rings for any damage and replace as necessary.

Reference Number	Description
1	Cap
2	Stopper
3	Spring
4	Check

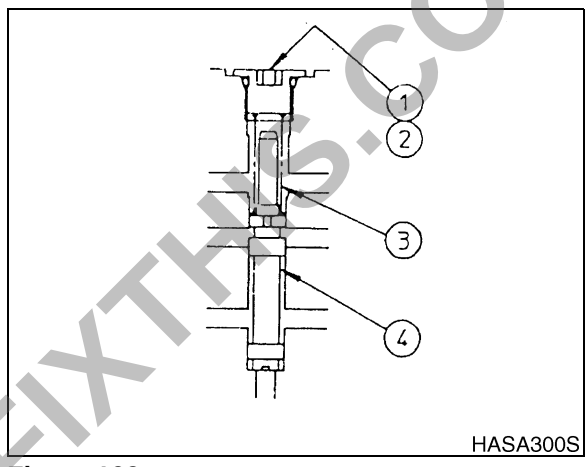

Figure 109

1. Loosen cap (1), remove stopper (2), spring (3) and check (4).

Cap hole size	8.0 mm
Tightening torque	10 kg•m (72 ft lbs)

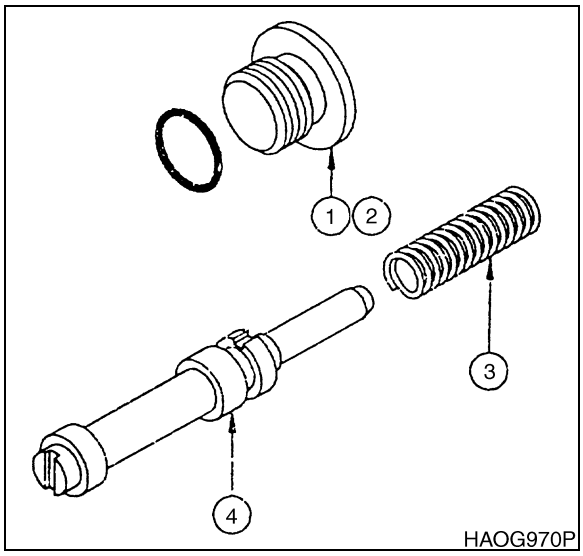

Figure 110

PREVIEW - YOUFIXTHIS.COM

Download full manual at youfixthis.com

TROUBLESHOOTING, TESTING AND ADJUSTMENT

At times it may be difficult to pinpoint the source of the problem. The following table lists some of the possible problems, possible causes and remedies. Refer to this table for possible causes and remedies to assist in correcting the sometimes difficult problems.

The table only lists some general problems, possible causes and their remedies. In many cases the problem is not caused by the failure of a single part but, may be the result of a combination of problems from related parts and their components. Possible problems other than the ones list are not being specified but that is not to say that these are the only possible problems that can occur. The technician must diagnose the problem, considering all possible causes and repair the source of the malfunction.

Problem	Cause	Remedy
Secondary Pressure Will Not Increase	Low primary pressure	Adjust primary pressure
	Defective secondary pressure select spring	Replace with new spring
	Gap between spool and casing is abnormally large	Replace spool casing assembly
	Defective operating parts and components	Disassemble/reassemble and replace defective parts
Unstable Secondary Pressure	Jamming of interconnected parts	Repair/replace cause of jamming
	Unstable tank line pressure	Install direct line to hydraulic tank
	Air in hydraulic lines	Vent air from system
Abnormally High Secondary Pressure	High tank line pressure	Install direct line to hydraulic tank
	Jamming of interconnected parts	Repair/replace cause of jamming
No Damping	Air in piston chamber	Vent air from system
	Jamming of interconnected parts	Repair/replace cause of jamming
	Worn damping springs (336, 337)	Replace with new parts
	Worn damping piston (224) and housing	Replace damping piston and housing assembly
	Defective/damaged check valve	Disassemble and examine check valve
	Worn damping piston orifice	Replace damping piston
Damping Piston Feels Heavy	Defective interconnected components	Repair/replace defective parts
	Restricted movement of damping piston	Repair/replace damaged piston

PREVIEW - YOUFIXTHIS.COM

Download full manual at youfixthis.com

ENGINE PREHEATING SYSTEM

Cylinder preheat plugs are installed into each cylinder of the engine.

When the starter switch (6) is turned to the ‘Preheat’ position, the current flows from the battery (1) → fusible link (3) → ‘B’ terminal of starter switch (6) → ‘R1’ terminal of starter switch → ‘C’ terminal of preheat relay (6) → ground and the contact points of the preheat relay are closed.

When the contact points of the preheat relay are closed, the glow plugs, heated by current flowing from the battery (1) → battery relay (2) → circuit breaker (5) → preheat relay (12) → glow plugs (7) → ground.

The preheat time is approximately 3.5 seconds. A built-in timer in the instrument panel will activate an indicator light approximately 19 seconds after the preheat process has been selected.

Even after the starter switch (6) has been moved to the start position the current will continue to flow through the ‘R2’ terminal of the starter switch (6) to the coil of the preheat relay (12) without disruption of the preheat process.

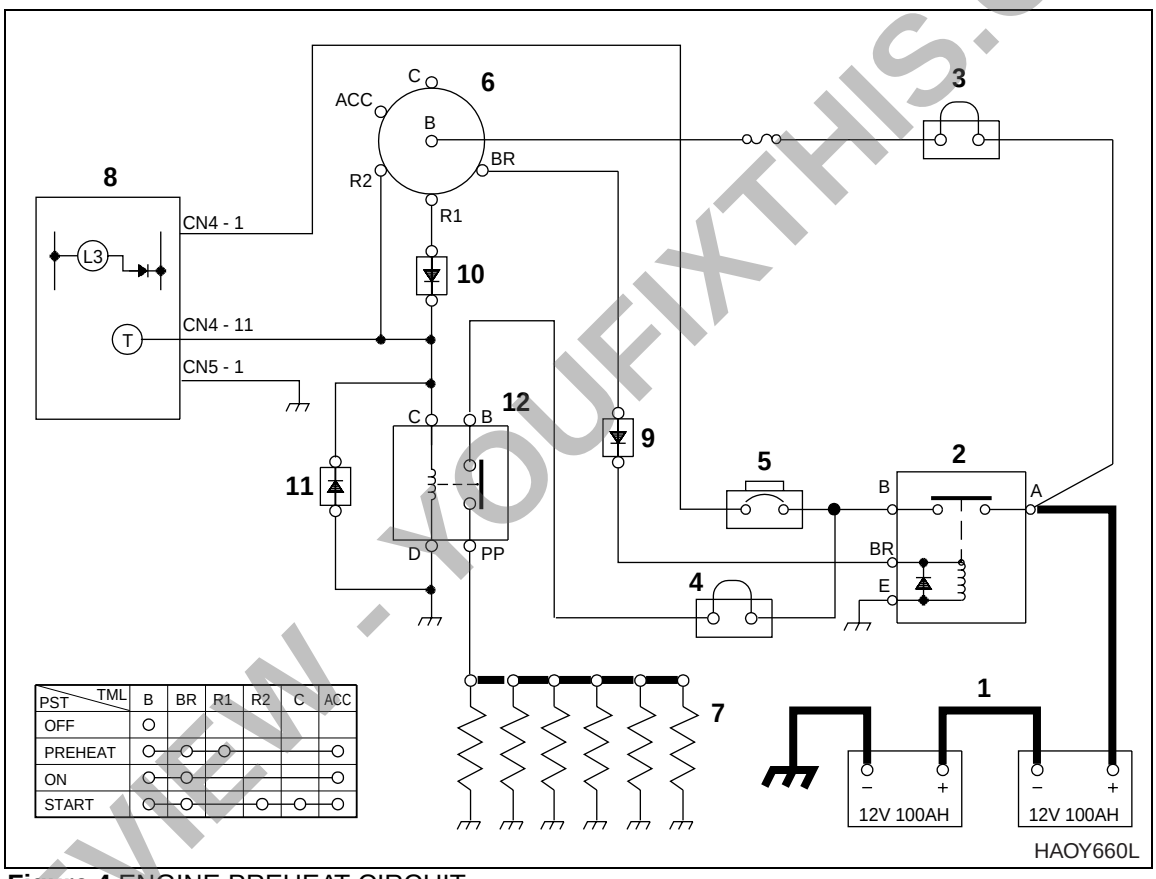

Figure 4 ENGINE PREHEAT CIRCUIT

Reference Number	Description
1	Battery
2	Battery Relay
3	Fusible Link (I)
4	Fusible Link (II)
5	Circuit Breaker

Reference Number	Description
6	Starter Switch
7	Preheat (Glow) Plugs
8	Instrument Panel
9, 10, 11	Diode
12	Preheater Relay

PREVIEW - YOUFIXTHIS.COM

Download full manual at youfixthis.com

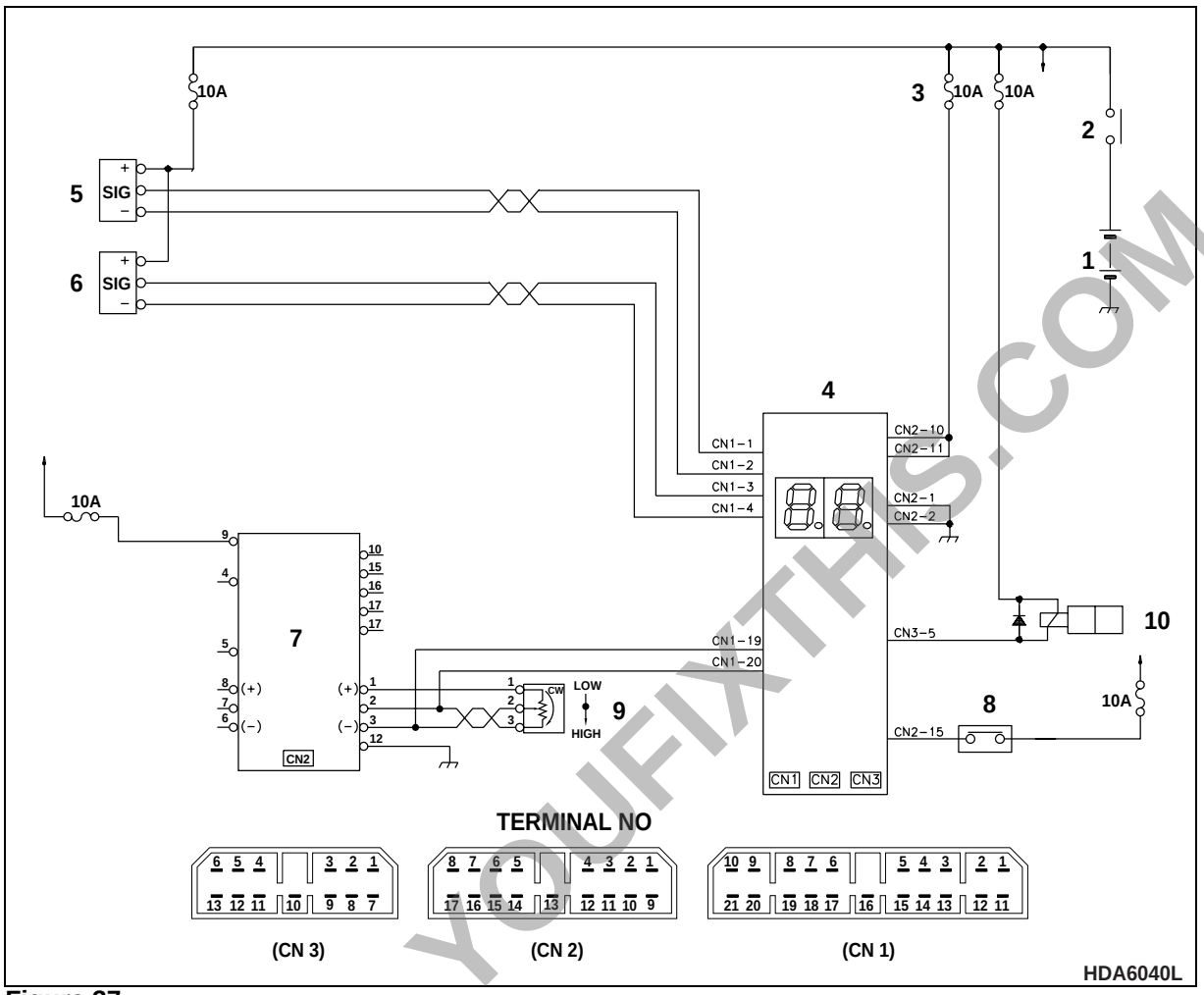

Figure 37

Reference Number	Description
1	Battery
2	Battery Relay
3	Fuse
4	EPOS-V Controller
5	Pressure Sensor (Front Pump)

Reference Number	Description
6	Pressure Sensor (Rear Pump)
7	Engine Throttle Controller
8	Automatic Travel Select Switch
9	Engine Control Dial

PREVIEW - YOUFIXTHIS.COM

Download full manual at youfixthis.com

PREVIEW ONLY

You're viewing 25 of 600 pages

The full manual includes:

- All 600 pages, complete
- Searchable PDF (find any keyword)
- No watermarks
- Instant download
- Print-ready quality

GET FULL MANUAL NOW

Daewoo Solar 220LC-V Shop Manual

Scan or click anywhere
youfixthis.com

Click anywhere on this page to get the full manual