SPECIFICATIONS FOR SOLAR 220LL

⚠ CAUTION!

Follow all safety recommendations and safe shop practices outlined in the front of this manual or those contained within this section.

Always use tools and equipment that is in good working order.

Use lifting and hoisting equipment capable of safely handling load.

Remember, that ultimately safety is your own personal responsibility.

MODEL	SERIAL NUMBER RANGE
Solar 220LL	1001 and UP

PREVIEW - YOUFIXTHIS.COM

Copyright 1999 Daewoo

March 1999

Download full manual at youfixthis.com

GENERAL MAINTENANCE PROCEDURES

⚠ CAUTION!
Follow all safety recommendations and safe shop practices outlined in the front of this manual or those contained within this section. **Always use tools and equipment that is in good working order.** **Use lifting and hoisting equipment capable of safely handling load.** **Remember, that ultimately safety is your own personal responsibility.**

MODEL	SERIAL NUMBER RANGE
ALL MODELS	ALL RANGES

PREVIEW - YOUFIXTHIS.COM

Copyright 1998 Daewoo

September 1998

Download full manual at youfixthis.com

TORQUE VALUES FOR STANDARD METRIC FASTENERS

NOTE: *The units for the torque values are kg m (ft lb)*

Grade Dia. x Pitch (mm)	3.6 (4A)	4.6 (4D)	4.8 (4S)	5.6 (5D)	5.8 (5S)	6.6 (6D)	6.8 (6S)	6.9 (6G)	8.8 (8G)	10.9 (10K)	12.9 (12K)
M5 x Std.	0.15 (1.08)	0.16 (1.15)	0.25 (1.80)	0.22 (1.59)	0.31 (2.24)	0.28 (2.02)	0.43 (3.11)	0.48 (3.47)	0.50 (3.61)	0.75 (5.42)	0.90 (6.50)
M6 x Std.	0.28 (2.02)	0.30 (2.16)	0.45 (3.25)	0.40 (2.89)	0.55 (3.97)	0.47 (3.39)	0.77 (5.56)	0.85 (6.14)	0.90 (6.50)	1.25 (9.04)	1.50 (10.84)
M7 x Std.	0.43 (3.11)	0.46 (3.32)	0.70 (5.06)	0.63 (4.55)	0.83 (6.00)	0.78 (5.64)	1.20 (8.67)	1.30 (9.40)	1.40 (10.12)	1.95 (14.10)	2.35 (16.99)
M8 x Std.	0.70 (5.06)	0.75 (5.42)	1.10 (7.95)	1.00 (7.23)	1.40 (10.12)	1.25 (9.04)	1.90 (13.74)	2.10 (15.18)	2.20 (15.91)	3.10 (22.42)	3.80 (27.48)
M8 x 1	0.73 (5.28)	0.80 (5.78)	1.20 (8.67)	1.00 (7.23)	1.50 (10.84)	1.35 (9.76)	2.10 (15.18)	2.30 (16.63)	2.40 (17.35)	3.35 (24.23)	4.10 (29.65)
M10 x Std.	1.35 (9.76)	1.40 (10.12)	2.20 (15.91)	1.90 (13.74)	2.70 (19.52)	2.35 (19.99)	3.70 (26.76)	4.20 (30.37)	4.40 (31.18)	6.20 (44.84)	7.20 (52.07)
M10 x 1	1.50 (10.84)	1.60 (11.57)	2.50 (18.08)	2.10 (15.18)	3.10 (22.42)	2.80 (20.25)	4.30 (31.10)	4.90 (35.44)	5.00 (36.16)	7.00 (50.63)	8.40 (60.75)
M12 x Std.	2.40 (17.35)	2.50 (18.08)	3.70 (26.76)	3.30 (23.86)	4.70 (33.99)	4.20 (30.37)	6.30 (45.56)	7.20 (52.07)	7.50 (54.24)	10.50 (75.94)	12.50 (90.41)
M12 x 1.5	2.55 (18.44)	2.70 (19.52)	4.00 (28.93)	3.50 (25.31)	5.00 (36.16)	4.50 (32.54)	6.80 (49.18)	7.70 (55.69)	8.00 (57.86)	11.20 (81.00)	13.40 (96.92)
M14 x Std.	3.70 (26.76)	3.90 (28.20)	6.00 (13.23)	5.20 (37.61)	7.50 (54.24)	7.00 (50.63)	10.00 (72.33)	11.50 (83.17)	12.00 (86.79)	17.00 (122.96)	20.00 (144.66)
M14 x 1.5	4.10 (29.65)	4.30 (31.10)	6.60 (47.73)	5.70 (41.22)	8.30 (60.03)	7.50 (54.24)	11.10 (80.28)	12.50 (90.41)	13.00 (94.02)	18.50 (11.26)	22.00 (158.12)
M16 x Std.	5.60 (40.50)	6.00 (43.39)	9.00 (65.09)	8.00 (57.86)	11.50 (83.17)	10.50 (75.94)	15.50 (112.11)	17.90 (129.47)	18.50 (133.81)	26.00 (188.05)	31.00 (224.22)
M16 x 1.5	6.20 (44.84)	6.50 (47.01)	9.70 (70.16)	8.60 (62.20)	12.50 (90.41)	11.30 (81.73)	17.00 (122.96)	19.50 (141.04)	20.00 (144.66)	28.00 (202.52)	35.50 (256.77)
M18 x Std.	7.80 (56.41)	8.30 (60.03)	12.50 (90.41)	11.00 (79.56)	16.00 (115.72)	14.50 (104.87)	21.00 (151.89)	27.50 (198.90)	28.50 (206.14)	41.00 (296.55)	43.00 (311.01)
M18 x 1.5	9.10 (65.82)	9.50 (68.71)	14.40 (104.15)	12.50 (90.41)	18.50 (133.81)	16.70 (120.79)	24.50 (177.20)	27.50 (198.90)	28.50 (206.14)	41.00 (296.55)	49.00 (354.41)
M20 x Std.	11.50 (83.17)	12.00 (86.79)	18.00 (130.19)	16.00 (115.72)	22.00 (159.12)	19.00 (137.42)	31.50 (227.83)	35.00 (253.15)	36.00 (260.38)	51.00 (368.88)	60.00 (433.98)
M20 x 1.5	12.80 (92.58)	13.50 (97.64)	20.50 (148.27)	18.00 (130.19)	25.00 (180.82)	22.50 (162.74)	35.00 (253.15)	39.50 (285.70)	41.00 (296.55)	58.00 (419.51)	68.00 (491.84)
M22 x Std.	15.50 (112.11)	16.00 (115.72)	24.50 (177.20)	21.00 (151.89)	30.00 (216.99)	26.00 (188.05)	42.00 (303.78)	46.00 (332.71)	49.00 (354.41)	67.00 (484.61)	75.00 (542.47)
M22 x 1.5	17.00 (122.96)	18.50 (133.81)	28.00 (202.52)	24.00 (173.59)	34.00 (245.92)	29.00 (209.75)	47.00 (339.95)	52.00 (44.76)	56.00 (405.04)	75.00 (542.47)	85.00 (614.80)
M24 x Std.	20.50 (148.27)	21.50 (155.50)	33.00 (238.68)	27.00 (195.29)	40.00 (289.32)	34.00 (245.92)	55.00 (397.81)	58.00 (419.51)	63.00 (455.67)	82.00 (593.10)	92.00 (655.43)
M24 x 1.5	23.00 (166.35)	35.00 (253.15)	37.00 (267.62)	31.00 (224.22)	45.00 (325.48)	38.00 (202.52)	61.00 (441.21)	67.00 (484.61)	74.00 (535.24)	93.00 (672.66)	103.00 (744.99)

PREVIEW - YOUFIXTHIS.COM

Download full manual at youfixthis.com

REMOVAL

⚠ CAUTION!

Avoid disassembling cab if there are strong wind gusts, which could catch large surface area of cab shell and push it sideways during lift.

1. Park on firm and level ground.
2. Lower bucket to ground.
3. Shut engine down and remove key from starter switch.

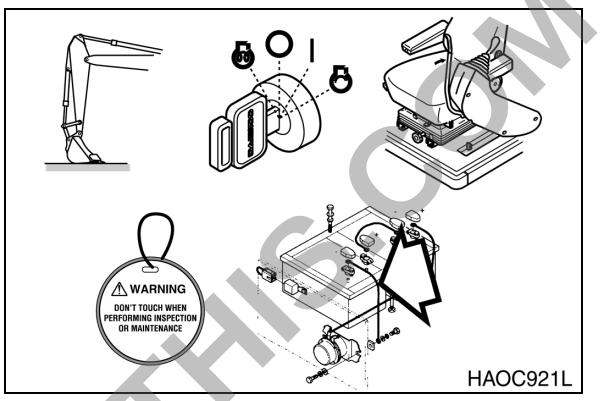

Figure 1

⚠ WARNING!

If engine must be run while performing maintenance, use extreme care. Always have one person in the cab at all times. Never leave the cab with the engine running.

4. Set safety lever on "LOCK" position.
5. Hang maintenance warning tag on controls.
6. Disconnect negative (-) battery cable leading to frame from battery.
7. Prepare cab shell for removal by disconnecting wiring connectors for:
   - A. Cab interior lighting.
   - B. External light wiring.
   - C. Radio antenna and connections.
   - D. Wiper/washer connections.

NOTE: *Control console wiring harnesses and hydraulic piping lines that pass through the floor of the cab do not need to be disassembled.*

NOTE: *If unit is equipped with a cab protective structure (for forestry, or hazardous working conditions), it must be removed.*

PREVIEW - YOUFIXTHIS.COM

Download full manual at youfixthis.com

GENERAL DESCRIPTION

Schematic(s) presented in this section are laid out on facing pages.

An overlapping edge has been taken into consideration so that a photocopy can be made and pasted together to make a complete schematic.

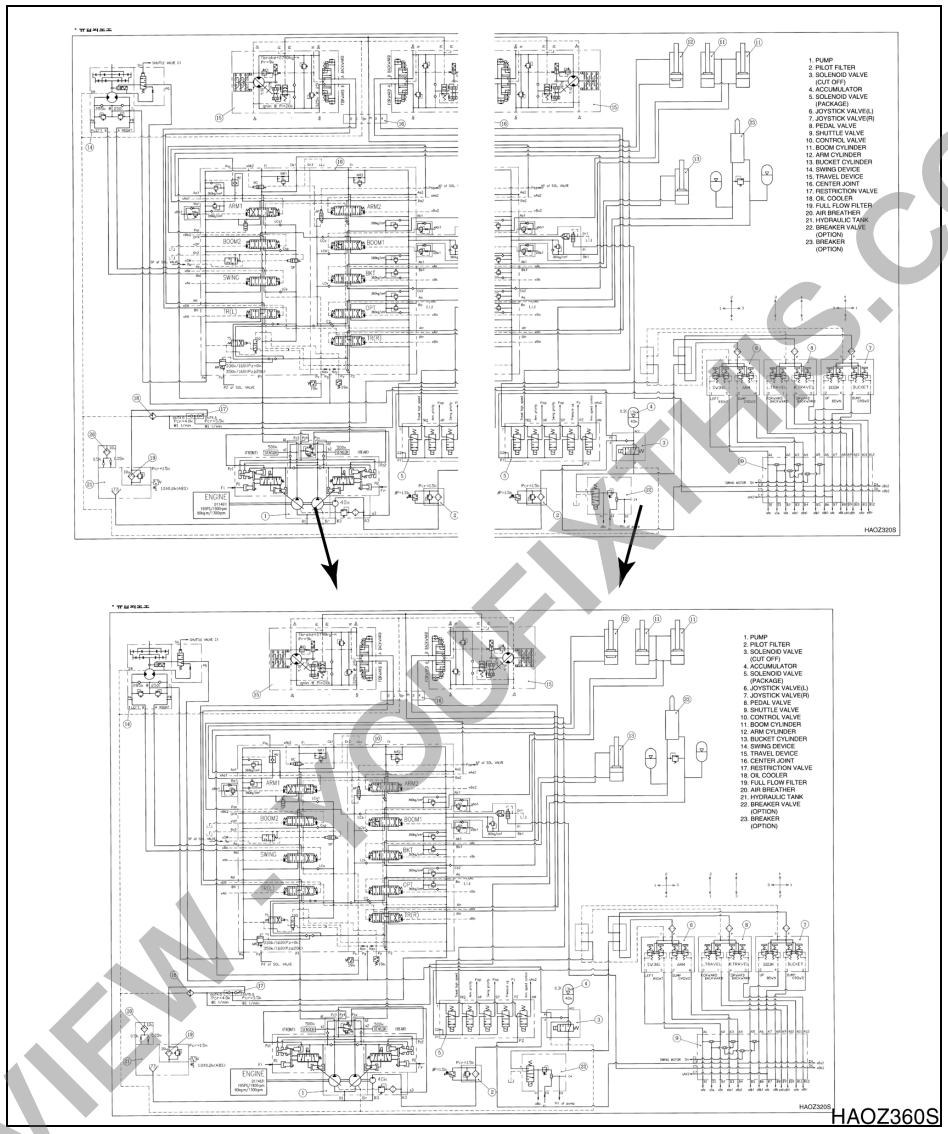

HAOZ360S

Figure 1

PREVIEW - YOUFIXTHIS.COM

Download full manual at youfixthis.com

10. Install the assembled drive shaft, with the bearings and other components in proper position, to the gearbox housing.

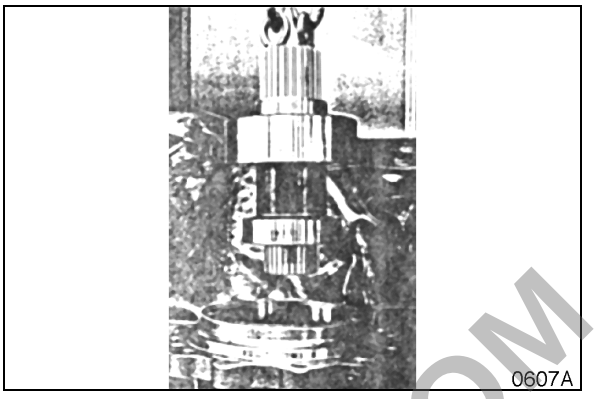

Figure 31

11. Attach the O-ring.

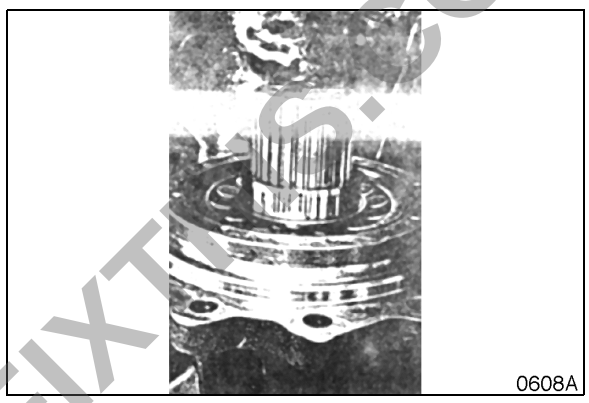

Figure 32

12. Install the oil seal in the front cover.

    NOTE: *The contact surface of the oil seal can be damaged if the oil seal is installed carelessly. Prelube the contact surface and make sure it is pressed in straight.*

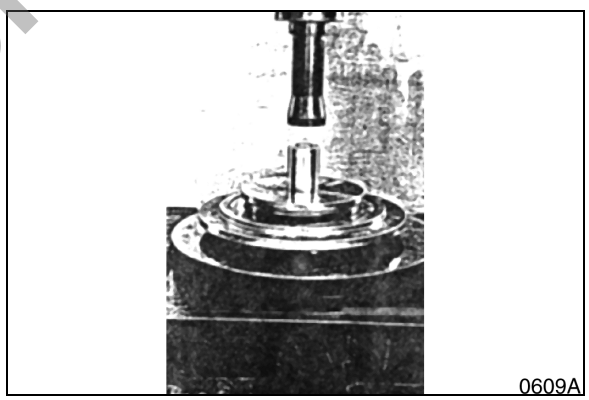

Figure 33

13. Install the front cover retaining bolts and tighten them in even rotation to the specified torque value.

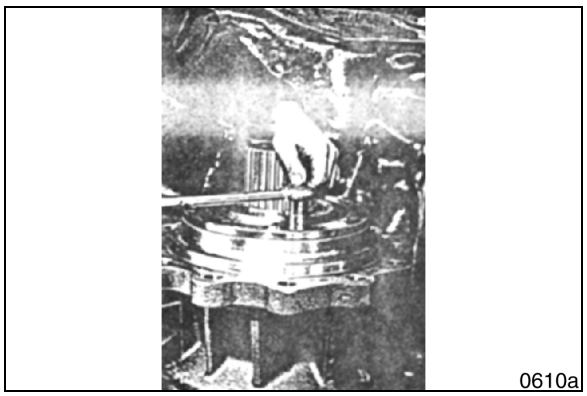

Figure 34

PREVIEW - YOUFIXTHIS.COM

Download full manual at youfixthis.com

TABLE OF CONTENTS

General Description..... 3
Solar 220LL..... 4

PREVIEW - YOUFIXTHIS.COM

Download full manual at youfixthis.com

TABLE OF CONTENTS

Safety

Track Excavator Safety S0102010

Specifications

Specifications for Solar 220LL S0205010

General Maintenance

General Maintenance Procedures S0302000

Standard Torques S0309000

Upper Structure

Cab S0402000

Counterweight S0403000

Fuel Tank S0405050

Swing Bearing S0407000

Swing Reduction Gearbox (RG10D20B-1) S0408010

Lower Structure and Chassis

Track Assembly S0505040

Engine and Drive Train

Air-Conditioner S0605010

Hydraulics

Hydraulic System Troubleshooting, Testing and Adjustment S0702070

Accumulator S0703000

Center Joint (Swivel) S0704010

Swing Motor S0707210

Travel Motor (With Gearbox) (GM35VL) S0707330

Grapple Rotate Motor S0707400

PREVIEW - YOUFIXTHIS.COM

Download full manual at youfixthis.com

TRACK EXCAVATOR SAFETY

⚠ CAUTION!

Follow all safety recommendations and safe shop practices outlined in the front of this manual or those contained within this section.

Always use tools and equipment that is in good working order.

Use lifting and hoisting equipment capable of safely handling load.

Remember, that ultimately safety is your own personal responsibility.

MODEL	SERIAL NUMBER RANGE
Solar 220LL	1001 and Up
Solar 290LL	1001 and Up

PREVIEW - YOUFIXTHIS.COM

Copyright 1999 Daewoo

February 1999

Download full manual at youfixthis.com

PREVIEW - YOUFIXTHIS.COM

Download full manual at youfixthis.com

DIMENSION	MEASUREMENT
A	3,505 mm (11’ - 6")
B	4,525 mm (14’ - 11")
C	13,678 mm (44’ - 11")
D	4,984 mm (16’ - 5")
E	3,226 mm (10’ - 7")
F	4,472 mm (14’ - 9")
G	3,500 mm (11’ - 6")
H	600 mm (2’ - 0")
J	3,645 mm (12’ - 0")
K	1,274 mm (4’ - 3")
L	690 mm (2’ - 3")
M	2,750 mm (9’ - 1")
N	1,055 mm (3’ - 6")
O	1,056 mm (3’ - 6")

PREVIEW - YOUFIXTHIS.COM

Download full manual at youfixthis.com

I. “Loctite” Fastener Adhesives

Product	Application	Color	Removal	Break-away Cure Strength (In/lb) Of Sealer Alone
222	Low strength for 6 mm (1/4") or smaller fasteners.	Purple	Hand tools	45
242 or 243	Medium strength for 6 mm (1/4") and larger fasteners.	Blue	Hand tools	80
262	High strength for high grade fasteners subject to shock, stress and vibration.	Red	Heat/260°C (500°F) Remove HOT (NO solvent)	160
271	Extra high strength for fine thread fasteners up to 25 mm (1") diameter.	Red	Heat/260°C (500°F) Remove HOT	160
272	High temperature/high strength for hostile environments to 232°C (450°F).	Red	Heat/316°C (600°F) Remove HOT	180
277	Extra high strength for coarse thread fasteners 25 mm (1") diameter and larger.	Red	Heat/260°C (500°F) Remove HOT	210

II. “Loctite” Pipe Thread Sealant

Product	Application	Color	Removal	Required Setup
545	“No-filler/non-clog” formula for high-pressure hydraulic systems. Over-application will not restrict or foul system components.	Purple	Hand tools	4 Hours (or 1/2 hour with Locquic “T” Primer)
656	Solvent-resistant, higher viscosity tapered thread sealer.	White	Hand tools	4 Hours (or 1/2 hour with Locquic “T” Primer)

III. “Loctite” gasket/flange sealer

Product	Application	Color	Notes
518	Gasket eliminator specifically made for aluminum flanges/surfaces. For hydraulic systems to 34,475 kPa (5,000 psi).	Red	Use Locquic “N” primer for fast (1/2 to 4 hours) setup. Unprimed setup 4-24 hours.
504	Low pressure/wide-gap gasket eliminator compound. Fills gaps to 0.0012 mm (0.030"), cures to rigid seal.	Orange	Use Locquic “N” primer for faster (1/2 to 4 hours) setup. Unprimed setup 4-24 hours.
515	General purpose, fast setup, flexible-cure gasket eliminator. For non-rigid assemblies subject to shock, vibration or deflection.	Purple	Use Locquic “N” primer for faster (1/4 to 2 hours) setup. Unprimed setup 1-12 hours.

PREVIEW - YOUFIXTHIS.COM

Download full manual at youfixthis.com

TABLE OF CONTENTS

Swing Bearing Maintenance 3
Operating Recommendation 3
Measuring Swing Bearing Axial Play 3
Measuring Bearing Lateral Play 3
Swing Bearing Basic Operation 4
Rebuilding Swing Bearing 4

PREVIEW - YOUFIXTHIS.COM

Download full manual at youfixthis.com

CLEANING AND INSPECTION (WEAR LIMITS AND TOLERANCES)

⚠ CAUTION!

Refer to the "Welding Precautions And Guidelines" information in "General Maintenance Procedures" section for general recommendations and specific safety precautions, prior to starting any lower travel frame component rebuilding procedure.

The tables that follow provide factory-specified dimensional limits (as-new condition, recommended service and replacement limit) for lower travel frame components.

Recommended maintenance to renew most listed components requires welding on additional material and grinding off excess. Some components must be replaced before the service limit is exceeded. No maintenance or renewal is possible.

Compare the values in the tables with dimensions and profiles shown in the adjacent figures.

Component / Reference Dimensions	Reference	Normal (New) Dimension	Recommended Limit for Maintenance	Limit for Use (Repair – P or Replace – R)
Standard 600 mm Shoe 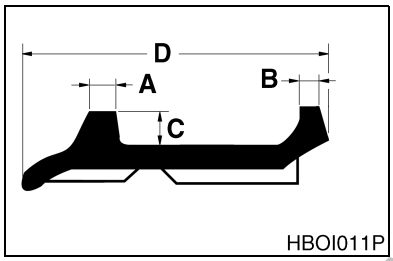 **Figure 4**	A	19.90 mm (0.78 in.)		
	B	20.90 mm (0.82 in.)		
	C	35.0 mm (1.38 in.)	30.0 mm (1.18 in.)	25.50 mm (1.0 in.)
	D	21.90 mm (0.86 in.)		
Track link, master link 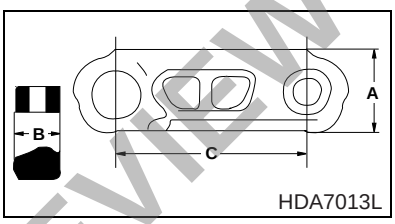 **Figure 5**	A	105.0 mm (4.13 in.)	100.0 mm (3.94 in.)	96.0 mm [P] (3.78 in.)
	B	40.50 mm (1.59 in.)	34.0 mm (1.34 in.)	29.0 mm [P] (1.14 in.)
	C*	190.0 mm (7.48 in.)	193.0 mm (7.60 in.)	194.50 mm [R] (7.66 in.)
	*Check and record the pitch of at least 5 links. Use average of all measurements to assess required service or action. Master links must be replaced, they cannot be renewed or rebuilt.			

PREVIEW - YOUFIXTHIS.COM

Download full manual at youfixthis.com

REFRIGERANT SYSTEM REPAIRS

⚠ WARNING!

Always wear protective glasses and gloves when handling refrigerant. If refrigerant comes in contact with the skin or eyes, immediately flush with clean, running water and consult a physician.

Select a clean and well ventilated area to work.

The refrigerant container is under high pressure and should be stored below 40°C (104°F). Be careful not to drop the container from a high location

The contents are under high pressure and should not be used with compressed air or near an open flame.

REFRIGERANT SAFE HANDLING PROCEDURES

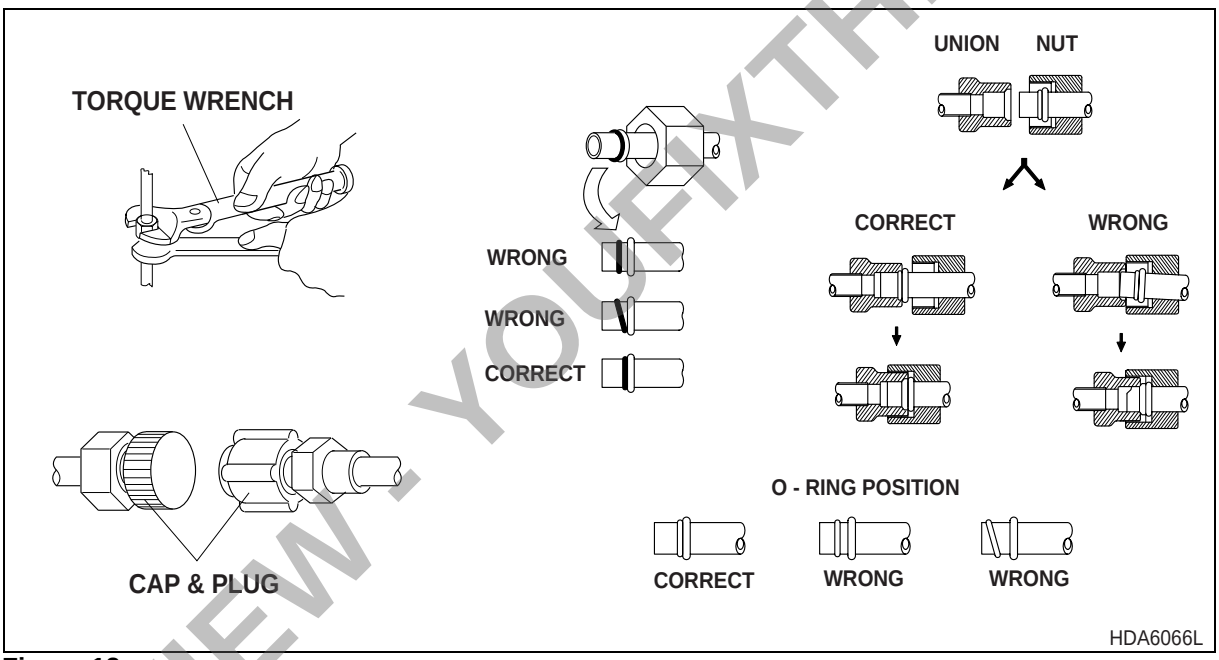

Figure 12

The following procedures should be observed for safe handling of refrigerant during vacuum and charging process.

1. Use an approved recovery / charging device which can safely perform vacuum and charge work simultaneously.
2. The new refrigerant has improved cooling characteristics than the old type and care should be used not to overcharge the system.
3. Do not over tighten connections when working on refrigerant system.
4. The new refrigerant system standards require new tools, equipment and parts. DO NOT attempt to use equipment use in servicing the old refrigerant system.

PREVIEW - YOUFIXTHIS.COM

Download full manual at youfixthis.com

Problem	Possible Causes	Remedies
Secondary pressure does not hold steady.	Dirt, other interference between valve parts, or worn spool sticking intermittently.	Clean, repair or replace.
	Interference or binding on spool return spring.	Clean, repair or replace.
	Interference, restriction or unsteady pressure in tank return line.	Repair or re-route tank return line.
	Air bubbles in piping (temporary) or air leak.	Vent air, or repair leak.
NOTE: *Look for evidence of leaking oil.*		

TROUBLESHOOTING – JOYSTICK CONTROL VALVE

Problem	Possible Causes	Remedies
Secondary pressure does not increase	Low primary pressure	Check primary pressure
	Broken spring	Replace spring
	Spool sticking	Clean, repair or replace
	Excess spool to casing clearance	Replace spool casing
	Worn or loose handle subassembly	Repair or replace handle subassembly
Secondary pressure too high	Dirt, other interference between valve parts	Clean, repair or replace
	Return line pressure too high	Redirect return line
Secondary pressure does not hold steady	Dirt, other interference between valve parts, or worn spool sticking intermittently	Clean, repair or replace
	Interference or binding on spool return spring	Clean, repair or replace
	Unsteady pressure in tank return line	Redirect return line
	Air bubbles in piping (temporary) or air leak	Vent air, or repair leak
NOTE: *Look for evidence of leaking oil to help locate damaged seals or gaskets that could be the cause of air leaks.*		

PREVIEW - YOUFIXTHIS.COM

Download full manual at youfixthis.com

REASSEMBLY

Reassembly of the motor is basically accomplished by reversing disassembly steps.

Use a torque wrench to make sure that assembly fasteners are tightened to specified values. Always begin a bolt tightening sequence from the innermost part of the assembly, working outward toward the ends in careful, even rotation.

1. Position motor casing face down (Figure 26).

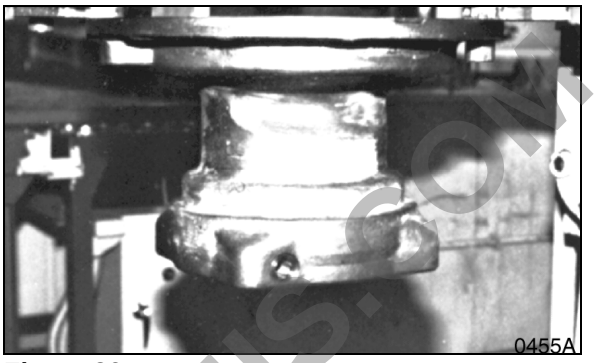

Figure 26

2. If drive shaft roller bearings were not disassembled, go on to next phase of assembly. Bearing reassembly begins with replacement of stop ring (432) (Figure 4 and its accompanying Parts List) and spacer (106) on drive shaft (101).

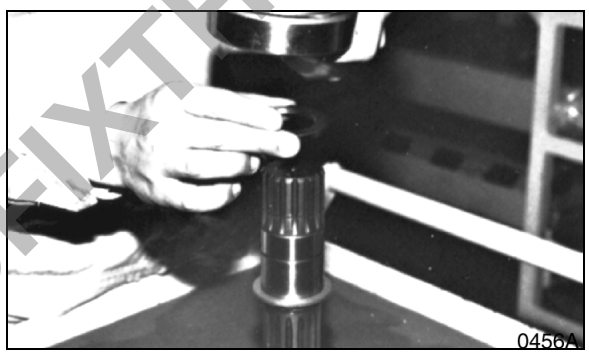

Figure 27

Make sure that bearing raceways (collars) are facing right direction. The drawing shows one side of the bearing collar (1, Figure 28), marked "R," which should be assembled next to spacer (2) on lower end of drive shaft.

A. Both bearing cages (inner roller assemblies) will probably require heating in oil prior to reassembly. Heat bearings to cause sufficient expansion of their inner diameters to allow reassembly on drive shaft.

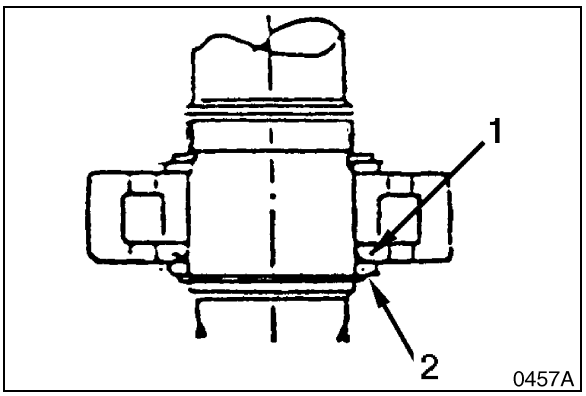

Figure 28

PREVIEW - YOUFIXTHIS.COM

Download full manual at youfixthis.com

Hold Flange Disassembly

1. Rotate motor in opposite direction
2. Fix by tightening two stationary metal fitting to hub (1) and spindle (2). At this time, tighten for stationary metal fittings to be positioned in symmetry.
3. Rotate motor in opposite direction
4. Remove snap ring (20), distance pieces (three respectively) from hold flange (3).
5. Cut caulked part at upper part of parallel pin hole.
6. Install pulling jig of parallel pin (34) and pull out parallel pin (34) up to the end face of hold flange (3) (6 places)

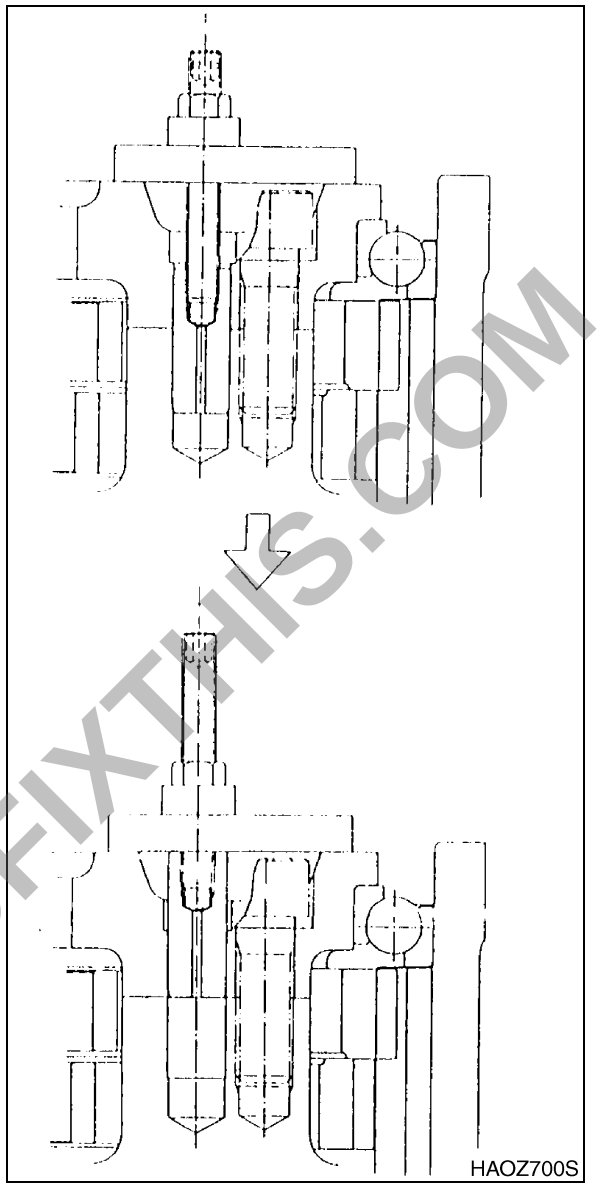

Figure 29

7. Loosen bolt with hexagon hole (19).

   Loosening torque: more than 70 kg•m (506 ft lbs).

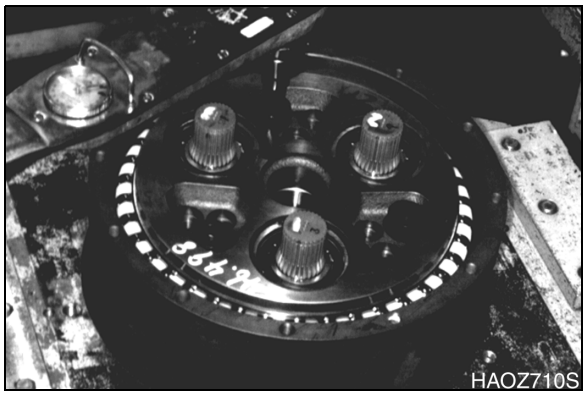

Figure 30

PREVIEW - YOUFIXTHIS.COM

Download full manual at youfixthis.com

TROUBLESHOOTING, TESTING AND ADJUSTMENT

PRELIMINARY CHECKS

Hydraulic systems are often trouble-free. Hence, the problem an operator complains of could be cause by something other than the hydraulic components.

Thus, once you have determined that a problem exists, start with the easy-to-check items, such as:

- Parts damaged from impact that were not properly repaired, or that should have been replaced
- Improper replacement parts used in previous servicing
- Mechanical linkage problems such as binding, broken, or loose parts or slipping belts

HYDRAULIC COMPONENTS

If you think the problem is caused by a hydraulic component, start by checking the easy-to-reach items.

Check all hoses and lines for cracks, hardening, or other signs of wear. Reroute any usable hoses that are kinked, severely bent, or that rest against hot engine parts. Look for leaks, especially at couplings and fittings. Replace any hoses or lines that don't meet system flow and pressure ratings.

Next, go to the reservoir and filter or filters. Check fluid level and look for air bubbles. Check the filter(s). A filter with a maximum 50 micron filtration is recommended for the Torqmotor system.

Visually check other components to see if they are loosely mounted, show signs of leaks, or other damage or wear.

Excessive heat in a hydraulic system can create problems that can easily be overlooked. Every system has its limitation for the maximum amount of temperature. After the temperature is attained and passed, the following can occur:

- Oil seal leaks
- Loss of efficiency such as speed and torque
- Pump loss of efficiency
- Pump failure
- Hoses become hard and brittle
- Hose failure

A normal temperature range means an efficient hydraulic system. Consult the manuals published by equipment and/or component manufacturers for maximum allowable temperature and hydraulic tests that may be necessary to run on the performance of the hydraulic components. The Torqmotor™ is not recommended for hydraulic systems with maximum temperatures above 200°F (93.3°C).

PREVIEW - YOUFIXTHIS.COM

Download full manual at youfixthis.com

PUMP REGULATOR OPERATION

The relationship between Pump Displacement Flow (Q on the vertical axis) and Pilot Pressure (Pi on the horizontal axis). Pump output discharge is controlled by increasing or decreasing pilot pump pressure (FIGURE 67).

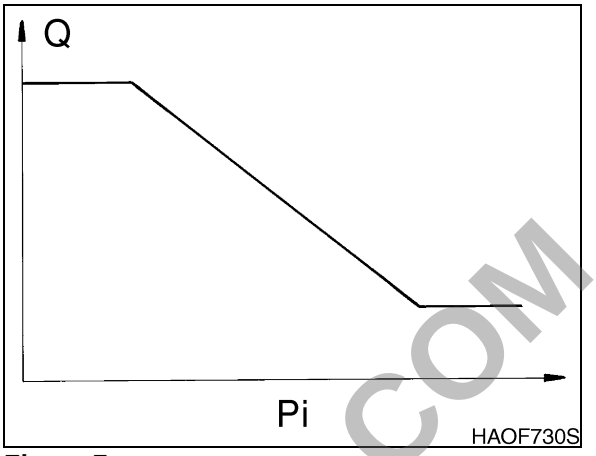

Figure 7

PREVIEW - YOUFIXTHIS.COM

Download full manual at youfixthis.com

B. In addition, orifice C which follows a parallel path to the travel side of the valve, allows flow of surplus hydraulic fluid to the left, right travel motors and acts to minimize sudden changes in travel speeds.

PLUNGER REPLACEMENT

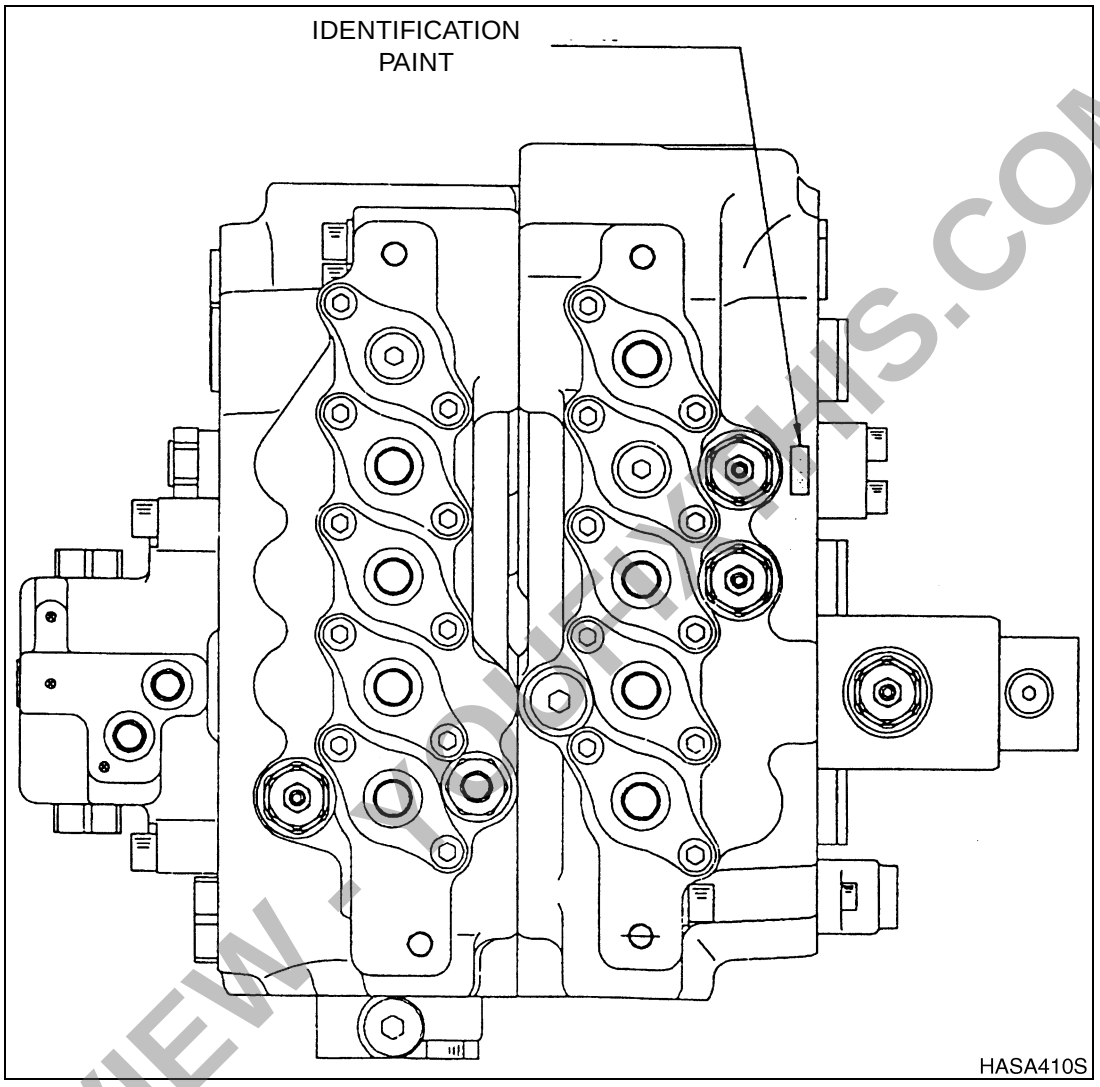

Figure 6

1. The plunger is selected and toothed into the housing; as a result it is a non serviceable part and can not be replaced on site.

   A. If for some reason it needs to be replaced, please contact us with the following information;

      Make and/or model number

      Identification color for selected teething as inscribed on the name plate.

   B. Identification color is painted on the right or left edge of the machine body. It is visible from the bottom if the paint has been removed.

PREVIEW - YOUFIXTHIS.COM

Download full manual at youfixthis.com

High Pressure Adjustment

1. Install an accurate pressure gauge at the discharge outlet of the hydraulic pump.
2. Start the engine and drive hydraulic pump at normal RPM.
3. Completely stroke one of BM-up, AM or BKT plungers and read pressure gauge.
4. Adjust pressure by turning sleeve (7) while monitoring pressure gauge. Each 1/4 turn changes pressure by approximately 45 kg/sq cm (640 psi).

IMPORTANT
The relief valve is extremely sensitive and sudden extreme changes should be avoided.

5. Tighten hexagonal nut (3) while sleeve (7) is secured. Recheck high side pressure.

Tightening torque	6.0 kg•m (43.40 ft lbs)

Low Pressure Adjustment

1. After the High Pressure adjustment has been completed, Low Pressure adjustment can be made by turning the Adjust screw (1).
2. After the desired pressure has been adjusted, tighten hexagonal nut (2) while adjust screw (1) is secured. Recheck low side pressure.

Tightening torque	6.0 kg•m (43.40 ft lbs)

PREVIEW - YOUFIXTHIS.COM

Download full manual at youfixthis.com

13. Remove boot (3) and nut (2) from handle assembly.

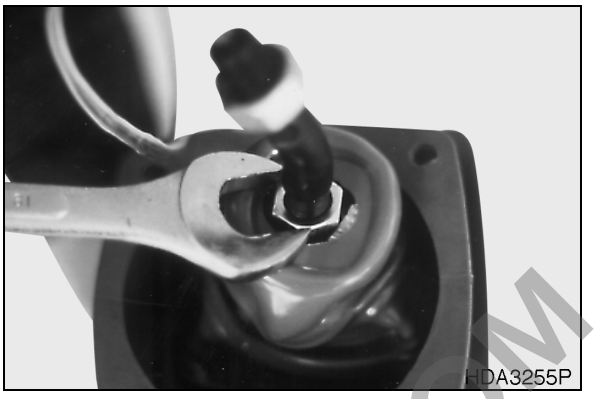

Figure 18

PREVIEW - YOUFIXTHIS.COM

Download full manual at youfixthis.com

HYDRAULIC SCHEMATIC (S220LL)

⚠ CAUTION!

Follow all safety recommendations and safe shop practices outlined in the front of this manual or those contained within this section.

Always use tools and equipment that is in good working order.

Use lifting and hoisting equipment capable of safely handling load.

Remember, that ultimately safety is your own personal responsibility.

MODEL	SERIAL NUMBER RANGE
Solar 220LL	1001 and Up

PREVIEW - YOUFIXTHIS.COM

Copyright 1999 Daewoo

March 1999

Download full manual at youfixthis.com

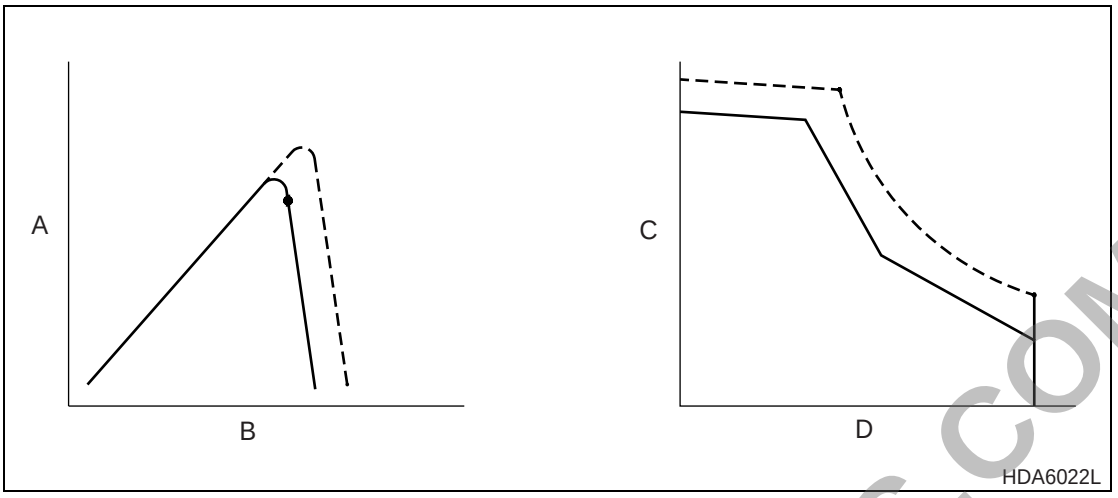

Figure 19

Reference Number	Description
A	Engine horsepower (hp)
B	Engine Speed (rpm)
C	Pump discharge volume (liters/min)

Reference Number	Description
D	Pump discharge pressure (kg/cm^2)

3. Power Mode I

Power Mode I is used for light work which does not require high speed operation. This mode is ideal for precise minute work. The noise and fuel consumption is lower than Power Mode II.

The current to the E.P.P.R. valve controlling the pump discharge volume is shut off. If the engine control dial is set to the highest position, the engine speed is reduced to approximately 80% of the maximum speed.

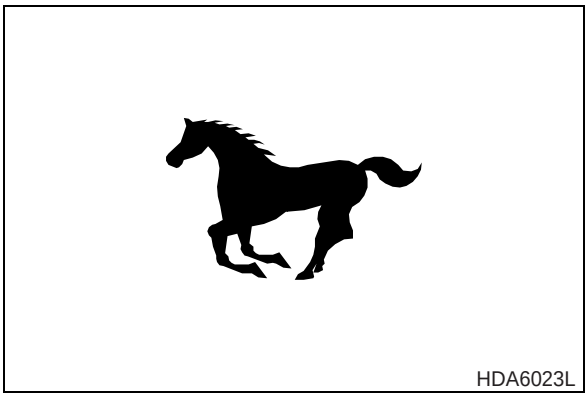

Figure 20

PREVIEW - YOUFIXTHIS.COM

Download full manual at youfixthis.com

PREVIEW ONLY

You're viewing 25 of 576 pages

The full manual includes:

- All 576 pages, complete
- Searchable PDF (find any keyword)
- No watermarks
- Instant download
- Print-ready quality

GET FULL MANUAL NOW

Daewoo Solar 220LL, Solar 290LL Shop Manual

Scan or click anywhere
youfixthis.com

Click anywhere on this page to get the full manual