DOOSAN
Infracore

SPECIFICATIONS FOR SOLAR 225LC-V

⚠ CAUTION!

Follow all safety recommendations and safe shop practices outlined in the front of this manual or those contained within this section.

Always use tools and equipment that is in good working order.

Use lifting and hoisting equipment capable of safely handling load.

Remember, that ultimately safety is your own personal responsibility.

MODEL	SERIAL NUMBER RANGE
Solar 225LC-V	1001 and UP

PREVIEW - YOUFIXTHIS.COM

Copyright 2002 Daewoo

October 2002

Download full manual at youfixthis.com

1. BATTERY
2. FUEL TANK FILL CAP
3. FUEL TANK
4. HYDRAULIC OIL TANK
5. PUMPS
6. MUFFLER
7. COUNTERWEIGHT
8. ENGINE
9. RADIATOR AND OIL COOLER
10. AIR CLEANER
11. CONTROL VALVES
12. ARM CYLINDER
13. BOOM
14. BOOM CYLINDER
15. CAB
16. SEAT
17. CENTER JOINT
18. SWING MOTOR
19. PRECLEANER
20. TRAVEL MOTOR
21. LOWER ROLLER
22. UPPER ROLLER
23. TRACK GUIDE
24. TRACK ADJUSTER
25. IDLER
26. TRACK LINK AND SHOE
27. TRAVEL LEVER
28. WORK LEVER (JOYSTICK) CONTROLS
29. TOOTH POINT
30. SIDE CUTTER
31. BUCKET
32. PUSH LINK
33. GUIDE LINK
34. BUCKET CYLINDER
35. ARM

PREVIEW - YOUFIXTHIS.COM

Download full manual at youfixthis.com

REMOVAL

⚠ CAUTION!

Avoid disassembling cab if there are strong wind gusts, which could catch large surface area of cab shell and push it sideways during lift.

1. Park on firm and level ground.
2. Lower front attachment (bucket) to the ground.
3. Shut down engine.
4. Set safety lever on "RELEASED" position.
5. Turn starter switch "ON."

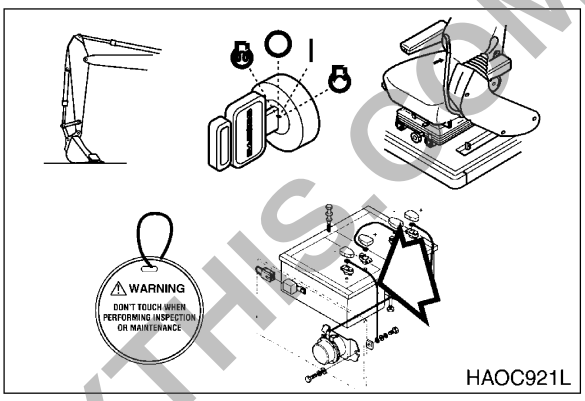

Figure 1

⚠ WARNING!

If engine must be run while performing maintenance, use extreme care. Always have one person in the cab at all times. Never leave the cab with the engine running.

6. Fully stroke work levers (joysticks) in all directions to relieve pressure from accumulators.
7. Set safety lever on "LOCK" position.
8. Turn key to "OFF" position and remove from starter switch.
9. Hang maintenance warning tag on controls.
10. Disconnect negative (-) battery cable leading to frame from battery.
11. Prepare cab shell for removal by disconnecting wiring connectors for:
    - A. Cab interior lighting.
    - B. External light wiring.
    - C. Radio antenna and connections.
    - D. Wiper/washer connections.

NOTE: Control console wiring harnesses and hydraulic piping lines that pass through the floor of the cab do not need to be disassembled.

NOTE: If unit is equipped with a cab protective structure (for forestry, or hazardous working conditions), it must be removed.

PREVIEW - YOUFIXTHIS.COM

Download full manual at youfixthis.com

MODEL	SERIAL NUMBER RANGE
Solar 170W-V	1001 and Up
Solar 180W-V	1001 and Up
Solar 200W-V	0001 and Up
Solar 210W-V	1001 and Up
Solar 220LC-V	0001 and Up
Solar 220LL	1001 and Up
Solar 220N-V	1001 and Up
Solar 225LC-V	1001 and Up
Solar 225NLC-V	1001 and Up
Solar 250LC-V	1001 and Up
Solar 255LC-V	1001 and Up
Solar 290LC-V	0001 and Up
Solar 290LL	1001 and Up
Solar 300LC-V	1001 and Up
Solar 300LL	1001 and Up
Solar 330LC-V	1001 and Up
Solar 340LC-V	1001 and Up
Solar 400LC-V	1001 and Up
Solar 420LC-V	1001 and Up
Solar 450LC-V	1001 and Up
Solar 470LC-V	1001 and Up

TABLE OF CONTENTS

General Description 3
Theory of Operation 3
Troubleshooting 4
Replacement of Rotor and Vane 4
Replacement of Rear Cover 5
Replacement of Armature 6

PREVIEW - YOUFIXTHIS.COM

Download full manual at youfixthis.com

AIR-CONDITIONING SYSTEM CIRCUIT DIAGRAM

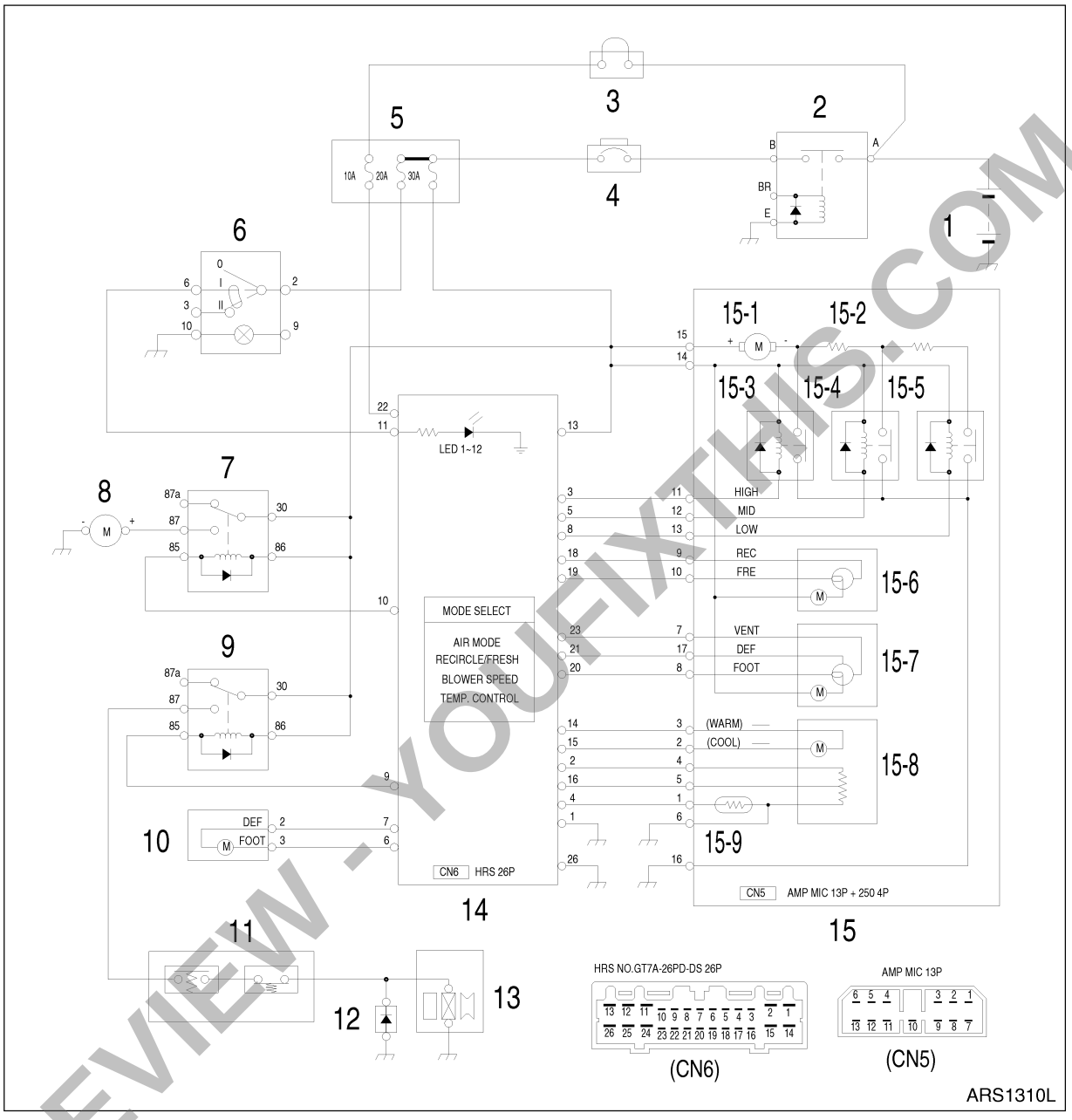

Figure 13

PREVIEW - YOUFIXTHIS.COM

Download full manual at youfixthis.com

LIGHTING SYSTEM

LIGHTING SYSTEM CIRCUIT DIAGRAM

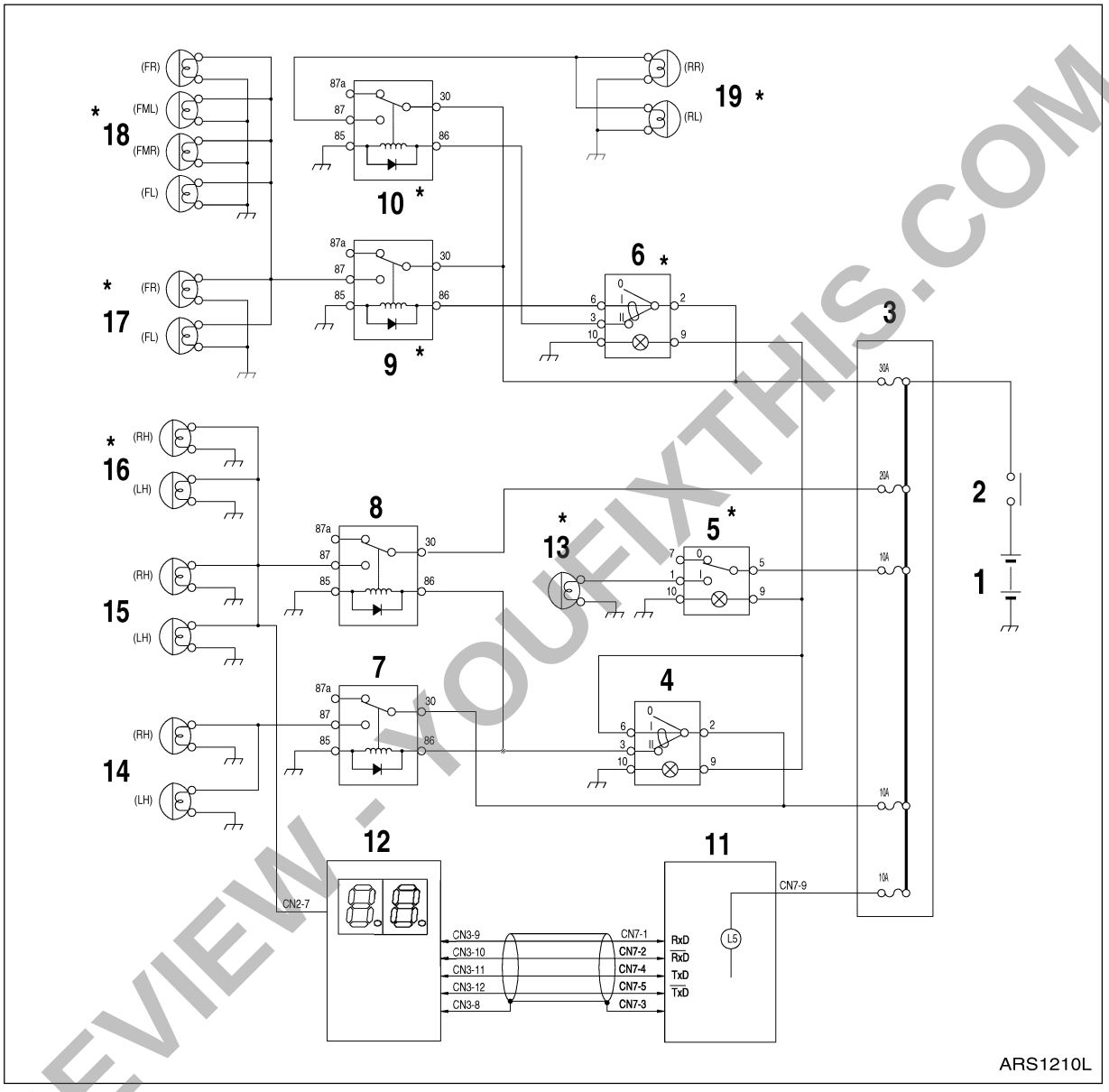

Figure 68

PREVIEW - YOUFIXTHIS.COM

Download full manual at youfixthis.com

DOOSAN
Infracore

TRACK EXCAVATOR SAFETY

⚠ CAUTION!

Follow all safety recommendations and safe shop practices outlined in the front of this manual or those contained within this section.

Always use tools and equipment that is in good working order.

Use lifting and hoisting equipment capable of safely handling load.

Remember, that ultimately safety is your own personal responsibility.

MODEL	SERIAL NUMBER RANGE
Solar 130LC-V	0001 and Up
Solar 170LC-V	1001 and Up
Solar 220LC-V	0001 and Up
Solar 220N-V	1001 and Up
Solar 225LC-V	1001 and Up
Solar 225NLC-V	1001 and Up
Solar 250LC-V	1001 and Up
Solar 255LC-V	1001 and Up
Solar 290LC-V	0001 and Up
Solar 300LC-V	1001 and Up
Solar 300LL	1001 and Up
Solar 330LC-V	1001 and Up
Solar 340LC-V	1001 and Up
Solar 400LC-V	1001 and Up
Solar 420LC-V	1001 and Up
Solar 450LC-V	1001 and Up
Solar 470LC-V	1001 and Up

PREVIEW - YOUFIXTHIS.COM

Copyright 2002 Daewoo

November 2002

Download full manual at youfixthis.com

Swing Motor.....S0707200
Travel Motor (With Gearbox) (GM35VL).....S0707330
Main Pump (With Regulator) S0708320
Main Control Valve (Kayaba)..... S0709401K
Pilot Control Valve (Work Lever / Joystick)..... S0709451K
Travel Control Valve (With Damper)..... S0709820K
Hydraulic Schematic (Solar 225LC-V/225NLC-V) S0792105K

Electrical System

Electrical System S0802220K
Electrical Schematic (Solar 225LC-V/225NLC-V)..... S0892105K

Attachments

Boom and Arm.....S0902010
Bucket..... S0904015K

PREVIEW - YOUFIXTHIS.COM

Download full manual at youfixthis.com

BATTERY

BATTERY HAZARD PREVENTION

Battery electrolyte contains diluted sulfuric acid and batteries generate hydrogen gas. Hydrogen gas is highly explosive, and mistakes in handling them can cause serious injury or fire. To prevent problems, always do the following;

- Do not smoke or bring any flame near the battery.
- When working with batteries, ALWAYS wear safety glasses and rubber gloves.
- If you spill battery electrolyte on yourself or your clothes, immediately flush the area with water.
- If battery electrolyte gets into your eyes, flush them immediately with large quantities of water and see a doctor at once.
- If you accidentally drink battery electrolyte, drink a large quantity of water or milk, raw egg or vegetable oil. Call a doctor or poison prevention center immediately.
- When cleaning the top surface of the battery, wipe it with a clean, damp cloth. Never use gasoline, thinner, or any other organic solvent or detergent.
- Tighten the battery caps securely.
- If the battery electrolyte is frozen, do not charge the battery or start the engine with power from another source. There is danger that the battery may catch fire.
- When charging the battery or starting with power from another source, let the battery electrolyte melt and check that there is no leakage of battery electrolyte before starting the operation.
- Always remove the battery from the machine before charging.

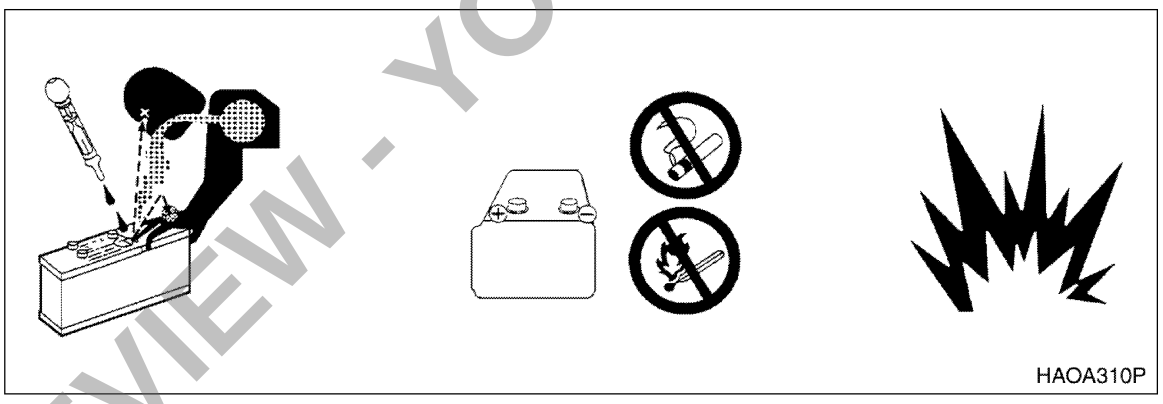

Figure 39

PREVIEW - YOUFIXTHIS.COM

Download full manual at youfixthis.com

NOTE: Grease lip seals before assembly.

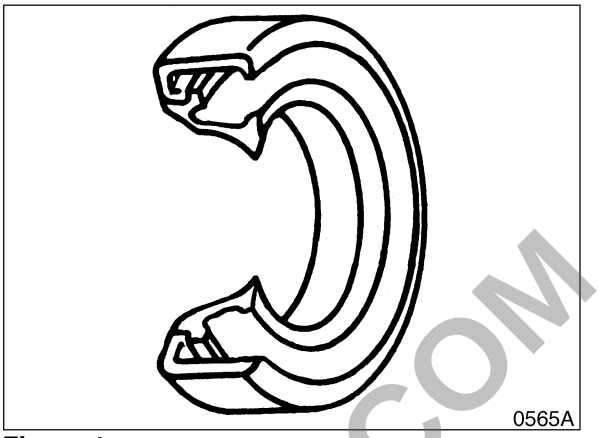

Figure 1

CLEANING AND INSPECTION

GENERAL GUIDELINES

All parts must be clean to permit an effective inspection. During assembly, it is very important that no dirt or foreign material enters unit being assembled. Even minute particles can cause malfunction of close fitting parts such as thrust bearing, matched parts, etc.

⚠ WARNING!

Care should be exercised to avoid inhalation of vapors, exposure to skin and creating fire hazards when using solvent type cleaners.

1. Clean all metal parts thoroughly using a suitable cleaning fluid. It is recommended that parts be immersed in cleaning fluid and moved up and down slowly until all oils, lubricants, and/or foreign materials are dissolved and parts are thoroughly clean.
2. For bearings that can be removed, soak them in a suitable cleaning fluid for a minute or two, then remove bearings from cleaning fluid and strike flat against a block of wood to dislodge solidified particles of lubricant. Immerse again in cleaning fluid to flush out particles. Repeat above operation until bearings are thoroughly clean. To dry bearings, use moisture-free compressed air. Be careful to direct air stream across bearing to avoid spinning bearings that are not lubricated. DO NOT SPIN BEARINGS WHEN DRYING; bearings may be rotated slowly by hand to facilitate drying process.
3. Carefully inspect all bearing rollers, cages and cups for wear, chipping or nicks to determine condition. Do not replace a bearing cone or cup individually without replacing mating cup or cone at the same time. After inspection, dip bearings in light weight oil and wrap in clean lintless cloth or paper to protect them until installation.

   For those bearings that are to be inspected in place; inspect bearings for roughness of rotation, scoring, pitting, cracked or chipped races. If any of these defects are found, replace bearings. Also inspect defective bearing housing and/or shaft for grooved, galled or burred conditions that indicate bearing has been turning in its housing or on its shaft.
4. It is more economical to replace oil seals, O-rings, sealing rings, gaskets and snap rings when unit is disassembled than waiting for premature failures; refer to latest Micro Fiche and/or Parts Book for replacement items. Be extremely careful when installing sealing members, to avoid cutting or

PREVIEW: YOUFIXTHIS.COM
Download full manual at youfixthis.com

INSTALLATION

1. Raise engine compartment cover.
2. Using suitable lifting device capable of handling load, raise counterweight (2, Figure 5) into position just above support frame (6) leaving counterweight suspended. Verify that counterweight is level and even.

   NOTE: Leave counterweight (2, Figure 5) suspended 3 mm (0.125") above support frame (6) until all four mounting bolts (4) are started in counterweight mounting holes.
3. Slide washers/spacers (5, Figure 5) onto bolts (4). Apply Loctite #242 to mounting bolt threads.
4. Install four bolts (4, Figure 5) with washers/spacers (5) into counterweight until washers/spacers contact support frame. Fully lower counterweight onto support frame and finish tightening bolts.

   NOTE: Tighten bolts (4, Figure 5) to values shown in following table.

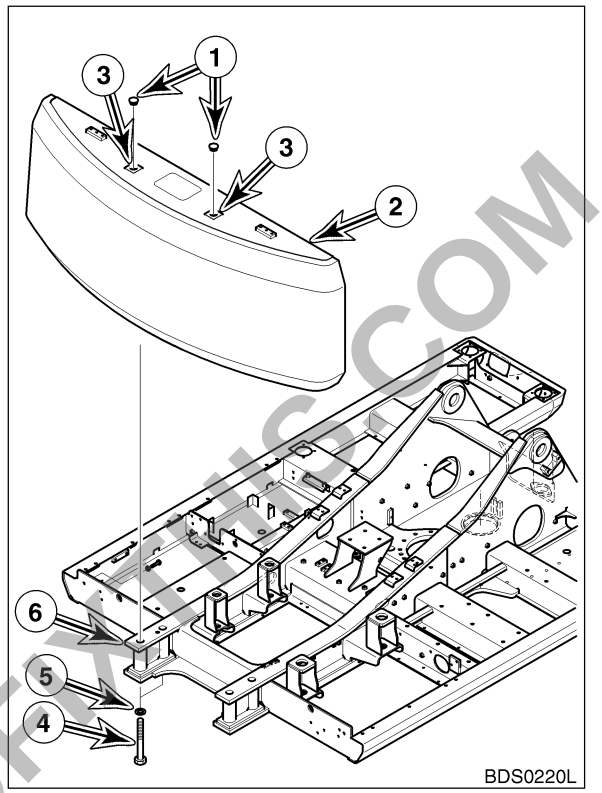

Figure 5

Model	Bolt Torque
Solar 225LC-V Solar 255LC-V Solar 300LC-V Solar 300LL Solar 340LC-V Solar 420LC-V Solar 470LC-V	250 kg•m (1,807 ft lb)
Solar 225NLC-V	150 kg•m (1,085 ft lb)

5. Remove lifting device and lifting eyes from counterweight lifting holes (3, Figure 5).
6. Install two caps (1, Figure 5) in lifting holes (3).
7. Connect negative (-) battery cable to battery.

PREVIEW - YOUFIXTHIS.COM

Download full manual at youfixthis.com

11. Pry away the front cover plate oil seal and the O-ring (29). The oil seal should normally be replaced each time the cover plate is removed. Inspect the O-ring carefully for any evidence of distortion, hardening or other damage.

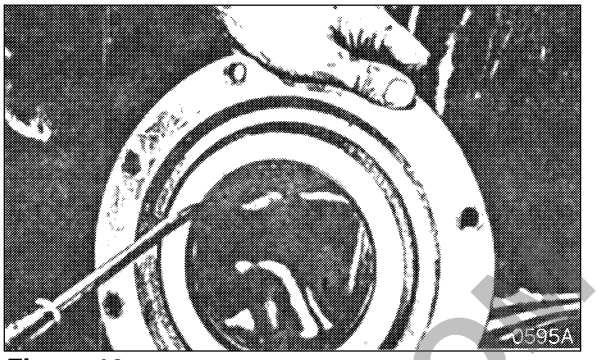

Figure 18

12. Tighten ring bolts into the end of the drive shaft. Attach evenly balanced slings to a hoist or other lifting assist and carefully withdraw the drive shaft. Tap the housing with a plastic or other soft-faced hammer if there is any sticking or resistance.

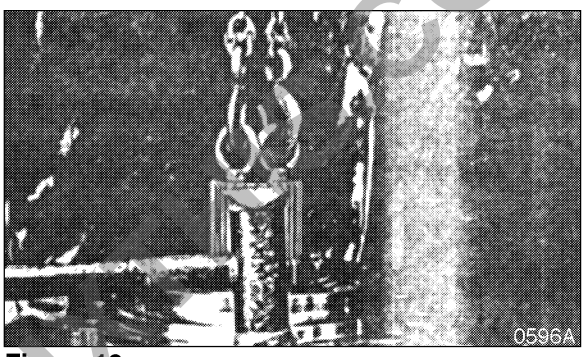

Figure 19

13. Remove the thrust plate.

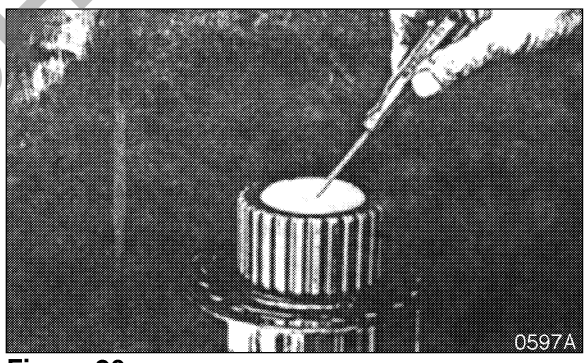

Figure 20

14. Further disassembly of the drive shaft requires the use of a hydraulic press. Use the drive shaft front bearing jig to separate the bearing and front seal (11). Remove the stop ring (34) on the opposite end of the drive shaft in order to remove the smaller bearing (23) on the inner end of the drive shaft. Make an index reference mark - a dot, or an arrow - on bearings to indicate which end of the bearing faces up, toward the output end of the drive shaft. Check the reference marks when installing replacement bearings to make sure they will not be positioned the wrong way around.

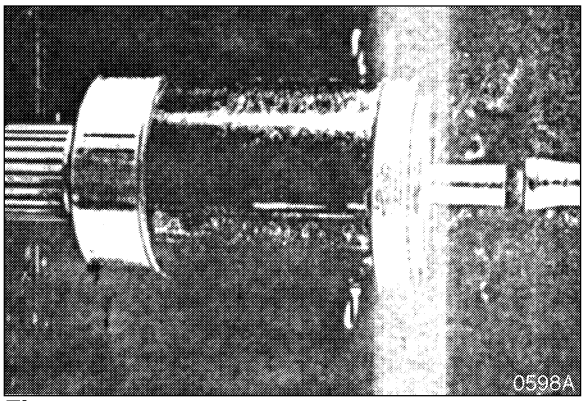

Figure 21

PREVIEW - YOUFIXTHIS.COM

Download full manual at youfixthis.com

UPPER ROLLER REASSEMBLY

1. Degrease, clean and dry all parts before reassembly. Insert bushing (10, Figure 46) into the roller (6).

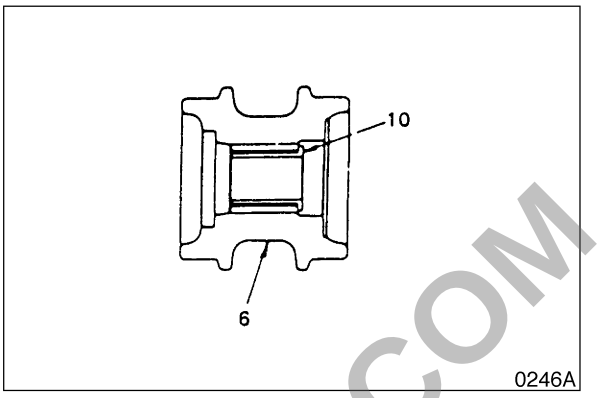

Figure 46

2. Insert group seal (8, Figure 47) into the roller (6) and bushing.

   NOTE: Apply clean engine oil to the joint side of the group seal. Apply grease to the group seal O-ring.

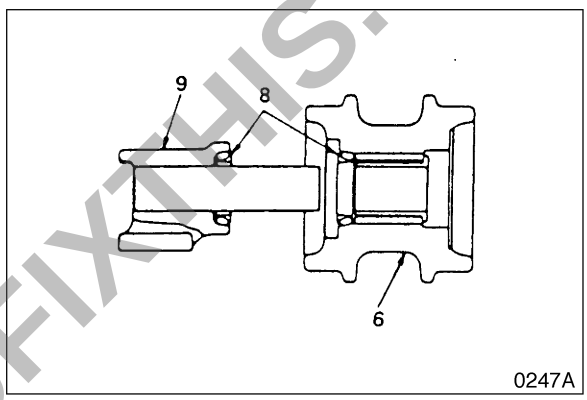

Figure 47

3. Install the axle, washer (5, Figure 48) and bolt (4).
4. Attach group seal (8, Figure 39) to the roller (6, Figure 48) and cover (3).
5. Insert the O-ring (11, Figure 48) to the cover. Attach cover (3) and bolt (2) to the roller.
6. Fill with 200 cc (6.8 fluid ounces) of engine oil.

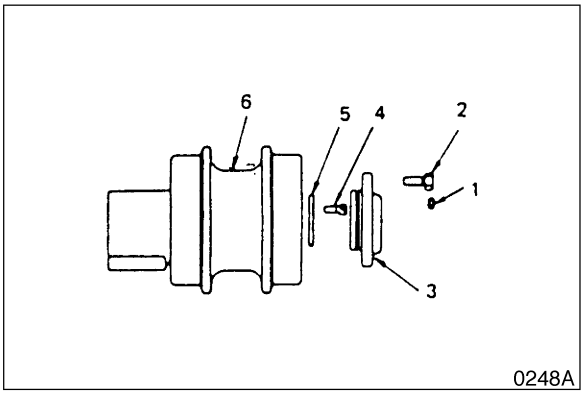

Figure 48

PREVIEW - YOUFIXTHIS.COM

Download full manual at youfixthis.com

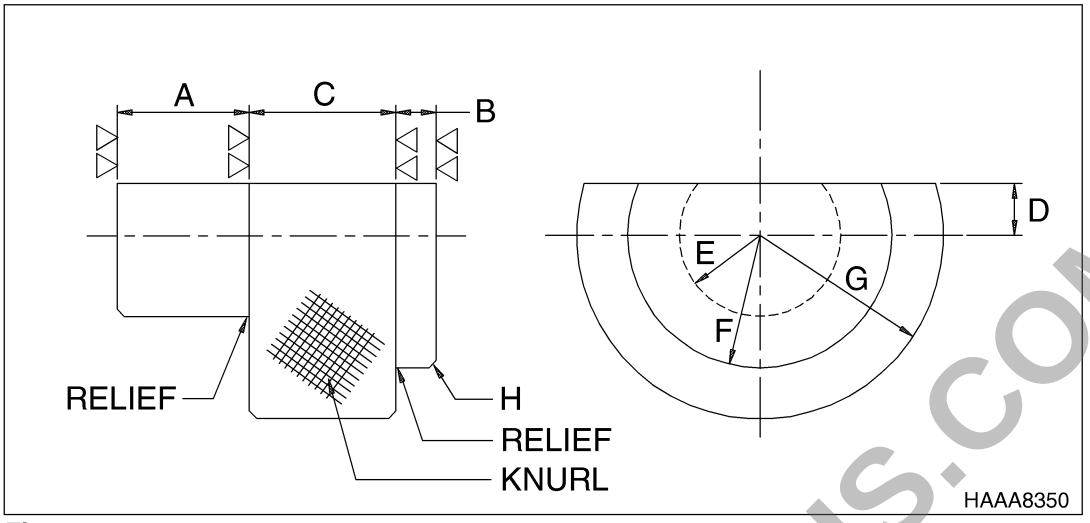

Figure 5

Dimensional Details for Figure 5		
Dimension	**Measurement**	**Models**
A	18 ±0.1 mm (0.7087 ±0.0039 in)	DD80L
B	5.5 ±0.1 mm (0.2165 ±0.0039 in)	S330LC-III, S330LC-V, S400LC-III, S400LC-V, S450LC-V
C	20.0 mm (0.787 in)	
D	7.0 mm (0.275 in)	
E	11.0 mm (0.433 in) Radius	
F	18.0 mm (0.708 in) Radius	
G	30.0 mm (1.181 in) Radius	
H	1.0 mm (0.039 in) x 45˚ Chamfer	

PREVIEW - YOUFIXTHIS.COM

Download full manual at youfixthis.com

SWING SYSTEM TROUBLESHOOTING

PRECAUTIONS/INITIAL CHECKS

1. Stop work. Release all weight or any type of load safely before proceeding. Avoid risking injury or adding to damage.
2. Shut down engine and disengage control functions until initial tests are ready to be made.

⚠ WARNING

Prevent possible injury and/or loss of operating control. Stop work and park the excavator at the first indication of:

1. **Equipment breakdown**
2. **Inadequate control response**
3. **Erratic performance**

Stop the machine, put the boom and arm in the inoperative (overnight park) position and begin by making the fastest, simplest checks first:

- Check oil level.
- Check for overheating, oil leaks, external oil cooler clogging or broken fan belt. Consult service record for prior repair/service work.
- Drain some tank oil to a clean, clear container. Look for metal shavings/grit, cloudiness/water or foam/air bubbles in the oil.
- Check for wobble through the engine/pump flex coupling. Run engine with the pump input hydraulic power control nut turned to the lowest power to check the engine.
- Investigate unusual operating noises or vibration. Check for loose bolts, connections.

SWING RELIEF VALVE CHECKING AND ADJUSTMENT

Make a check of operating pressures through the swing relief valve if:

- The swing motor fails to turn.
- Swings in one direction only.
- Swings but continues to coast.
- There is drifting on a slope.

1. Check operation by connecting:

A. Two 600 bar (8,700 psi) pressure gauges to the inlet and outlet measuring ports on top of the swing motor.

Pressure should be between 280 and 290 bar (4,060 psi and 4,205 psi), with both swing locks engaged. With swing locks released, during full acceleration and deceleration, pressure should approach 250 bar (3,625 psi) in each direction.

B. Connect a 60 bar (870 psi) pressure gauge at the “SH” port of the hydraulic brake.

Pressure should always stay at or above 13 bar (190 psi) when operating swing, boom or arm.

C. Connect a 10 bar (145 psi) gauge at the motor makeup valve.

PREVIEW - YOUFIXTHIS.COM
Download full manual at youfixthis.com

PISTON JIG

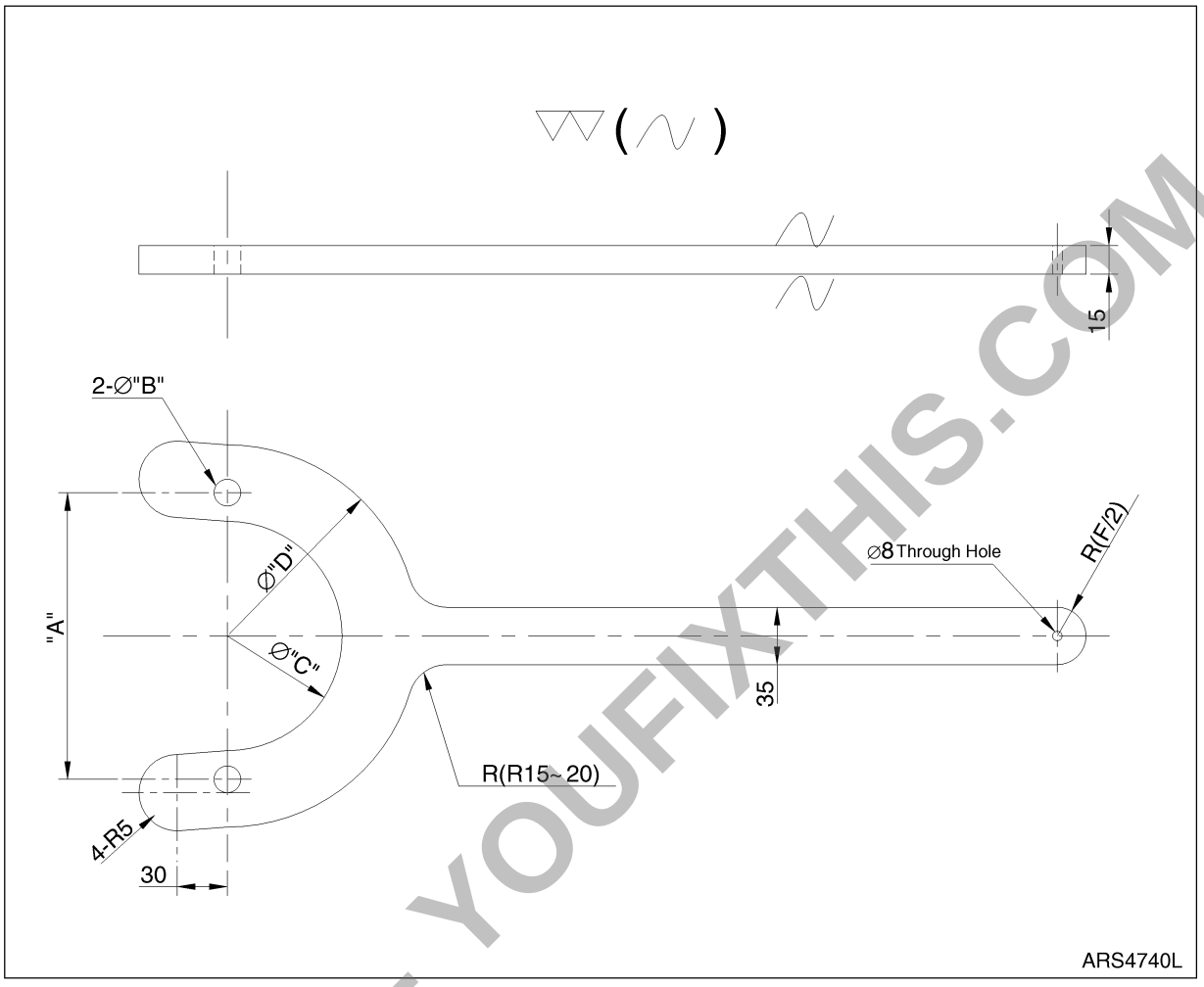

Figure 7

Material SM45C (AISI 1045)

Rockwell Harden from 22 - 27

Oil Quench

PREVIEW - YOUFIXTHIS.COM

Download full manual at youfixthis.com

PREVIEW - YOUFIXTHIS.COM

Download full manual at youfixthis.com

SPECIFICATIONS

Name Plate Identification

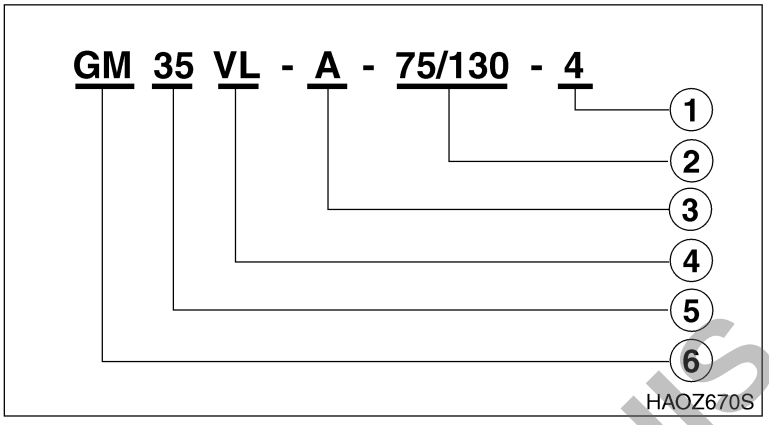

Figure 14

Reference Number	Description
1	Design Number (Product Classification Number)
2	Volume Classification Number (cc/rev)
3	Deceleration Classification Number (A=1/56)
4	Model Classification Number
5	Size Number
6	Machine Type Symbol

PREVIEW - YOUFIXTHIS.COM

Download full manual at youfixthis.com

RV GEAR GAP MEASUREMENT AND ADJUSTMENT

1. Tap lightly together with press metal fitting (A, Figure 100) and hammer, the outer wheel of conical roller bearing (B) (22) that is attached to crankshaft (9) of RV gear assembly (C).
2. Install the thinnest shim (13) into hold flange (3), assemble snap ring (20) into snap ring groove.
3. Tap lightly around the snap ring with hammer.
4. Measure clearance by inserting thickness gage between snap ring (20) and shim (13).
5. Subtract from this value the known value of the shim already inserted to obtain the required shim thickness.

   Select a shim which is within - 0.05 mm of the obtained value.

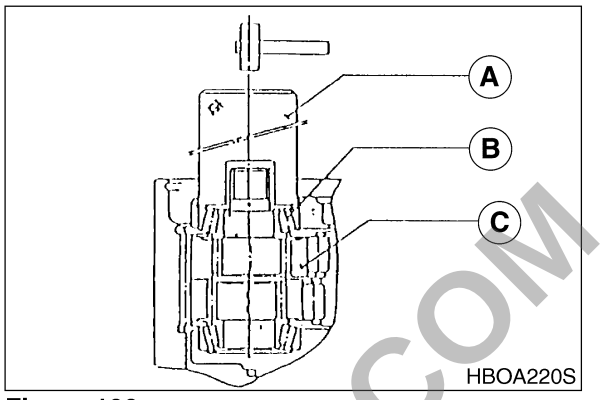

Figure 100

PREVIEW - YOUFIXTHIS.COM

Download full manual at youfixthis.com

REASSEMBLY

PUMP REGULATOR REASSEMBLY

1. Install O-ring (733) and compensator piston (621) to piston case (622). Insert assembly into compensator bore.
2. Insert compensator piston rod (623) into piston bore.

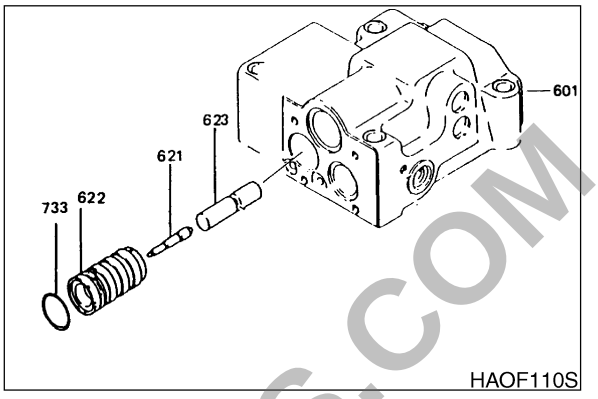

Figure 38

3. Assemble lever (612) to casing using pin (875).

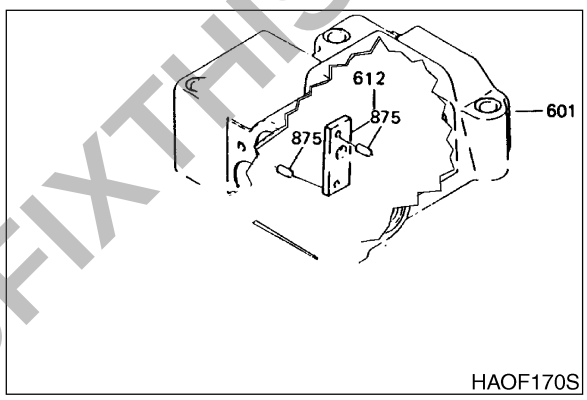

Figure 39

4. Install snap ring (836) onto spool sleeve (651) and insert sleeve into spool bore. Insert spool (652) into sleeve (already installed in block).

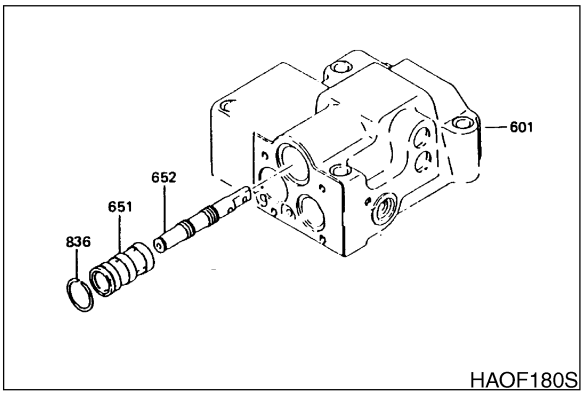

Figure 40

PREVIEW - YOUFIXTHIS.COM

Download full manual at youfixthis.com

Relief Operation

If excessive oil flows into passage (L2 (R2)), pressure generated at passage (L2 (R2)) by orifice (Lc1 (Rc1)) goes to back chamber of poppet, and poppet operates by the difference of pressurized area between passage and back chamber.

By operation of this poppet, oil flows from passage through plug and drill hole to tank passage (Ta). By this action, generation of excessive pressure in low pressure relief signal port is prevented.

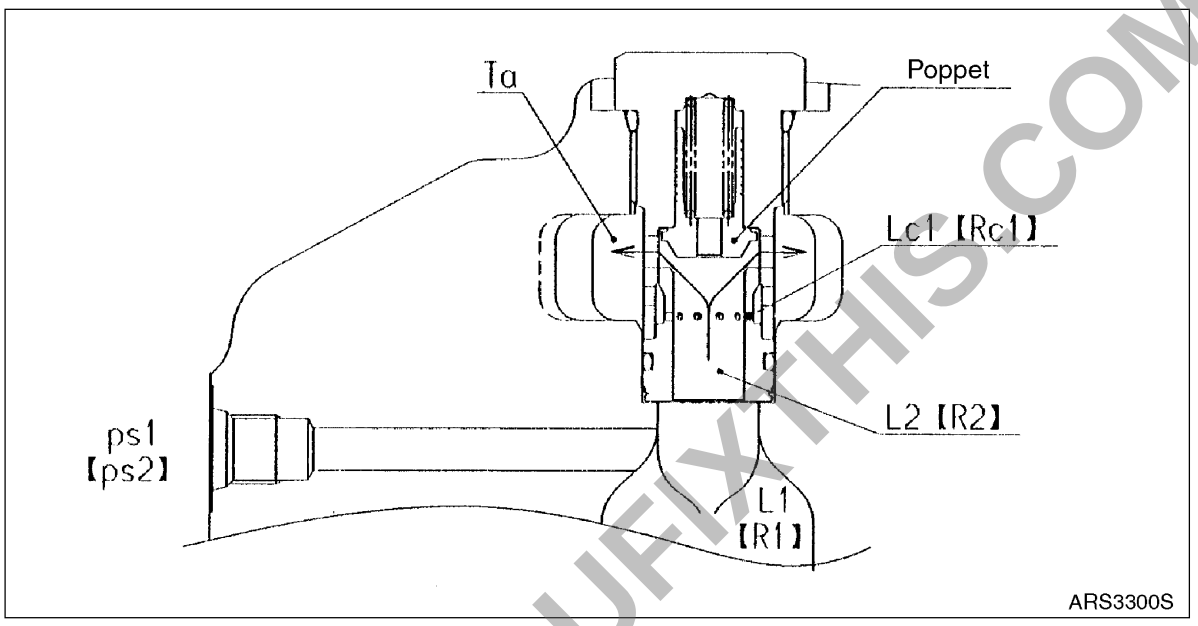

Figure 31

PREVIEW - YOUFIXTHIS.COM

Download full manual at youfixthis.com

19. Remove four bolts (3, Figure 7) and cover (2), and pull remote control valve R.H. (1) out.

20. Tag and disconnect hoses from remote control valve R.H. (1, Figure 7). Plug and cap hoses and ports to prevent contamination from entering hydraulic system or component.

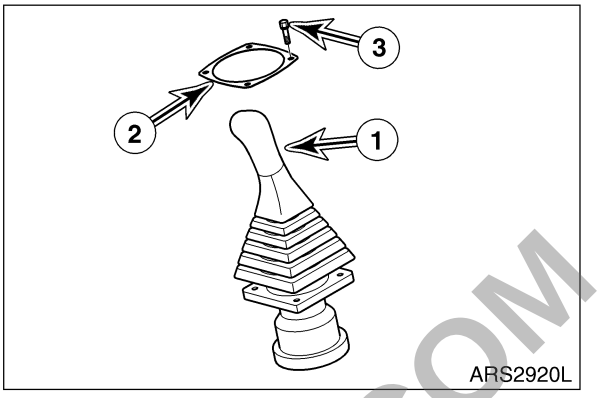

Figure 7

PREVIEW - YOUFIXTHIS.COM

Download full manual at youfixthis.com

HYDRAULIC SCHEMATIC (SOLAR 225LC-V/ 225NLC-V)

⚠ CAUTION!

Follow all safety recommendations and safe shop practices outlined in the front of this manual or those contained within this section.

Always use tools and equipment that is in good working order.

Use lifting and hoisting equipment capable of safely handling load.

Remember, that ultimately safety is your own personal responsibility.

MODEL	SERIAL NUMBER RANGE
Solar 225LC-V	1001 and Up
Solar 225NLC-V	1001 and Up

PREVIEW - YOUFIXTHIS.COM

Copyright 2003 Daewoo

January 2003

Download full manual at youfixthis.com

FILTER/OIL INFORMATION

This mode displays total operating hours of filters and oils.

After changing the filter and oil, reset the operating hour and then the operating hours until the next service interval can be easily checked.

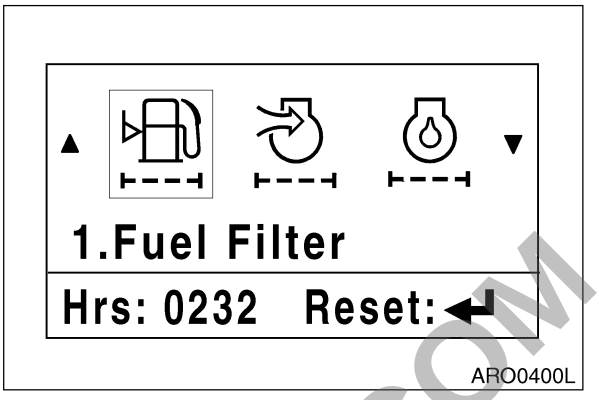

Figure 16

Menu Display Order and Icon Explanation

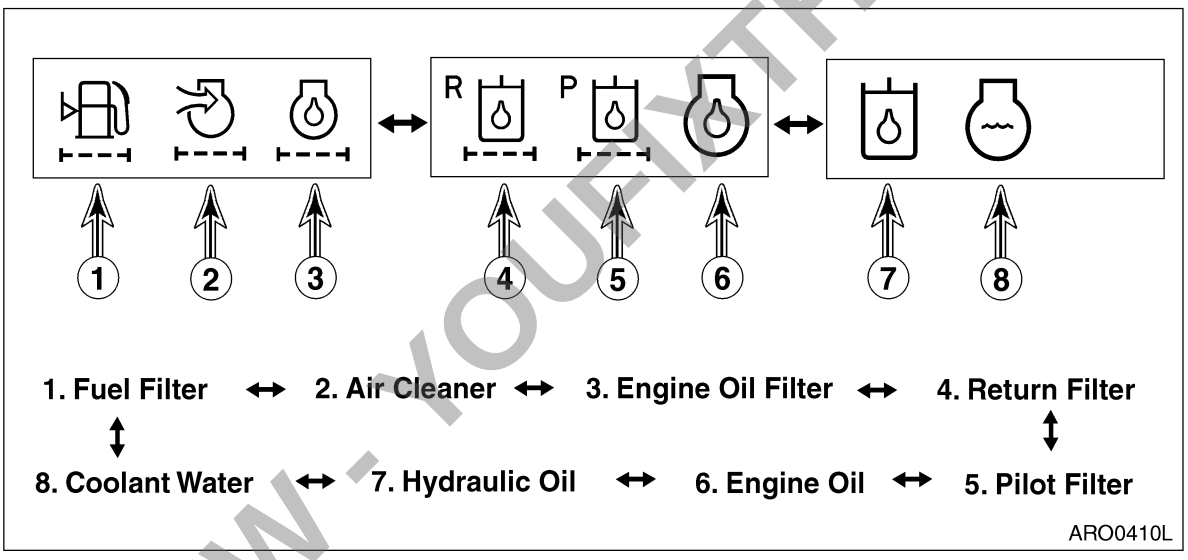

Figure 17

PREVIEW - YOUFIXTHIS.COM

Download full manual at youfixthis.com

AUTOMATIC TRAVEL SPEED CONTROL - CIRCUIT DIAGRAM

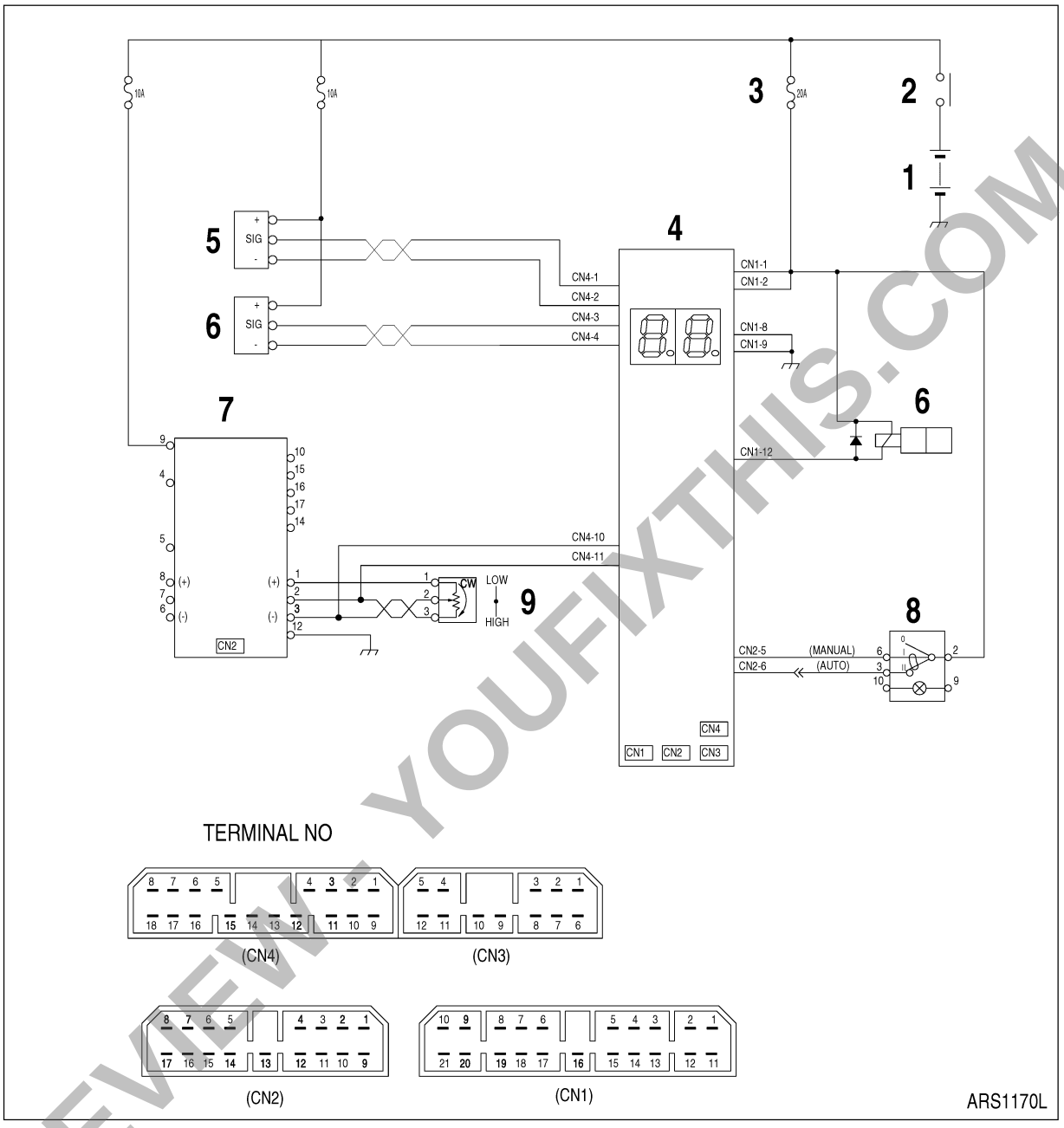

Figure 61

Reference Number	Description
1	Battery
2	Battery Relay
3	Fuse
4	e-EPOS Controller
5	Pressure Sensor (Front Pump)

Reference Number	Description
6	Pressure Sensor (Rear Pump)
7	Engine Throttle Controller
8	Automatic Travel Select Switch
9	Engine Control Dial
10	Solenoid Valve (High Speed)

PREVIEW - YOUFIXTHIS.COM

Download full manual at youfixthis.com

PREVIEW ONLY

You're viewing 25 of 666 pages

The full manual includes:

- All 666 pages, complete
- Searchable PDF (find any keyword)
- No watermarks
- Instant download
- Print-ready quality

GET FULL MANUAL NOW

Doosan Solar 225LC-V Shop Manual

Scan or click anywhere
youfixthis.com

Click anywhere on this page to get the full manual