Solar 225LL

Shop Manual

023-00078E

Serial Number 1001 and Up

PREVIEW - YOUFIXTHIS.COM

Daewoo reserves the right to improve our products in a continuing process to provide the best possible product to the market place. These improvements can be implemented at any time with no obligation to change materials on previously sold products. It is recommended that consumers periodically contact their distributors for recent documentation on purchased equipment.

This documentation may include attachments and optional equipment that is not available in your machine's package. Please call your distributor for additional items that you may require.

Illustrations used throughout this manual are used only as a representation of the actual piece of equipment, and may vary from the actual item.

Download full manual at youfixthis.com

TABLE OF CONTENTS

Publication Request for Proposed Revision

Safety

Track Excavator Safety S0102015K

Specifications

Specifications for Solar 225LL S0202150K

General Maintenance

General Maintenance Procedures S0302000

Standard Torques S0309000

Upper Structure

Cab S0402040K

Counterweight S0403000

Fuel Tank ..... \S0405050

Swing Bearing S0407000

Swing Reduction Gearbox S0408015K

Lower Structure and Chassis

Track Assembly S0505045K

Engine and Drive Train

Air Conditioner S0605060K

Drive Coupling (Main Pump) S0609000

Hydraulics

Hydraulic System Troubleshooting, Testing and Adjustment S0702210K

Accumulator S0703010K

Center Joint (Swivel) S0704010

PREVIEW - YOUFIXTHIS.COM

Download full manual at youfixthis.com

DAEWOO
DAEWOO HEAVY INDUSTRIES & MACHINERY LTD.

TRACK EXCAVATOR SAFETY

⚠ CAUTION!

Follow all safety recommendations and safe shop practices outlined in the front of this manual or those contained within this section.

Always use tools and equipment that is in good working order.

Use lifting and hoisting equipment capable of safely handling load.

Remember, that ultimately safety is your own personal responsibility.

MODEL	SERIAL NUMBER RANGE
Solar 225LL	1001 and Up
Solar 300LL	1001 and Up

PREVIEW - YOUFIXTHIS.COM

Copyright 2004 Daewoo

June 2004

Download full manual at youfixthis.com

GENERAL SPECIFICATIONS

COMPONENT			SPECIFICATION
Equipment weight (without grapple)			27.45 metric tons (30.3 tons)
Engine	Model		DB58TIS
	Style		Water cooled - 6 cylinders
	Rated output		150 ps @ 2,000 rpm (148 hp @ 2,000 rpm)
	Maximum torque		60 kg•m @ 1,500 rpm (434 lb ft @ 1,500 rpm)
	Fuel tank capacity		310 liters (81.84 U.S. gal.)
Hydraulic pump	Style		Axial piston
	Discharging pressure		350 kg/cm^2 (4,978.17 psi)
	Maximum discharge quantity		2 x 212 liters/minutes (2 x 56 U.S. GPM)
	Hydraulic oil tank capacity		135 liters (36 U.S. gal.)
Performance	Swing speed		12.9 rpm
	Travel speed	High speed	5.4 km/h (3.4 MPH)
		Low speed	3.0 km/h (1.9 MPH)
	Traction force	High speed	12.7 metric tons (14.0 tons)
		Low speed	20.8 metric tons (22.6 tons)
	Gradeability		35° (70% slope)
	Ground pressure		0.57 kg/cm^2 (8.11 psi)
Ground clearance			690 mm (27.17 in)
Lever operation style			Hydraulic joystick
Upper roller			2 per track
Bottom roller			9 per track

PREVIEW - YOUFIXTHIS.COM

Download full manual at youfixthis.com

DAEWOO
DAEWOO HEAVY INDUSTRIES & MACHINERY LTD.

GENERAL MAINTENANCE PROCEDURES

⚠ CAUTION!

Follow all safety recommendations and safe shop practices outlined in the front of this manual or those contained within this section.

Always use tools and equipment that is in good working order.

Use lifting and hoisting equipment capable of safely handling load.

Remember, that ultimately safety is your own personal responsibility.

MODEL	SERIAL NUMBER RANGE
ALL MODELS	ALL RANGES

PREVIEW - YOUFIXTHIS.COM

Copyright 2002 Daewoo

May 2002

Download full manual at youfixthis.com

TABLE OF CONTENTS

General Description..... 3
Solar 225LL (S/N 1001 thru 1002) 4
Solar 225LL (S/N 1003 and Up) 6

PREVIEW - YOUFIXTHIS.COM

Download full manual at youfixthis.com

TABLE OF CONTENTS

General Description..... 3
Solar 225LL..... 4

PREVIEW - YOUFIXTHIS.COM

Download full manual at youfixthis.com

REMOVAL

⚠ CAUTION!

Avoid disassembling cab if there are strong wind gusts, which could catch large surface area of cab shell and push it sideways during lift.

1. Park on firm and level ground.
2. Lower front attachment (bucket) to ground.
3. Shut down engine.
4. Set safety lever on "RELEASED" position.
5. Turn starter switch "ON."

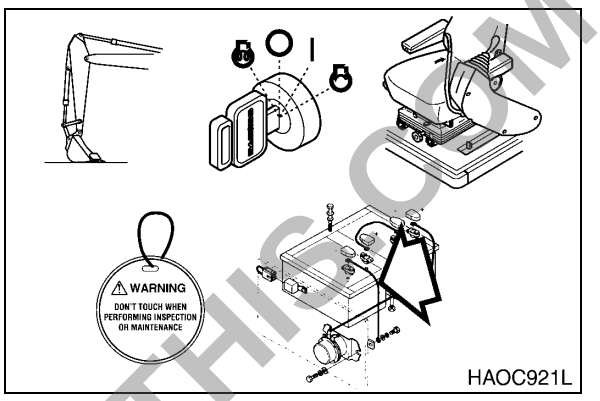

Figure 1

⚠ WARNING!

If engine must be running while performing maintenance, always use extreme caution. Always have one person in the cab at all times. Never leave the cab with engine running.

6. Fully stroke work levers (joysticks) in all directions to relieve any pressure from the accumulators.
7. Set safety lever on "LOCK" position.
8. Turn key to "OFF" position and remove from starter switch.
9. Hang a maintenance warning tag on controls.
10. Disconnect the battery cable from the negative (-) battery terminal.
11. Prepare cab shell for removal by disconnecting wiring connectors for:
    A. Cab interior lighting.
    B. External light wiring.
    C. Radio antenna and connections.
    D. Wiper/washer connections.

NOTE: *Control console wiring harnesses and hydraulic piping lines that pass through the floor of the cab do not need to be disassembled.*

NOTE: *If unit is equipped with a cab protective structure (for forestry, or hazardous working conditions), it must be removed.*

PREVIEW - YOUFIXTHIS.COM

Download full manual at youfixthis.com

TORQUE VALUES FOR STANDARD METRIC FASTENERS

NOTE: *The units for the torque values are kg•m (ft lb).*

Dia. x Pitch (mm)	Grade										
	3.6 (4A)	4.6 (4D)	4.8 (4S)	5.6 (5D)	5.8 (5S)	6.6 (6D)	6.8 (6S)	6.9 (6G)	8.8 (8G)	10.9 (10K)	12.9 (12K)
M5 x Std.	0.15 (1.08)	0.16 (1.15)	0.25 (1.80)	0.22 (1.59)	0.31 (2.24)	0.28 (2.02)	0.43 (3.11)	0.48 (3.47)	0.50 (3.61)	0.75 (5.42)	0.90 (6.50)
M6 x Std.	0.28 (2.02)	0.30 (2.16)	0.45 (3.25)	0.40 (2.89)	0.55 (3.97)	0.47 (3.39)	0.77 (5.56)	0.85 (6.14)	0.90 (6.50)	1.25 (9.04)	1.50 (10.84)
M7 x Std.	0.43 (3.11)	0.46 (3.32)	0.70 (5.06)	0.63 (4.55)	0.83 (6.00)	0.78 (5.64)	1.20 (8.67)	1.30 (9.40)	1.40 (10.12)	1.95 (14.10)	2.35 (16.99)
M8 x Std.	0.70 (5.06)	0.75 (5.42)	1.10 (7.95)	1.00 (7.23)	1.40 (10.12)	1.25 (9.04)	1.90 (13.74)	2.10 (15.18)	2.20 (15.91)	3.10 (22.42)	3.80 (27.48)
M8 x 1	0.73 (5.28)	0.80 (5.78)	1.20 (8.67)	1.00 (7.23)	1.50 (10.84)	1.35 (9.76)	2.10 (15.18)	2.30 (16.63)	2.40 (17.35)	3.35 (24.23)	4.10 (29.65)
M10 x Std.	1.35 (9.76)	1.40 (10.12)	2.20 (15.91)	1.90 (13.74)	2.70 (19.52)	2.35 (19.99)	3.70 (26.76)	4.20 (30.37)	4.40 (31.18)	6.20 (44.84)	7.20 (52.07)
M10 x 1	1.50 (10.84)	1.60 (11.57)	2.50 (18.08)	2.10 (15.18)	3.10 (22.42)	2.80 (20.25)	4.30 (31.10)	4.90 (35.44)	5.00 (36.16)	7.00 (50.63)	8.40 (60.75)
M12 x Std.	2.40 (17.35)	2.50 (18.08)	3.70 (26.76)	3.30 (23.86)	4.70 (33.99)	4.20 (30.37)	6.30 (45.56)	7.20 (52.07)	7.50 (54.24)	10.50 (75.94)	12.50 (90.41)
M12 x 1.5	2.55 (18.44)	2.70 (19.52)	4.00 (28.93)	3.50 (25.31)	5.00 (36.16)	4.50 (32.54)	6.80 (49.18)	7.70 (55.69)	8.00 (57.86)	11.20 (81.00)	13.40 (96.92)
M14 x Std.	3.70 (26.76)	3.90 (28.20)	6.00 (13.23)	5.20 (37.61)	7.50 (54.24)	7.00 (50.63)	10.00 (72.33)	11.50 (83.17)	12.00 (86.79)	17.00 (122.96)	20.00 (144.66)
M14 x 1.5	4.10 (29.65)	4.30 (31.10)	6.60 (47.73)	5.70 (41.22)	8.30 (60.03)	7.50 (54.24)	11.10 (80.28)	12.50 (90.41)	13.00 (94.02)	18.50 (11.26)	22.00 (158.12)
M16 x Std.	5.60 (40.50)	6.00 (43.39)	9.00 (65.09)	8.00 (57.86)	11.50 (83.17)	10.50 (75.94)	15.50 (112.11)	17.90 (129.47)	18.50 (133.81)	26.00 (188.05)	31.00 (224.22)
M16 x 1.5	6.20 (44.84)	6.50 (47.01)	9.70 (70.16)	8.60 (62.20)	12.50 (90.41)	11.30 (81.73)	17.00 (122.96)	19.50 (141.04)	20.00 (144.66)	28.00 (202.52)	35.50 (256.77)
M18 x Std.	7.80 (56.41)	8.30 (60.03)	12.50 (90.41)	11.00 (79.56)	16.00 (115.72)	14.50 (104.87)	21.00 (151.89)	27.50 (198.90)	28.50 (206.14)	41.00 (296.55)	43.00 (311.01)
M18 x 1.5	9.10 (65.82)	9.50 (68.71)	14.40 (104.15)	12.50 (90.41)	18.50 (133.81)	16.70 (120.79)	24.50 (177.20)	27.50 (198.90)	28.50 (206.14)	41.00 (296.55)	49.00 (354.41)
M20 x Std.	11.50 (83.17)	12.00 (86.79)	18.00 (130.19)	16.00 (115.72)	22.00 (159.12)	19.00 (137.42)	31.50 (227.83)	35.00 (253.15)	36.00 (260.38)	51.00 (368.88)	60.00 (433.98)
M20 x 1.5	12.80 (92.58)	13.50 (97.64)	20.50 (148.27)	18.00 (130.19)	25.00 (180.82)	22.50 (162.74)	35.00 (253.15)	39.50 (285.70)	41.00 (296.55)	58.00 (419.51)	68.00 (491.84)
M22 x Std.	15.50 (112.11)	16.00 (115.72)	24.50 (177.20)	21.00 (151.89)	30.00 (216.99)	26.00 (188.05)	42.00 (303.78)	46.00 (332.71)	49.00 (354.41)	67.00 (484.61)	75.00 (542.47)
M22 x 1.5	17.00 (122.96)	18.50 (133.81)	28.00 (202.52)	24.00 (173.59)	34.00 (245.92)	29.00 (209.75)	47.00 (339.95)	52.00 (44.76)	56.00 (405.04)	75.00 (542.47)	85.00 (614.80)
M24 x Std.	20.50 (148.27)	21.50 (155.50)	33.00 (238.68)	27.00 (195.29)	40.00 (289.32)	34.00 (245.92)	55.00 (397.81)	58.00 (419.51)	63.00 (455.67)	82.00 (593.10)	92.00 (655.43)
M24 x 1.5	23.00 (166.35)	35.00 (253.15)	37.00 (267.62)	31.00 (224.22)	45.00 (325.48)	38.00 (202.52)	61.00 (441.21)	67.00 (484.61)	74.00 (535.24)	93.00 (672.66)	103.00 (744.99)

PREVIEW - YOUFIXTHIS.COM

Download full manual at youfixthis.com

Symptoms	Possible Causes	Remedies
1. No rotation and –		
a. Pressure at swing motor inlet *increases*	Swing brake not releasing	Check brake engagement and disengagement, check release pressure
	Internal damage to gearbox drive train	Replace broken gears, drive train assemblies
	Overload	Reduce load weight
b. Pressure at swing motor inlet shows *no increase,* **and** the swing motor is making irregular noises	Swing motor drive shaft damage	Replace swing motor
	Internal damage to gearbox drive train	Repair/replace broken or faulty assemblies
c. Pressure at swing motor inlet shows *no increase,* but **without** irregular *noises* from the swing motor	Hydraulic pump or valve broken	Troubleshoot hydraulic system
2. Oil leakage		
a. From drive shaft	Oil seal damaged	Replace oil seal
b. From bolted connections or other assembled surfaces	Assembly compound (joint sealer) old and not sealing, bolt not tight or flange warped	Disassemble and check mating surfaces. Reapply Loctite, torque bolts to specifications
3. Excess heat		
Gearbox casing becomes excessively hot, with or without irregular noise(s) during operation	Low oil level	Replace oil, refill to specified level
	Bearings or gear worn but not completely inoperative	Repair or replace gearbox

HAOE960L

PREVIEW - YOUFIXTHIS.COM

Download full manual at youfixthis.com

PREVIEW - YOUFIXTHIS.COM

Download full manual at youfixthis.com

DAEWOO
DAEWOO HEAVY INDUSTRIES & MACHINERY LTD.

SPECIFICATIONS FOR SOLAR 225LL

⚠ CAUTION!

Follow all safety recommendations and safe shop practices outlined in the front of this manual or those contained within this section.

Always use tools and equipment that is in good working order.

Use lifting and hoisting equipment capable of safely handling load.

Remember, that ultimately safety is your own personal responsibility.

MODEL	SERIAL NUMBER RANGE
Solar 225LL	1001 and Up

PREVIEW - YOUFIXTHIS.COM

Copyright 2003 Daewoo

December 2003

Download full manual at youfixthis.com

IV. "Loctite" retaining compounds

Product	Application	Color	Notes
609	For bushings, sleeves, press fit bearings, splines and collars. For gaps to 0.0002 mm (0.005"), temperatures to 121°C (250°F).	Green	Use Locquic "N" primer for increased bond strength and all cold temperature applications.
620	For high temperatures to 232°C (450°F).	Green	Same as 609, above.
680	For high strength bonds and tight clearance gaps, to 0.00008 mm (0.002").	Green	Same as 609, above.

V. "Loctite" Adhesives

Product	Application	Color	Notes
380	Black Max instant adhesive for shock and vibration-resistant bonds.	Black	May take 120 hours to reach full cure strength.
454	Adhesive for porous surfaces.	Clear	Full strength in 24 hours.
480	Increased strength (+50%), shock and vibration-resistant.	Black	Full strength in 24 hours.

PREVIEW - YOUFIXTHIS.COM

Download full manual at youfixthis.com

4. Tighten 10 mm ring bolts into the rim of the carrier, 180 degrees apart. Use a hoist or other lifting assist to separate the No. 1 carrier assembly from the gearbox, with the No. 1 differential gear still attached.

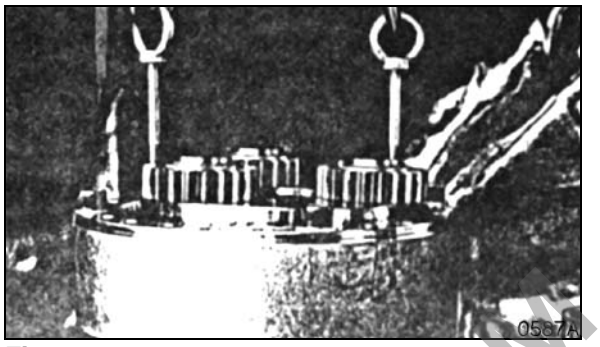

Figure 10

5. Begin disassembly of the No. 1 carrier by using a retaining ring pliers to remove the stop ring. Make reference marks showing assembly positions of the differential gears and pins, before disassembly. Use a permanent marking pen, removable paint, or another available marking tool that will not cause any surface damage. Remove the side plate (19), the No. 1 differential gears (7), the needle cage bearing (24) and the remaining side plate (18).

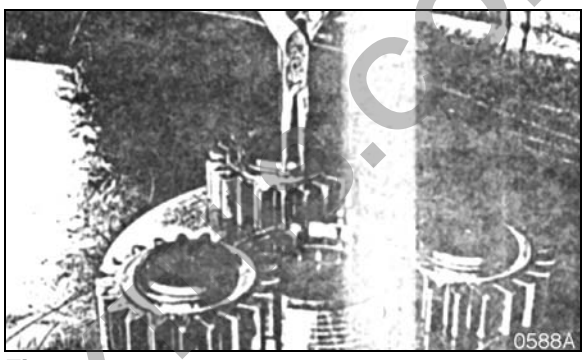

Figure 11

NOTE: *Use additional locating marks, for reassembly reference, on the side plates or other parts of the assembly. Do not disassemble the No. 1 pin, the No. 1 carrier (10) and the spring pin (31), unless there is evidence of abnormal damage or excessive wear.*

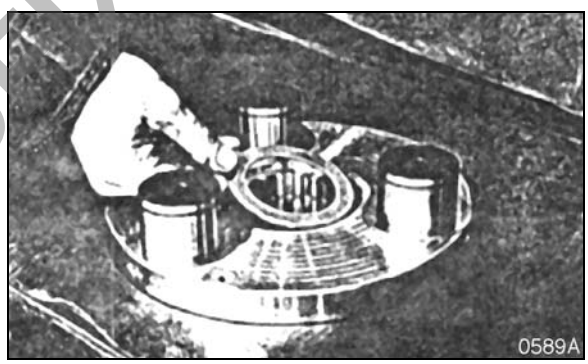

Figure 12

6. Remove the No. 1 sun gears.

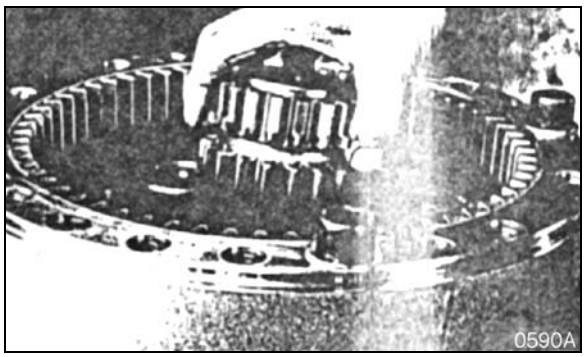

Figure 13

PREVIEW - YOUFIXTHIS.COM

Download full manual at youfixthis.com

DAEWOO
DAEWOO HEAVY INDUSTRIES & MACHINERY LTD.

AIR CONDITIONER

⚠ CAUTION!

Follow all safety recommendations and safe shop practices outlined in the front of this manual or those contained within this section.

Always use tools and equipment that is in good working order.

Use lifting and hoisting equipment capable of safely handling load.

Remember, that ultimately safety is your own personal responsibility.

MODEL	SERIAL NUMBER RANGE
Solar 140LC-V	1001 and Up
Solar 140W-V	1001 and Up
Solar 160W-V	1001 and Up
Solar 175LC-V	1001 and Up
Solar 180W-V	1001 and Up
Solar 210W-V	1001 and Up
Solar 225LC-V	1001 and Up
Solar 225NLC-V	1001 and Up
Solar 225LL	1001 and Up
Solar 255LC-V	1001 and Up
Solar 300LC-V	1001 and Up
Solar 300LL	1001 and Up
Solar 340LC-V	1001 and Up
Solar 420LC-V	1001 and Up
Solar 470LC-V	1001 and Up

PREVIEW - YOUFIXTHIS.COM

Copyright 2004 Daewoo

January 2004

Download full manual at youfixthis.com

HYDRAULIC SCHEMATIC

The hydraulic schematic(s) is available in the "Hydraulic and Electrical Schematic Shop Manual." This manual is a collection of diagrams and schematics for a number of models.

GENERAL NOTES

When referring to the schematic, refer to the following items:

- As shown in the schematic, the main pump assembly is driven by the engine. Mechanical energy is converted to hydraulic power, generating the required hydraulic flow which drives the system. Two main pumps (a right side pump and a left side pump) make up the main pump assembly.
- Hydraulic output from the right side pump is transmitted to the right side of the control valve. Output from the left side pump is transmitted to the valve spools on the left side of the control valve. Hydraulic output from the pilot pump is used to control the pump and to operate pilot and solenoid valves.
- The right half of the hydraulic control valve, supplied by the right pump in the pump assembly, operates valve spools for right travel, boom, bucket and arm functions. The amount of oil flow to the actuators at the output end of each of those circuits is regulated through the movement of each individual valve spool.
- The left half of the hydraulic control valve, fed by the left pump in the pump assembly, has control spools for left travel, swing, boom up and arm operation.
- Two-stage operation is a feature of boom, arm and bucket function. All three of these circuits can be operated using the output of only one half of the hydraulic pump assembly (one pump or the other), or – since both halves of the control valve have a spool and available circuit for these functions – the output of both pumps can be combined, allowing higher speed operation. Boom up, arm crowd and dumping functions can operate in any one of the three available power modes – the standard or general duty mode, the high speed/rapid cycling mode, or the low noise/high fuel efficiency mode.
- Whenever the right travel or left travel control spools are shifted, output from the main pump assembly flows through the center joint to one or both of the axial piston motors driving the side frame crawler tracks. A pilot valve connected to the swash plate of each travel motor changes motor capacity (and output) in direct proportion to the position of the travel switch selected by the operator.
- The hydraulic reservoir return line and the pilot circuit both have 10 micron full flow filters. The disposable elements in these two canister type filters trap and remove impurities from the oil in the system. An 80 mesh, 177 micron reservoir intake strainer also helps maintain system cleanliness and should be cleaned each time hydraulic fluid is drained and replaced. An oil cooler in the hydraulic system helps maintain the operating temperature of the system at approximately 50°C (122°F).
- The arm cylinder operating circuit includes antivacuum valves which protect the hydraulic system from vacuum that could result from external shocks or other unusual conditions. The arm cylinder circuit is also protected by overload relief valves. Whenever high-pressure is generated as a result of a shock or overload, excess pressure is dumped to the reservoir return circuit through the relief valve.
- A selection valve in the travel circuit can be used to provide constant high torque/low speed travel, or variable speed/variable torque output for travel. To prevent sliding during simultaneous travel and boom/arm/bucket operation, select the high torque/low speed travel position.

PREVIEW - YOUFIXTHIS.COM

Download full manual at youfixthis.com

SPECIAL TOOLS AND MATERIALS

PISTON NUT

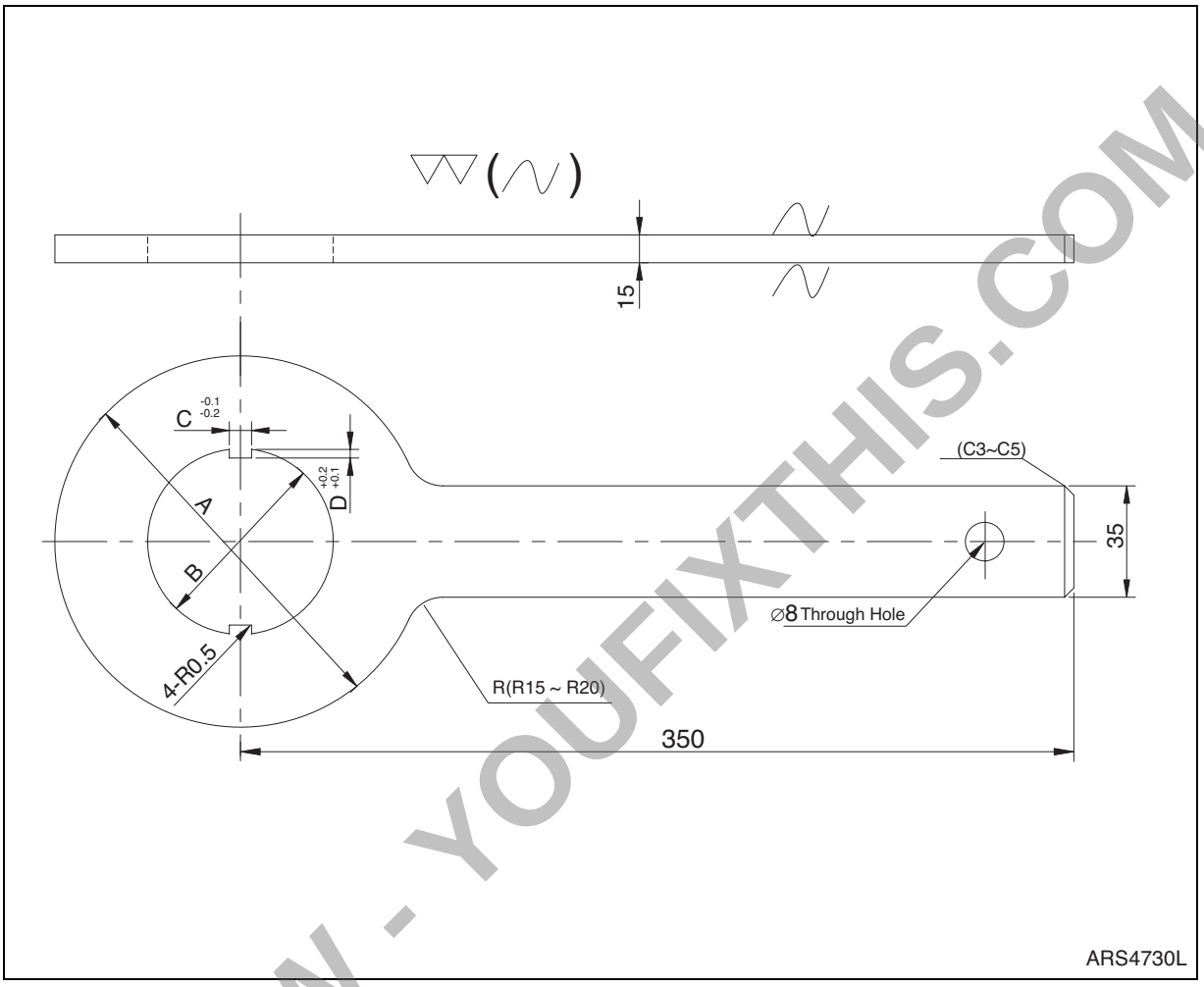

Figure 6

Material SM45C (AISI 1045)

Rockwell Harden from 22 - 27

Oil Quench

PREVIEW - YOUFIXTHIS.COM

Download full manual at youfixthis.com

Reference Number	Description
31	Brake Valve
51	Relief Valve
101	Drive Shaft
106	Spacer
111	Cylinder Block
113	Spherical Bushing
114	Cylinder Spring
116	Push Rod
117	Spacer (F)
118	Spacer (R)
121	Piston
122	Shoe
123	Retainer Plate
124	Shoe Plate
131	Valve Plate
301	Lower Casing
303	Upper Valve Casing
304	Front Cover
351	Plunger
355	Spring
401	Socket Head Cover Bolt
432	Stop Ring
433	Stop Ring

Reference Number	Description
437	Lock Ring
438	Lock Ring
443	Roller Bearing
444	Roller Bearing
451	Pin Spring
464	VP Plug
468	VP Plug
469	RO Plug
471	O-ring
472	O-ring
485	O-ring
487	O-ring
488	O-ring
491	Oil Seal
702	Brake Piston
706	O-ring
707	O-ring
712	Brake Spring
742	Friction Plate
743	Separator Plate
993	PT Plug
994	PT Plug

PREVIEW - YOUFIXTHIS.COM

Download full manual at youfixthis.com

Motor Internal Parts Disassembly

1. Position motor laterally.

   (Incline motor 90°.)

2. Drain oil in motor.

3. By holding cylinder block (104) with both hand, take out from spindle (2).

4. Remove companion plate (116) and friction plate (115) by two respectively that are attached around circumference of removed cylinder block (104).

5. Separate piston assembly. (piston (105), shoe (106)), collar (111), five needle type rollers (151) that are attached on removed cylinder block (104).

6. Take out swash plate (103) from the inside of spindle (2)

7. Take out shaft (102)

8. Take out two pivot (167) and two parallel pin (171).

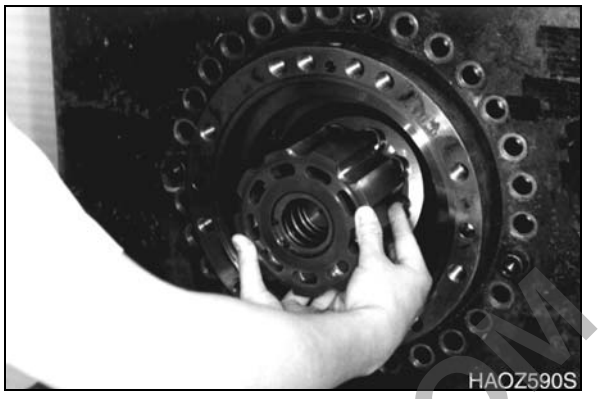

Figure 39

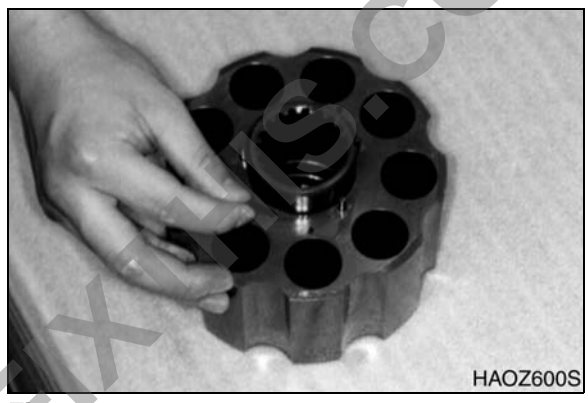

Figure 40

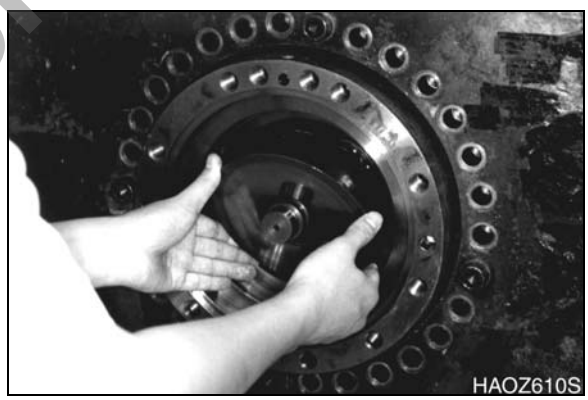

Figure 41

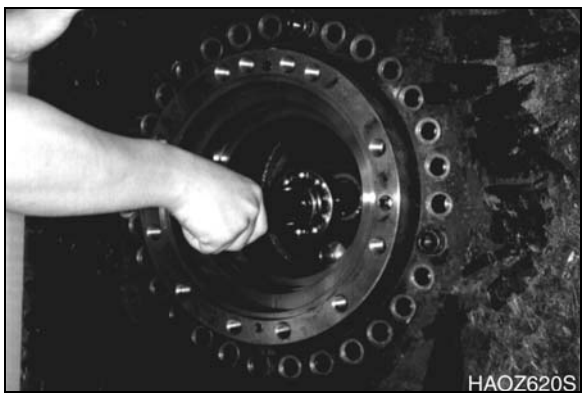

Figure 42

PREVIEW - YOUFIXTHIS.COM

Download full manual at youfixthis.com

13. Remove thrust bearing (11) from top of coupling shaft (12) if Torqmotor is a Series MB or ME. Inspect for wear, brinelling, corrosion and a full complement of retained rollers. See Figure 20.



Figure 20

14. Check exposed portion of coupling shaft (12) to be sure you have removed all signs of rust and corrosion which might prevent its withdrawal through the seal and bearing. Crocus cloth or fine crocus cloth may be used. See Figure 21. Remove any key (12A), nut (12B), washer (12C), bolt (12D), lock washer (12E), or retaining ring (12F).

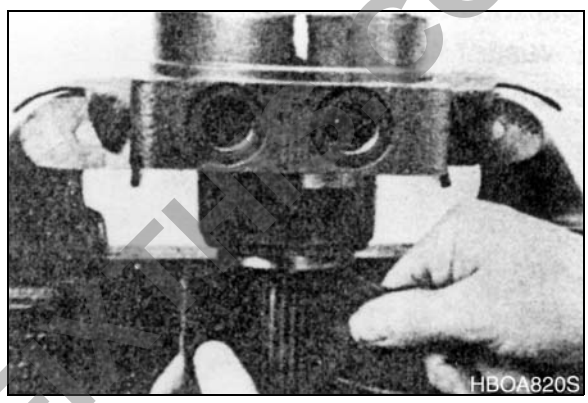

Figure 21

15. Remove coupling shaft (12), by pushing on the output end of shaft. See Figure 22. Inspect coupling shaft bearing and seal surfaces for spalling, nicks, grooves, severe wear or corrosion and discoloration. Inspect for damaged or worn internal and external splines or keyway. See Figure 23. Replace coupling shaft if any of these conditions exist.

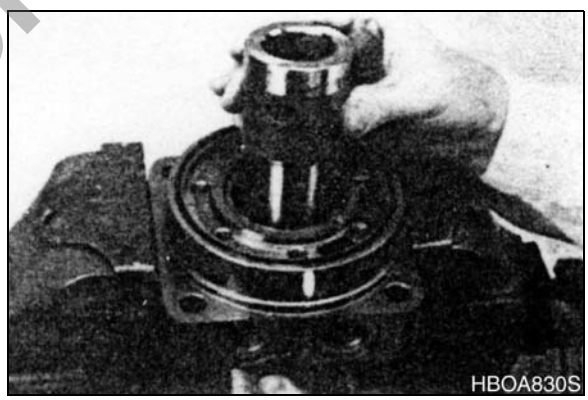

Figure 22

NOTE: *Minor shaft wear in seal area is permissible. If wear exceeds. 0.02 inches (0.51 mm) diametrically, replace coupling shaft.*

NOTE: *A slight "polish" is permissible in the shaft bearing areas. Anything more would require coupling shaft replacement.*

16. Remove and discard seal ring (4) from housing (18).

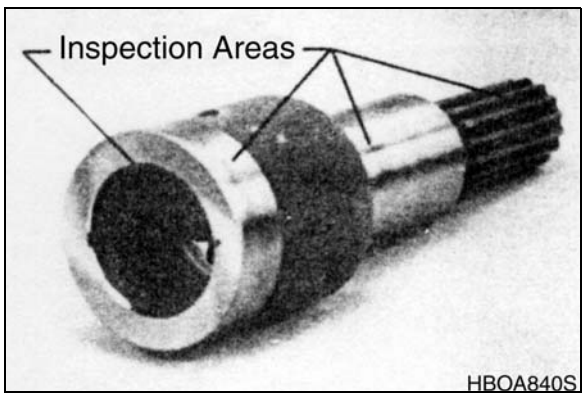

Figure 23

PREVIEW - YOUR FIX SOURCE

Download full manual at youfixthis.com

DISASSEMBLY

GENERAL DISASSEMBLY

This procedure assumes that the main pump assembly will be removed from the upper deck plate. Use the eyebolts in the center valve block assembly to move the valve block and the assembled pumps (still bolted together) to the prepared work area.

The area where the pumps are to be rebuilt should be well lighted, clean and protected from dust and/or wind gusts that could carry in dust or grit. Use a rubber mat or other protective covering on the workbench area to prevent damage or scratching of any precision machined components.

IMPORTANT

Clean all of the exterior surfaces of the pump before disassembly. There should not be any visible dirt, grease or other type of accumulation on the outside of the pump case. Clean off or blow dry all traces of cleaner and solvent before starting work.

Open the drain plugs to drain oil from the pump cases before disassembly.

IMPORTANT

If at all possible, use a clean, dry container to catch gear oil. A clean container allows an evaluation to be made of the used oil. The presence or relative lack of metal wear shavings in the used oil or obvious deterioration or contamination of the oil can provide a useful indicator of the pumps' general condition.

NOTE: *Used oil is an environmental contaminant and should be disposed of promptly at approved recycling facilities. Prolonged physical contact with used oil has been thought by some to pose a health risk. Clean oil residue from hands and clothing promptly, and do not allow used oil containers to accumulate.*

NOTE: *Main Pump component parts (numbered in parentheses) are keyed to Figure 14.*

NOTE: *Dispose of drained fluids according to local regulations.*

1. Loosen socket bolts (412, 413) to begin separation of regulator valves from two pumps.

   NOTE: *See "Pump Regulator Disassembly" on page 29 of this section for disassembly procedures.*

2. Unbolt gear pump (rear pilot pump) at rear of main pump assembly.

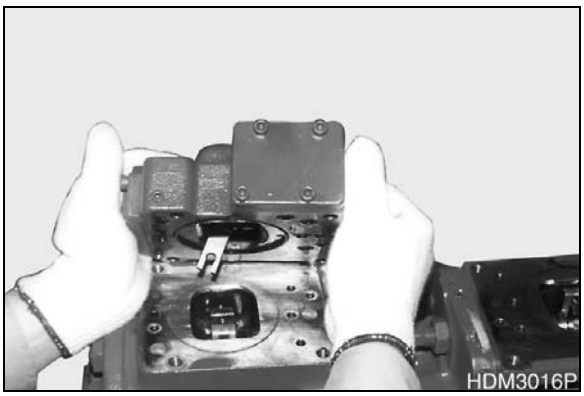

Figure 20

PREVIEW - YOUFIXTHIS.COM

Download full manual at youfixthis.com

Check Valve

Reference Number	Description
1	Cap
2	Backup Ring
3	O-ring
4	Spring
5	Nylon Chip
6	Check

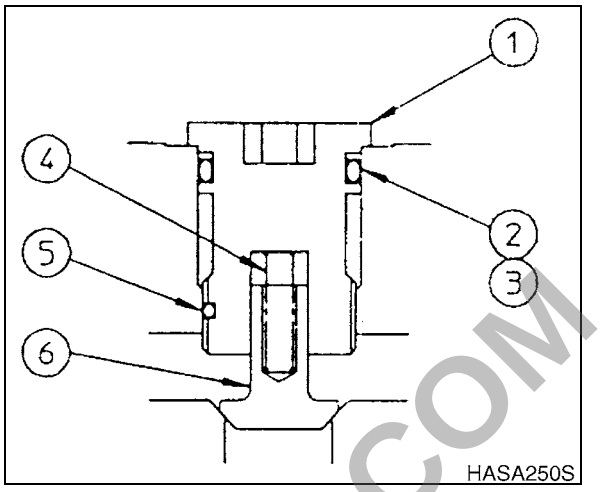

Figure 40

Cap

Reference Number	Description
1	Cap
2	Backup Ring
3	O-ring
4	Nylon Chip

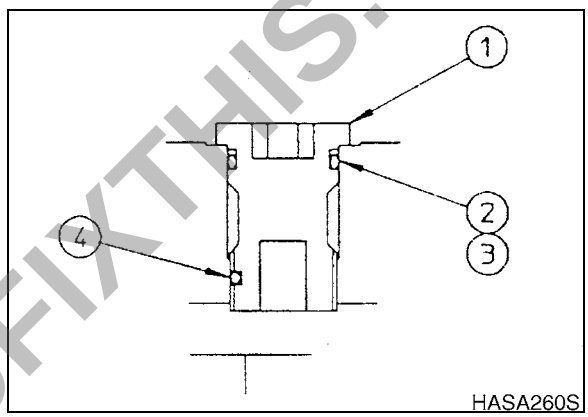

Figure 41

Check Valve [TI]

Reference Number	Description
1	Cap
2	O-ring
3	Cap
4	Spacer
5	Backup Ring
6	O-ring
7	Spring
8	Check
9	Nylon Chip

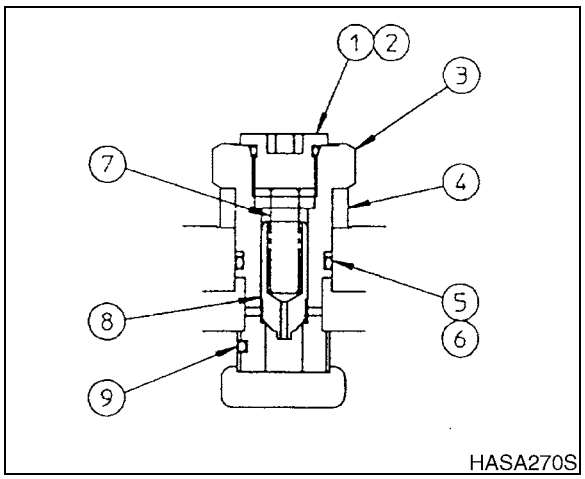

Figure 42

PREVIEW - YOUFIXTHIS.COM

Download full manual at youfixthis.com

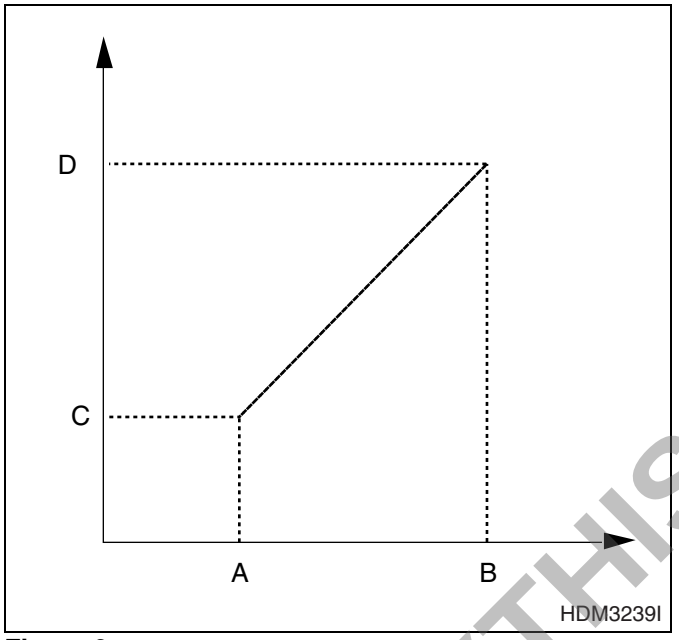

Figure 2

A	1.10 mm (0.04 in)
B	6.50 mm (0.26 in)
C	5 ±1 bar (72 ±14 psi)
D	28 ±1.5 bar (406 ±21 psi)

HYDRAULIC SPECIFICATIONS

Implement Control Valve	Type:	Pilot Control
	Pressure/Stroke:	28 kg/cm^2 (398 psi) @ 6.5 mm (0.256") stroke
	Weight:	4.8 kg (10.6 lb)

PREVIEW - YOUFIXTHIS.COM

Download full manual at youfixthis.com

PREVIEW - YOUFIXTHIS.COM

Download full manual at youfixthis.com

Reference Number	Description
1	Instrument Panel
2	Engine Control Motor
3	Engine
4	Main Hydraulic Pump
5	Control Pump
6	Control Valve
7	Pressure Switch
8	Pump Pressure Sensor
9	Engine Speed Sensor
10	Electromagnetic Proportional Pressure Reducing Valve (E.P.P.R. Valve)

Reference Number	Description
11	Solenoid Valve (Pressure Up)
12	Solenoid Valve (Swing Priority)
13	Solenoid Valve (High Speed)
14	Travel Motor
15	Engine Throttle Control
16	Engine Control Dial
17	e-EPOS Controller
18	Auto Travel Selector Switch
19	Boost Switch (Right Work Lever)

PREVIEW - YOUFIXTHIS.COM

Download full manual at youfixthis.com

PREVIEW ONLY

You're viewing 25 of 688 pages

The full manual includes:

- All 688 pages, complete
- Searchable PDF (find any keyword)
- No watermarks
- Instant download
- Print-ready quality

GET FULL MANUAL NOW

Daewoo Solar 225LL, Solar 300LL Shop Manual

Scan or click anywhere
youfixthis.com

Click anywhere on this page to get the full manual