GENERAL SPECIFICATIONS

Shipping Weight	20.4 metric tons (45,000 lb), includes 10% fuel, boom, 2,400 mm (7’ 10") arm, standard bucket and standard shoes
Operating Weight	Add weight of full fuel tank and operator.
Shipping Weights With Optional Track Shoes	Add 300 kg (660 lb) for 600 mm (24") shoes
Major Component Weights	Standard Boom 1,450 kg (3,197 lb)
	2,000 mm (6’ 7") Arm 620 kg (1,367 lb)
	2,400 mm (7’ 10") Arm 680 kg (1,499 lb)
	Boom Cylinders 171 kg (377 lb) each
	Arm Cylinder 260 kg (573 lb)
	Bucket Cylinder 144 kg (317 lb)
	Counterweight 3,900 kg (8,598 lb)
	Upper Turntable 5,350 kg (11,795 lb)
	Lower - below Swing Bearing 7,350 kg (16,204 lb)
Digging Forces:	
Bucket Cylinder	128 KN or 13,100 kg (28,880 lb) - (with 2,400 mm [7’ 10"] arm)
	128 KN or 13,100 kg (28,880 lb) - (with 2,000 mm [6’ 7"] arm)
Arm Cylinder	112 KN or 11,400 kg (25,133 lb) - (with 2,400 mm [7’ 10"] arm)
	139 KN or 14,200 kg (31,306 lb) - (with 2,000 mm [6’ 7"] arm)
Fuel Tank Capacity	320 liters (84.5 U.S. gal)
Hydraulic System Capacity	240 liters (63.4 U.S. gal)
Hydraulic Reservoir Capacity	160 liters (42 U.S. gal)
Bucket Heaped Capacity Range	PCSA 0.50 - 1.18 m^3 (0.65 - 1.54 yd^3)
	IMPORTANT: Refer to the Load Weight, Bucket and Arm Length Compatibility Table for information on which bucket sizes may be used safely with which arm length, for load material weights.
Shoe Type	Triple Grouser
Shoe Width and Optional Sizes	500 mm (20") - standard 600 mm (23.5") - optional
Ground Pressure Ratings:	
Standard 500 mm (20") shoe -	0.52 kg/cm^2 (7.4 psi)
Optional 600 mm (23.6") shoe -	0.44 kg/cm^2 (6.3 psi)
Transport Dimensions	
Overall Shipping Length (standard boom and arm)	9,030 mm (29’ 7")
Overall Shipping Width (standard shoes)	2,490 mm (8’ 2")
Overall Shipping Height (to top of cylinder hose)	3,280 mm (10’ 9")
Track Shipping Length	4,440 mm (14’ 7")
Transport Trailer Capacity	30 tons (33 short tons), minimum load capacity

PREVIEW - YOUFIXTHIS.COM

Download full manual at youfixthis.com

GENERAL DESCRIPTION

Schematic(s) presented in this section are laid out on facing pages.

An overlapping edge has been taken into consideration so that a photocopy can be made and pasted together to make a complete schematic.

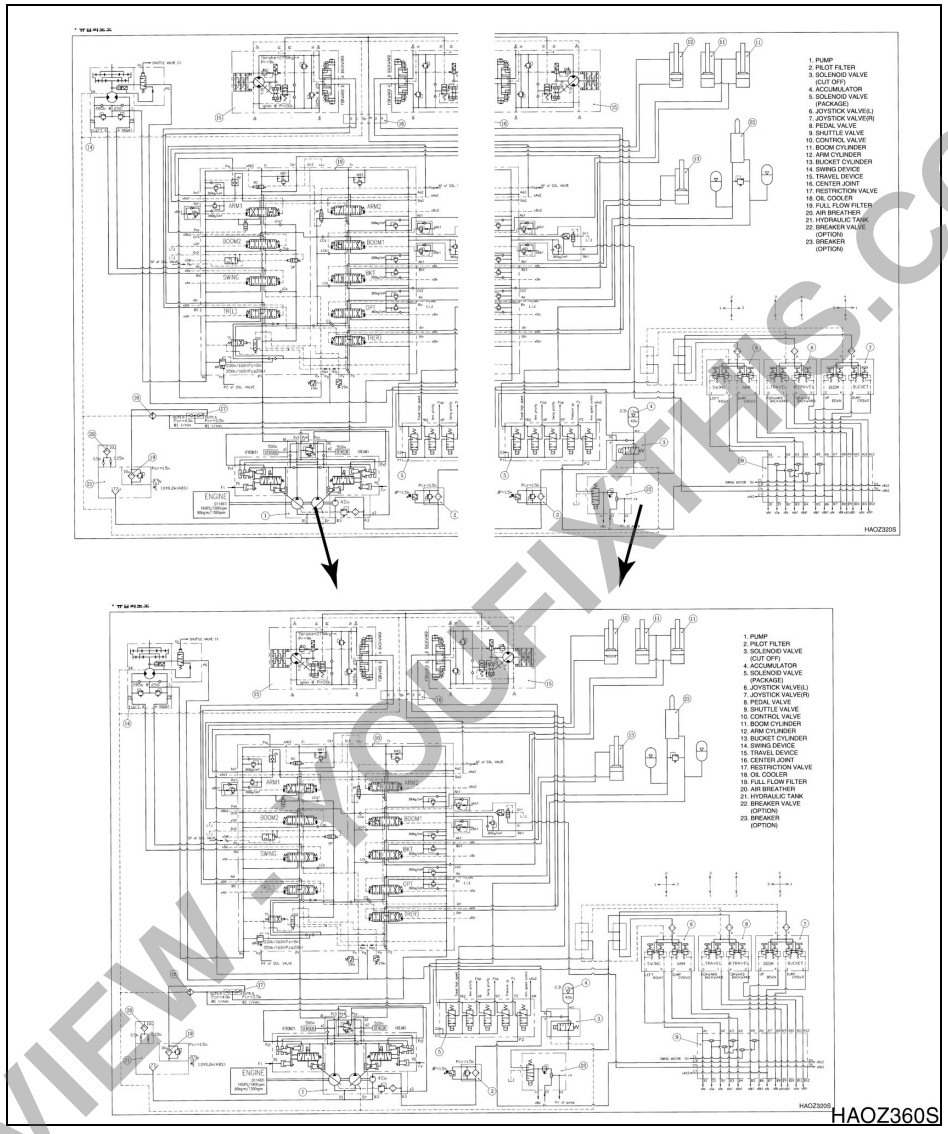

Figure 1

PREVIEW - YOUFIXTHIS.COM

Download full manual at youfixthis.com

GENERAL DESCRIPTION

Schematic(s) presented in this section are laid out on facing pages.

An overlapping edge has been taken into consideration so that a photocopy can be made and pasted together to make a complete schematic.

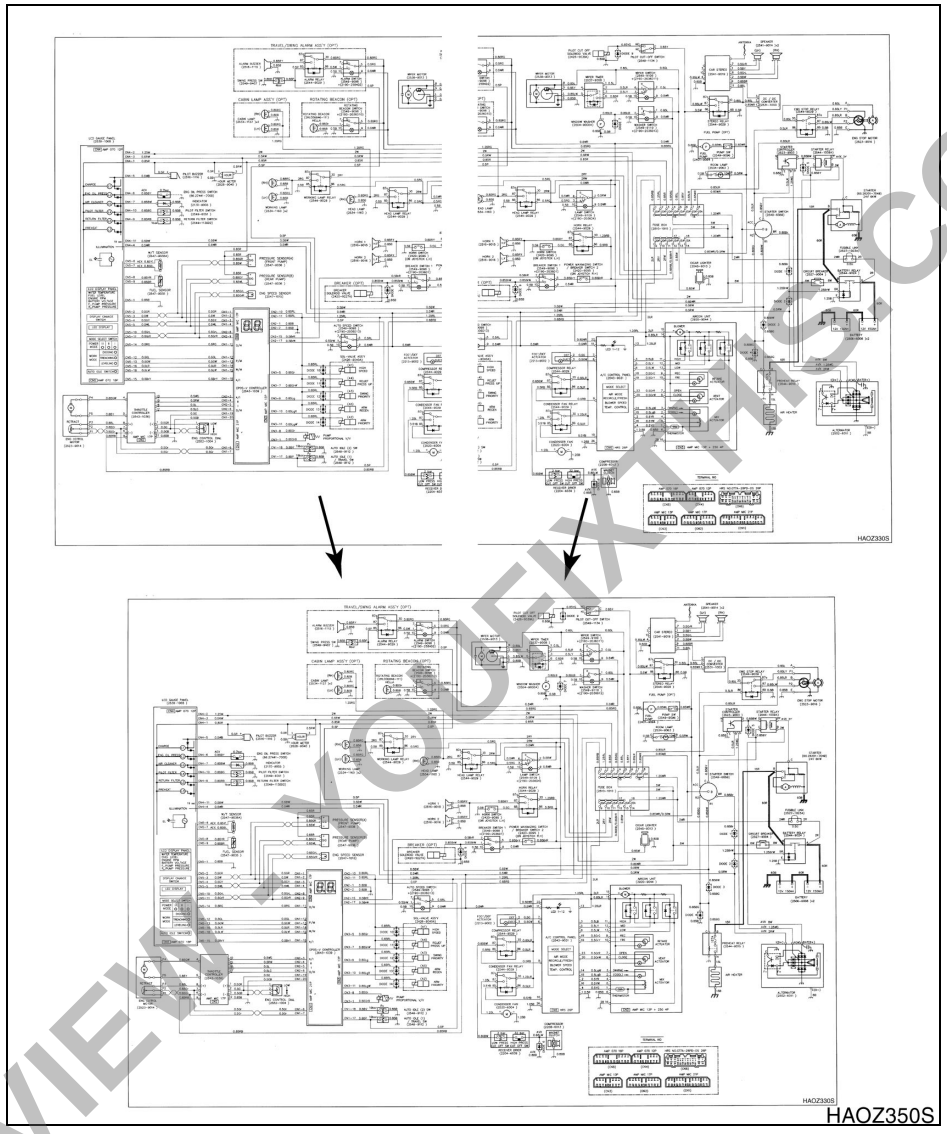

Figure 1

PREVIEW - YOUFIXTHIS.COM

Download full manual at youfixthis.com

REMOVAL

⚠ CAUTION!

Avoid disassembling cab if there are strong wind gusts, which could catch large surface area of cab shell and push it sideways during lift.

1. Park on firm and level ground.
2. Lower the front attachment (bucket) to the ground.
3. Shut down the engine.
4. Set safety lever on "RELEASED" position.
5. Turn starter switch "ON."

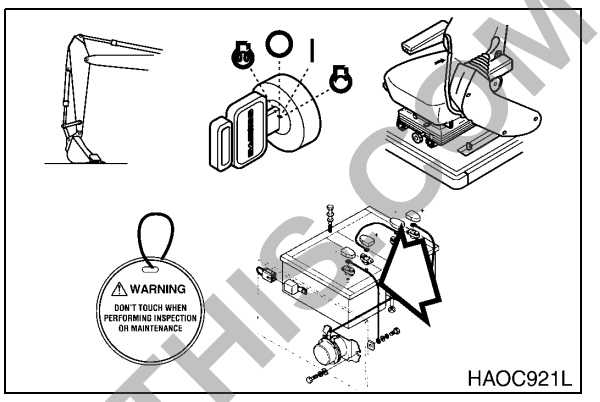

Figure 1

⚠ WARNING!

If engine must be running while performing maintenance, always use extreme caution. Always have one person in the cab at all times. Never leave the cab with engine running.

6. Fully stroke the work levers (joysticks) in all directions to relieve any pressure from the accumulators.
7. Set safety lever to the "LOCK" position.
8. Turn key to the "OFF" position and remove from starter switch.
9. Hang a maintenance warning tag on the controls.
10. Disconnect the battery cable from the negative (-) battery terminal.
11. Prepare cab shell for removal by disconnecting wiring connectors for:
    A. Cab interior lighting.
    B. External light wiring.
    C. Radio antenna and connections.
    D. Wiper/washer connections.

NOTE: *Control console wiring harnesses and hydraulic piping lines that pass through the floor of the cab do not need to be disassembled.*

NOTE: *If unit is equipped with a cab protective structure (for forestry, or hazardous working conditions), it must be removed.*

PREVIEW - YOUFIXTHIS.COM

Download full manual at youfixthis.com

TROUBLESHOOTING – SWING GEARBOX

Problem	Possible Causes	Remedies
Swing motor fails to operate and:		
Three pressure tests at motor, brake or makeup valve show low reading(s).	Swing relief valve defective Brake release valve defective Motor makeup valve defective.	Adjust pressure to recommended range in affected valve. OR Disassemble and clean valve assembly. Replace all valve components that show damage.
All three pressure checks are OK but left travel also fails to run.	Exchange front and rear pump inlet and outlet hoses to test pump function.	If swing and left travel are restored but right travel stops working, replace or repair P1 pump.
All three pressure tests are OK, but machine fails to swing at all.	Brake assembly or motor friction plate failing to release.	Check for binding. Disassemble and repair.
	Pilot (control) pressure low or swing control valve stuck.	Disassemble / Repair pilot pressure swing spool (305) and / or swing control valve.
	Swing motor defective.	Test motor drain rate. Replace / Repair motor.
	Gear train defective.	Refer to “Swing Gear Troubleshooting” procedure.
Swing functions but only at reduced rpm.	Causes listed above could also produce dragging swing, OR hot or wrong oil OR worn-out parts.	Check above list; then replace oil, test motor drain rate and check for “03” reading (e-EPOS self-test).
Left travel speed is also reduced.	Low output at P1 pump or external pilot piping leaks/is clogged.	Clean and repair piping or repair or replace pump P1.
Swing control movement is reversed.	Inlet / outlet piping reversed.	Reset controls or reverse piping.
Machine swings but continues coasting on past stopping point.	Swing control valve spool not centered.	Replace return spring; clean/ repair valve piston and spool.
	Pilot pressure may be outside range.	Disassemble, clean or replace pilot relief valve or pilot valve.
	Swing relief valve may be faulty.	Repair/Replace swing relief valve.
Swing movement is in one direction only.	Check to see that pilot pressure is the same right and left.	If pilot pressure is unequal, clean or repair piping or repair/ replace valve.
	Swing control valve spool may be stuck.	Repair/Replace the swing control valve.
	Swing relief valve may be faulty.	Repair/Replace the swing relief valve.

PREVIEW - YOUFIXTHIS.COM

Download full manual at youfixthis.com

TORQUE VALUES FOR STANDARD METRIC FASTENERS

NOTE: *The units for the torque values are kg•m (ft lb).*

Dia. x Pitch (mm)	Grade										
	3.6 (4A)	4.6 (4D)	4.8 (4S)	5.6 (5D)	5.8 (5S)	6.6 (6D)	6.8 (6S)	6.9 (6G)	8.8 (8G)	10.9 (10K)	12.9 (12K)
M5 x Std.	0.15 (1.08)	0.16 (1.15)	0.25 (1.80)	0.22 (1.59)	0.31 (2.24)	0.28 (2.02)	0.43 (3.11)	0.48 (3.47)	0.50 (3.61)	0.75 (5.42)	0.90 (6.50)
M6 x Std.	0.28 (2.02)	0.30 (2.16)	0.45 (3.25)	0.40 (2.89)	0.55 (3.97)	0.47 (3.39)	0.77 (5.56)	0.85 (6.14)	0.90 (6.50)	1.25 (9.04)	1.50 (10.84)
M7 x Std.	0.43 (3.11)	0.46 (3.32)	0.70 (5.06)	0.63 (4.55)	0.83 (6.00)	0.78 (5.64)	1.20 (8.67)	1.30 (9.40)	1.40 (10.12)	1.95 (14.10)	2.35 (16.99)
M8 x Std.	0.70 (5.06)	0.75 (5.42)	1.10 (7.95)	1.00 (7.23)	1.40 (10.12)	1.25 (9.04)	1.90 (13.74)	2.10 (15.18)	2.20 (15.91)	3.10 (22.42)	3.80 (27.48)
M8 x 1	0.73 (5.28)	0.80 (5.78)	1.20 (8.67)	1.00 (7.23)	1.50 (10.84)	1.35 (9.76)	2.10 (15.18)	2.30 (16.63)	2.40 (17.35)	3.35 (24.23)	4.10 (29.65)
M10 x Std.	1.35 (9.76)	1.40 (10.12)	2.20 (15.91)	1.90 (13.74)	2.70 (19.52)	2.35 (19.99)	3.70 (26.76)	4.20 (30.37)	4.40 (31.18)	6.20 (44.84)	7.20 (52.07)
M10 x 1	1.50 (10.84)	1.60 (11.57)	2.50 (18.08)	2.10 (15.18)	3.10 (22.42)	2.80 (20.25)	4.30 (31.10)	4.90 (35.44)	5.00 (36.16)	7.00 (50.63)	8.40 (60.75)
M12 x Std.	2.40 (17.35)	2.50 (18.08)	3.70 (26.76)	3.30 (23.86)	4.70 (33.99)	4.20 (30.37)	6.30 (45.56)	7.20 (52.07)	7.50 (54.24)	10.50 (75.94)	12.50 (90.41)
M12 x 1.5	2.55 (18.44)	2.70 (19.52)	4.00 (28.93)	3.50 (25.31)	5.00 (36.16)	4.50 (32.54)	6.80 (49.18)	7.70 (55.69)	8.00 (57.86)	11.20 (81.00)	13.40 (96.92)
M14 x Std.	3.70 (26.76)	3.90 (28.20)	6.00 (13.23)	5.20 (37.61)	7.50 (54.24)	7.00 (50.63)	10.00 (72.33)	11.50 (83.17)	12.00 (86.79)	17.00 (122.96)	20.00 (144.66)
M14 x 1.5	4.10 (29.65)	4.30 (31.10)	6.60 (47.73)	5.70 (41.22)	8.30 (60.03)	7.50 (54.24)	11.10 (80.28)	12.50 (90.41)	13.00 (94.02)	18.50 (11.26)	22.00 (158.12)
M16 x Std.	5.60 (40.50)	6.00 (43.39)	9.00 (65.09)	8.00 (57.86)	11.50 (83.17)	10.50 (75.94)	15.50 (112.11)	17.90 (129.47)	18.50 (133.81)	26.00 (188.05)	31.00 (224.22)
M16 x 1.5	6.20 (44.84)	6.50 (47.01)	9.70 (70.16)	8.60 (62.20)	12.50 (90.41)	11.30 (81.73)	17.00 (122.96)	19.50 (141.04)	20.00 (144.66)	28.00 (202.52)	35.50 (256.77)
M18 x Std.	7.80 (56.41)	8.30 (60.03)	12.50 (90.41)	11.00 (79.56)	16.00 (115.72)	14.50 (104.87)	21.00 (151.89)	27.50 (198.90)	28.50 (206.14)	41.00 (296.55)	43.00 (311.01)
M18 x 1.5	9.10 (65.82)	9.50 (68.71)	14.40 (104.15)	12.50 (90.41)	18.50 (133.81)	16.70 (120.79)	24.50 (177.20)	27.50 (198.90)	28.50 (206.14)	41.00 (296.55)	49.00 (354.41)
M20 x Std.	11.50 (83.17)	12.00 (86.79)	18.00 (130.19)	16.00 (115.72)	22.00 (159.12)	19.00 (137.42)	31.50 (227.83)	35.00 (253.15)	36.00 (260.38)	51.00 (368.88)	60.00 (433.98)
M20 x 1.5	12.80 (92.58)	13.50 (97.64)	20.50 (148.27)	18.00 (130.19)	25.00 (180.82)	22.50 (162.74)	35.00 (253.15)	39.50 (285.70)	41.00 (296.55)	58.00 (419.51)	68.00 (491.84)
M22 x Std.	15.50 (112.11)	16.00 (115.72)	24.50 (177.20)	21.00 (151.89)	30.00 (216.99)	26.00 (188.05)	42.00 (303.78)	46.00 (332.71)	49.00 (354.41)	67.00 (484.61)	75.00 (542.47)
M22 x 1.5	17.00 (122.96)	18.50 (133.81)	28.00 (202.52)	24.00 (173.59)	34.00 (245.92)	29.00 (209.75)	47.00 (339.95)	52.00 (44.76)	56.00 (405.04)	75.00 (542.47)	85.00 (614.80)
M24 x Std.	20.50 (148.27)	21.50 (155.50)	33.00 (238.68)	27.00 (195.29)	40.00 (289.32)	34.00 (245.92)	55.00 (397.81)	58.00 (419.51)	63.00 (455.67)	82.00 (593.10)	92.00 (655.43)
M24 x 1.5	23.00 (166.35)	35.00 (253.15)	37.00 (267.62)	31.00 (224.22)	45.00 (325.48)	38.00 (202.52)	61.00 (441.21)	67.00 (484.61)	74.00 (535.24)	93.00 (672.66)	103.00 (744.99)

PREVIEW - YOUFIXTHIS.COM

Download full manual at youfixthis.com

TABLE OF CONTENTS

Safety

Track Excavator Safety.....S0102000

Specifications

Specifications for Solar 225NLC-V S0205016K

General Maintenance

General Maintenance Procedures.....S0302000

Standard Torques.....S0309000

Upper Structure

Cab S0402040K

Counterweight..... S0403050K

Fuel Tank..... S0405006K

Fuel Transfer Pump.....S0405500

Swing Bearing.....S0407000

Swing Reduction Gearbox..... S0408015K

Lower Structure and Chassis

Track Assembly S0505030

Engine and Drive Train

Air-Conditioner..... S0605060K

Drive Coupling (Main Pump).....S0609000

Hydraulics

Hydraulic System Troubleshooting, Testing and Adjustment S0702170K

Accumulator..... S0703010K

Center Joint (Swivel).....S0704010

Cylinders.....S0705000

PREVIEW - YOUFIXTHIS.COM

Download full manual at youfixthis.com

DAEWOO
DAEWOO HEAVY INDUSTRIES & MACHINERY LTD.

TRACK EXCAVATOR SAFETY

⚠ CAUTION!

Follow all safety recommendations and safe shop practices outlined in the front of this manual or those contained within this section.

Always use tools and equipment that is in good working order.

Use lifting and hoisting equipment capable of safely handling load.

Remember, that ultimately safety is your own personal responsibility.

MODEL	SERIAL NUMBER RANGE
Solar 130LC-V	0001 and Up
Solar 170LC-V	1001 and Up
Solar 175LC-V	1001 and Up
Solar 220LC-V	0001 and Up
Solar 220N-V	1001 and Up
Solar 225LC-V	1001 and Up
Solar 225NLC-V	1001 and Up
Solar 250LC-V	1001 and Up
Solar 255LC-V	1001 and Up
Solar 290LC-V	0001 and Up
Solar 300LC-V	1001 and Up
Solar 300LL	1001 and Up
Solar 330LC-V	1001 and Up
Solar 340LC-V	1001 and Up
Solar 400LC-V	1001 and Up
Solar 420LC-V	1001 and Up
Solar 450LC-V	1001 and Up
Solar 470LC-V	1001 and Up

PREVIEW - YOUFIXTHIS.COM

Copyright 2002 Daewoo

November 2002

Download full manual at youfixthis.com

PREVIEW - YOUFIXTHIS.COM

Download full manual at youfixthis.com

BOOST STARTING OR CHARGING ENGINE BATTERIES

If any mistake is made in the method of connecting the booster cables, it may cause an explosion or fire. Always do the following;

- Turn off all electrical equipment before connecting leads to the battery. This includes electrical switches on the battery charger or boost starting equipment.
- When boost-starting from another machine or vehicle do not allow the two machines to touch. Wear safety glasses or goggles while required battery connections are made.

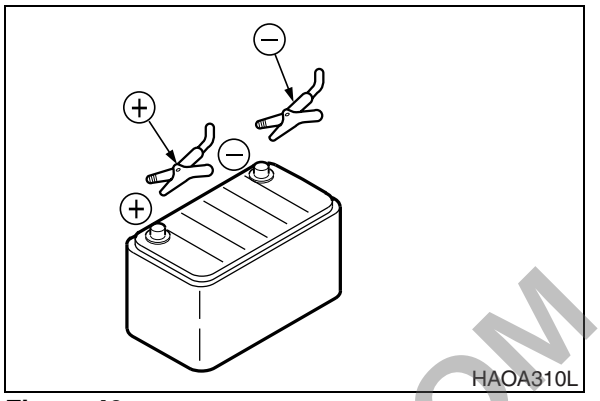

Figure 40

- 24 volt battery units consisting of two series-connected twelve volt batteries have a cable connecting one positive terminal on one of the 12 volt batteries to a negative terminal on the other battery. Booster or charger cable connections must be made between the nonseries connected positive terminals and between the negative terminal of the booster battery and the metal frame of the machine being boosted or charged. Refer to the procedure and illustration in “Starting Engine With a Booster Cable” in the Operation and Maintenance Manual.
- Connect positive cable first when installing cables and disconnect the negative cable first when removing them. The final cable connection, at the metal frame of the machine being charged or boost-started, should be as far away from the batteries as possible.

PREVIEW - YOUFIXTHIS.COM

Download full manual at youfixthis.com

Fatigue Spalling

Flaking of surface metal resulting from fatigue.

Replace bearing - clean all related parts.

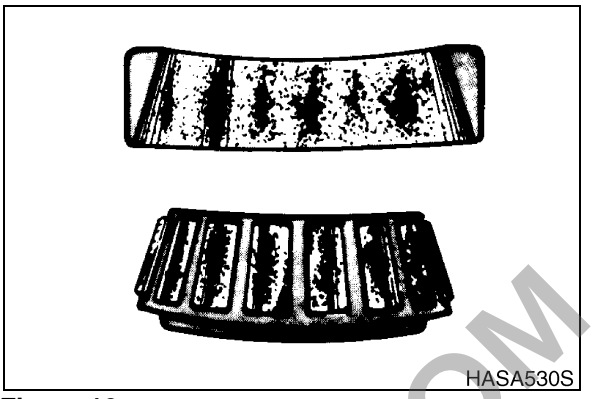

Figure 10

Brinelling

Surface indentations in raceway caused by rollers either under impact loading or vibration while the bearing is not rotating.

Replace bearing if rough or noisy.

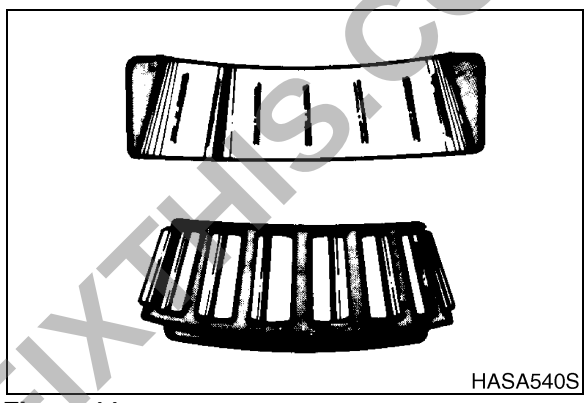

Figure 11

Cage Wear

Wear around outside diameter of cage and roller pockets caused by abrasive material and inefficient lubrication.

Replace bearings - check seals.

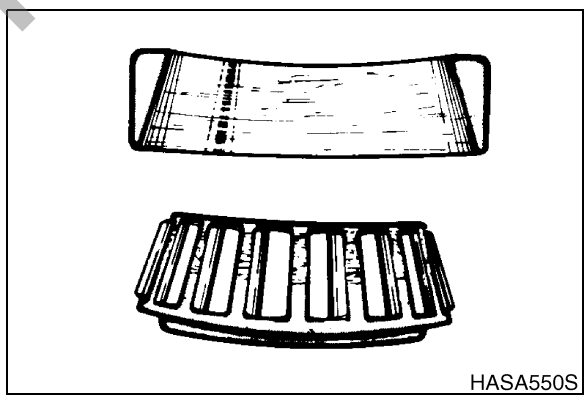

Figure 12

Abrasive Roller Wear

Pattern on races and rollers caused by fine abrasives.

Clean all parts and housings, check seals and bearings and replace if leaking, rough or noisy.

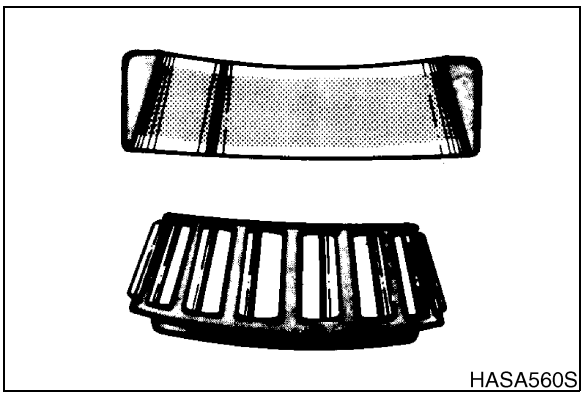

Figure 13

PREVIEW - YOUFIXTHIS.COM

Download full manual at youfixthis.com

3. Lower front attachment (bucket) to the ground.
4. Stop the engine.
5. Set safety lever on "RELEASED" position.
6. Turn starter switch "ON."

> **WARNING!**
>
> **If engine must be run while performing maintenance, use extreme care. Always have one person in the cab at all times. Never leave the cab with the engine running.**

7. Fully stroke work levers (joysticks) in all directions to relieve pressure from accumulators.
8. Set safety lever on "LOCK" position.
9. Turn key to "OFF" position and remove from starter switch.
10. Hang maintenance warning tag on controls.
11. Disconnect negative (-) battery cable leading to frame from battery.
12. Clean area around fuel tank fill cap (1, Figure 5). Open fuel cap.

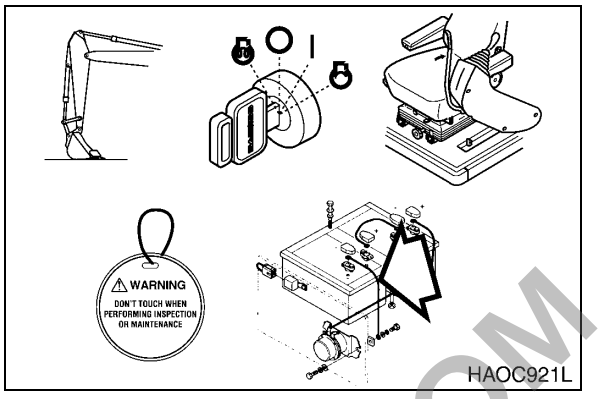

Figure 4

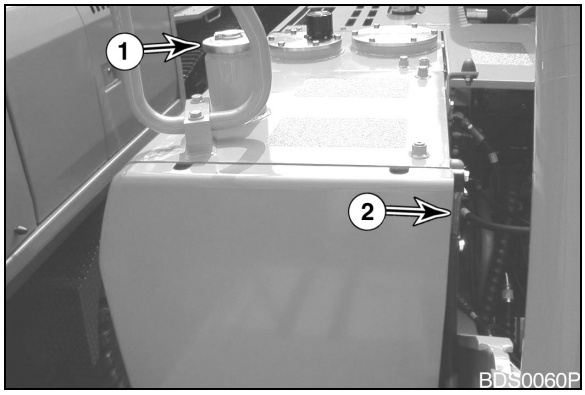

Figure 5

PREVIEW - YOUFIXTHIS.COM

Download full manual at youfixthis.com

34. Apply an even, thin, continuous bead of Silicone flexible sealant to the contact surfaces of the swing motor and the ring gear. A noncorrosive type silicone, formulated for increased oil resistance, is recommended.

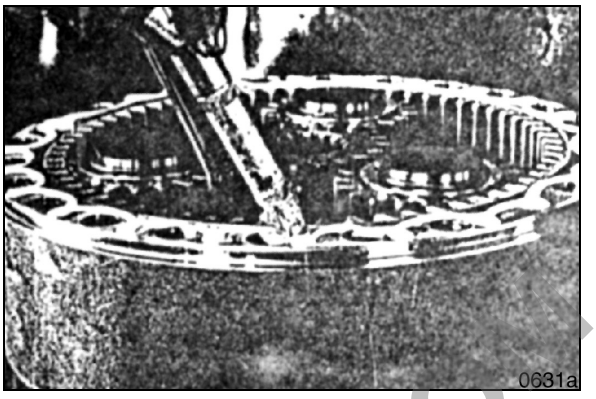

Figure 55

35. Install the stop ring on the drive shaft of the swing motor. Verify alignment of spline grooves before assembling the motor and gearbox. Tighten assembly bolts to the specified torque value using an even, staggered sequence.



Figure 56

36. Use teflon tape or some other, similar thread sealant, on the gearbox drain plug, prior to installation. Fill the gearbox with 6 liters (6.3 quarts) of gear oil.

PREVIEW - YOUFIXTHIS.COM

Download full manual at youfixthis.com

TEMPERATURE LEVEL CONTROL AND DISPLAY

Step	LED 1	LED 2	LED 3	LED 4	LED 5	LED 6	LED 7	Position Sensor Voltage	Remark
0	Green	Green	Green	Green	Green	Green	Green	4.50 V ±0.2	MAX. COOL
1	Green	Green	Green	Green	Green	Green	Green	4.33 V ±0.2	
2	Green	Green	Green	Green	Green	Green	Green	4.15 V ±0.2	
3	Red	Green	Green	Green	Green	Green	Green	3.98 V ±0.2	
4	Red	Green	Green	Green	Green	Green	Green	3.80 V ±0.2	
5	Red	Green	Green	Green	Green	Green	Green	3.63 V ±0.2	
6	Red	Red	Green	Green	Green	Green	Green	3.46 V ±0.2	
7	Red	Red	Green	Green	Green	Green	Green	3.28 V ±0.2	
8	Red	Red	Green	Green	Green	Green	Green	3.11 V ±0.2	
9	Red	Red	Red	Green	Green	Green	Green	2.93 V ±0.2	
10	Red	Red	Red	Green	Green	Green	Green	2.76 V ±0.2	
11	Red	Red	Red	Green	Green	Green	Green	2.59 V ±0.2	
12	Red	Red	Red	Red	Green	Green	Green	2.41 V ±0.2	
13	Red	Red	Red	Red	Green	Green	Green	2.24 V ±0.2	
14	Red	Red	Red	Red	Green	Green	Green	2.07 V ±0.2	
15	Red	Red	Red	Red	Red	Green	Green	1.89 V ±0.2	
16	Red	Red	Red	Red	Red	Green	Green	1.72 V ±0.2	
17	Red	Red	Red	Red	Red	Green	Green	1.54 V ±0.2	
18	Red	Red	Red	Red	Red	Red	Green	1.37 V ±0.2	
19	Red	Red	Red	Red	Red	Red	Green	1.20 V ±0.2	
20	Red	Red	Red	Red	Red	Red	Green	1.02 V ±0.2	
21	Red	Red	Red	Red	Red	Red	Red	0.85 V ±0.2	
22	Red	Red	Red	Red	Red	Red	Red	0.67 V ±0.2	
23	Red	Red	Red	Red	Red	Red	Red	0.50 V ±0.2	MAX. HOT

PREVIEW - YOUFIXTHIS.COM

Download full manual at youfixthis.com

OPERATION OF WORKING COMPONENTS

BOOM OPERATING CIRCUIT

The boom operating circuit includes the right and left main hydraulic pumps (both halves of the main pump assembly), both sides of the control valve and the boom cylinder. The circuit operates in boom down mode through the first shift position and through the second shift position in boom up mode. Overload relief valves set at 360 kg/cm^2 (5,112 psi) protect the hydraulic system from damage as a result of overloads or shocks to the boom.

BOOM UP CIRCUIT

When you pull the boom control lever backward, the right side pilot valve generates secondary boom up pilot pressure that is transmitted to the BOOM1 and BOOM2 spools of the control valve simultaneously. When secondary pilot pressure reaches 7 - 9 kg/cm^2 (100 - 130 psi), boom control valve spools open and oil from both pumps goes to the boom cylinder.

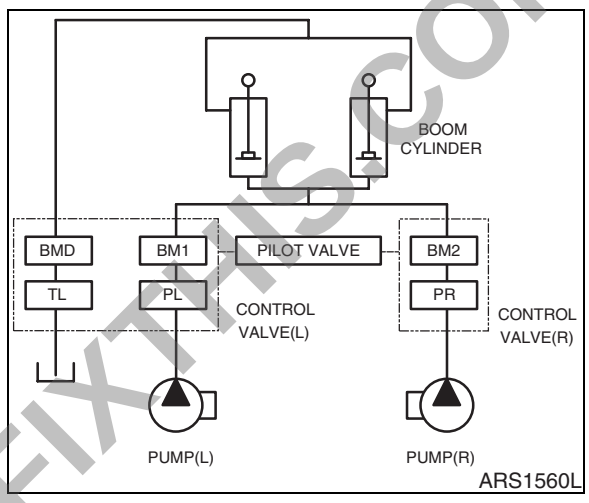

Figure 2

BOOM DOWN CIRCUIT

When the boom control lever is pushed forward, the right side pilot valve generates secondary boom down pilot pressure that is transmitted only to the BOOM1 spool of the control valve. When secondary pilot pressure reaches 7 - 9 kg/cm^2 (100 - 130 psi), the BOOM1 spool on the left side of the control valve opens so that oil from only one pump (PUMP (L)) assembly goes to the boom cylinder for boom lowering.

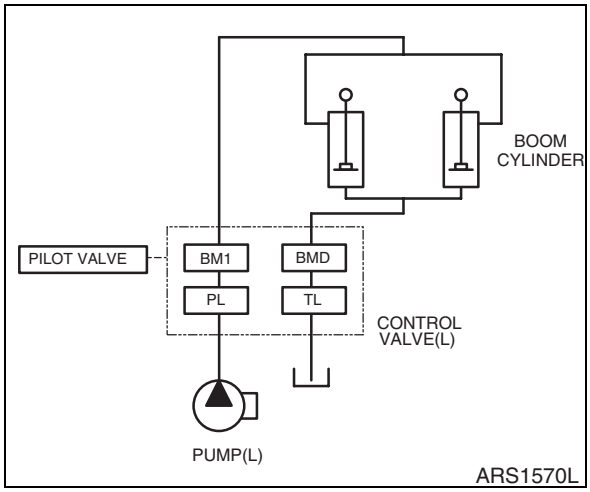

Figure 3

PREVIEW - YOUFIXTHIS.COM

Download full manual at youfixthis.com

Type 1

MODEL	SERIAL NUMBER RANGE
Solar 220LC-V	0001 thru 0125
Solar 220LL	1001 and 1125

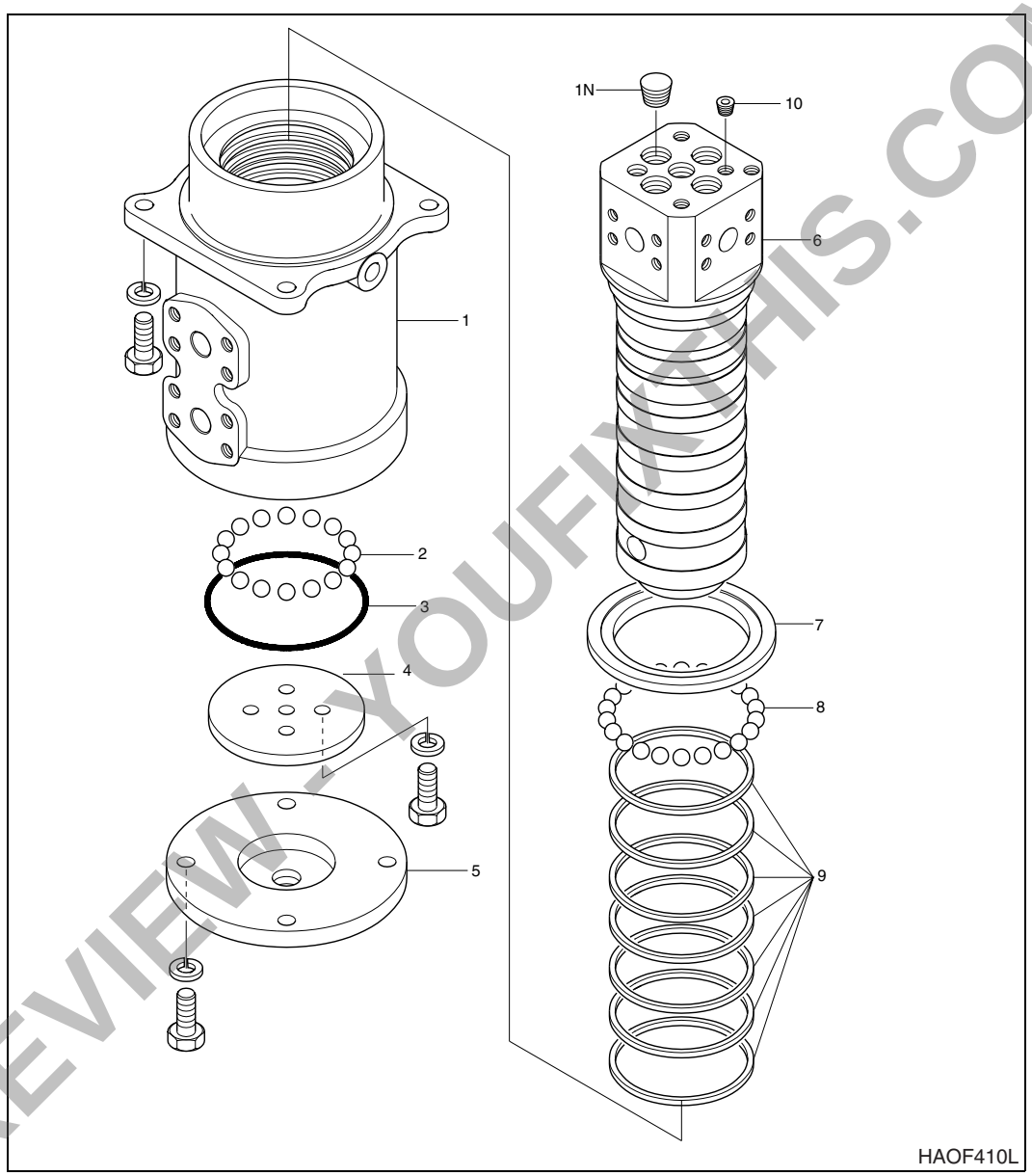

Figure 1

PREVIEW - YOUFIXTHIS.COM

Download full manual at youfixthis.com

10. Use second piston tool described at beginning of this procedure to separate piston. Detach cushion ring (15), taking care not to damage cushion ring.

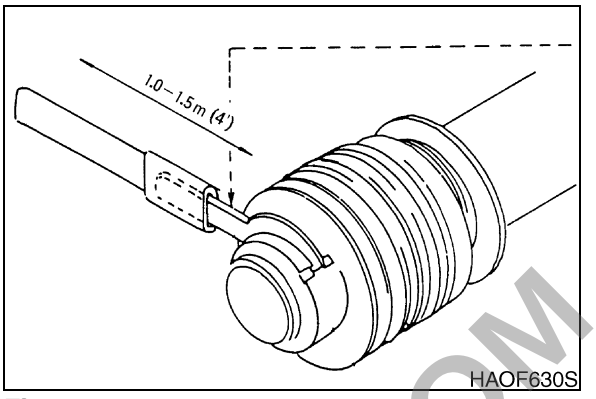

Figure 21

11. Use a plastic hammer to evenly pull off rod cover (9) from end of piston rod. Be careful not to damage rod bushing (6) and dust wiper, U-packing and other seals.

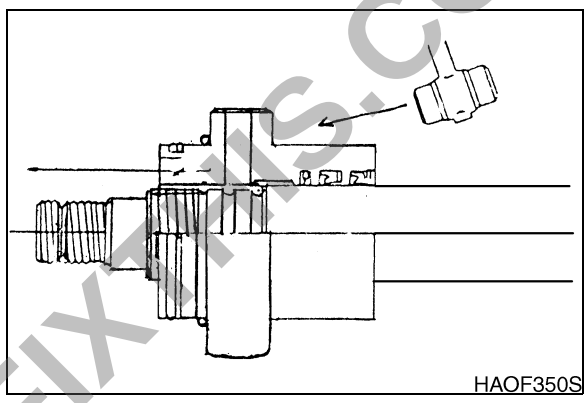

Figure 22

12. Use a dull, rounded-tip tool to pry off O-ring (11) and backup ring (12).

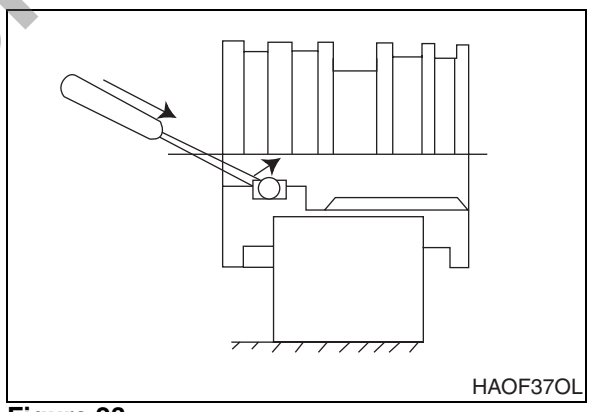

Figure 23

13. Find a screwdriver with an appropriate width tip to facilitate removal of slipper seal (19), wear ring (18) and slide ring (17) from piston (16).

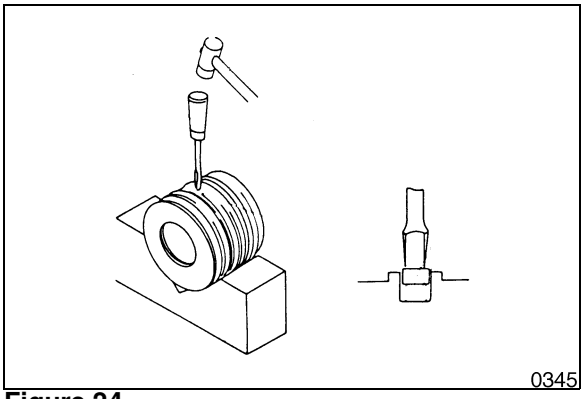

Figure 24

PREVIEW - YOUFIXTHIS.COM

Download full manual at youfixthis.com

Hydraulic Motor Operation

1. Hydraulic Motor operation.

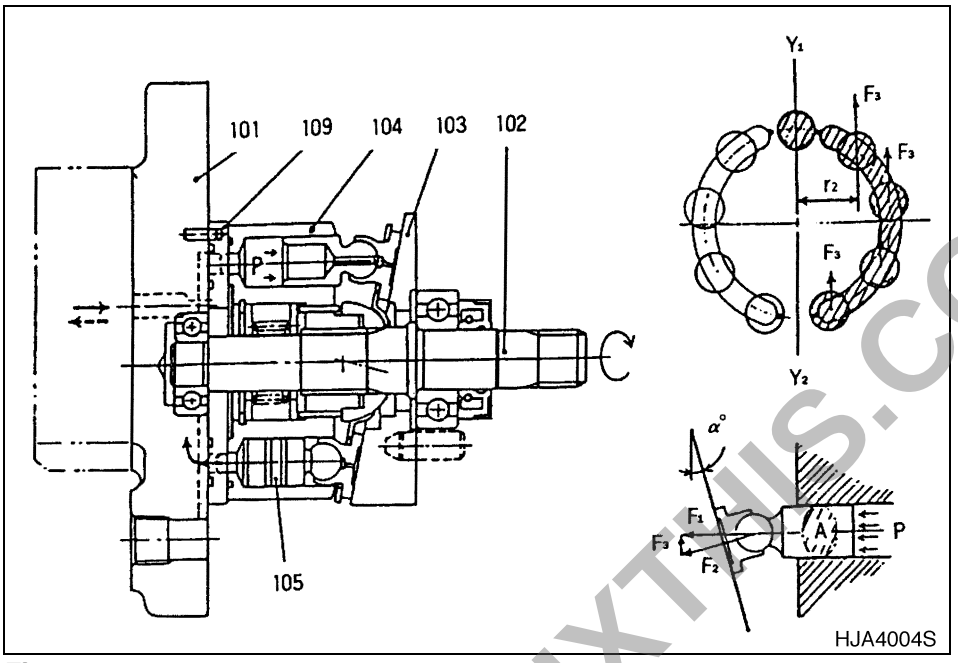

Figure 2

The high pressure oil from the hydraulic pump goes to the cylinder block (104) through the rear flange (101) of the motor and the brake valve device and the timing plate (109). This high pressure oil acts only on the single side of the line Y1-Y2 which connects the bottom dead center and the top dead center of the piston (105) stroke. The oil, after flowing into the side of the cylinder block (104), exerts force on each piston (4 or S pieces) and generates force F (p kg/cm x A cm^2). The force F is exerted on the swash plate (103): as the swash plate (103) is tilted with respect to the driving shaft (102) by a degrees, the force F is divided into two resultant forces F2 and F3. Among these forces, radial force F3 develops torque T (F3 x ri) with respect to each YI-Y2 line. The combined torque T (Z (F3 x ri)), which is a rotation force, rotates the cylinder block through pistons (105). The cylinder block is coupled with the driving shaft by a spline, and the driving torque is transferred to the shaft.

PREVIEW - YOUFIXTHIS.COM

Download full manual at youfixthis.com

4. Insert ball bearing (21) into hub (1).
5. Insert outer races of three roller bearings (22).

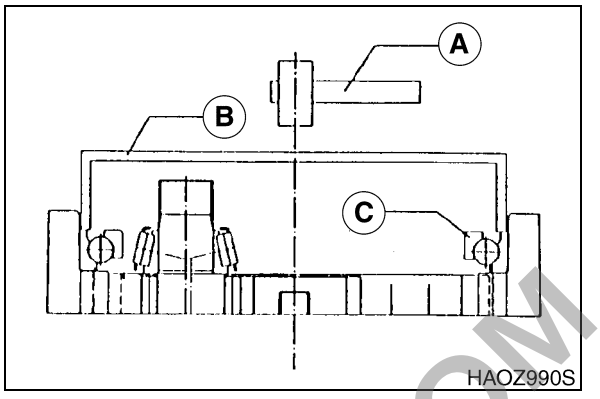

Figure 79

6. Install hold flange (3) at spindle (2).

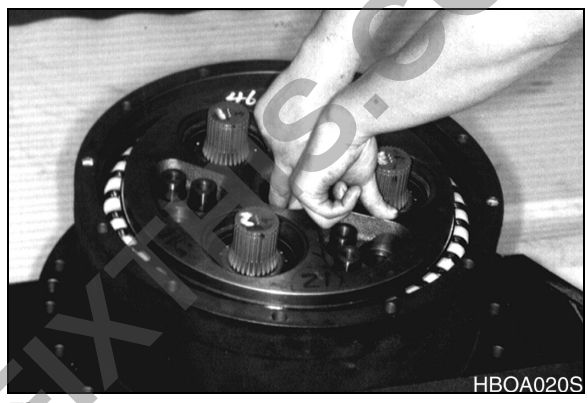

Figure 80

7. Coat locktite #638 at spindle (2) threads.
8. Place flat washers (37) in the three bolt holes of the flange (3).

   Tightening Torque:
   20 kg•m (145 ft lb).
9. Hammer six parallel pins with an air chisel until it reaches pin hole bottom.



Figure 81

10. Tighten allen head bolt (19) to specified torque.

    Tightening Torque:
    72.3 kg•m (523 ft lb).

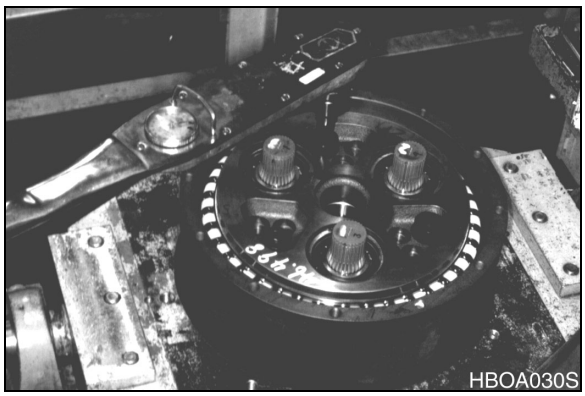

Figure 82

PREVIEW - YOUFIXTHIS.COM

Download full manual at youfixthis.com

9. Remove pilot piston (643) from bore.

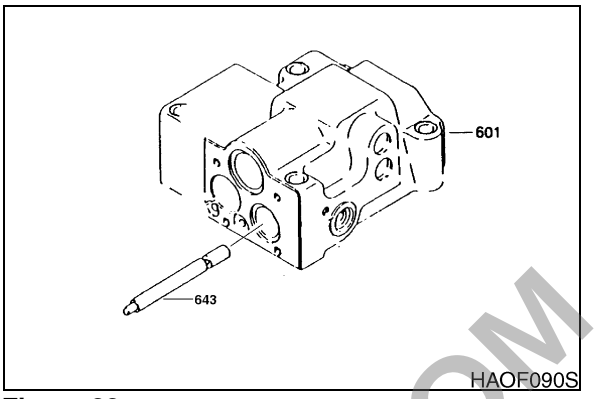

Figure 33

10. Disassemble feedback lever (611) assembly by separating side levers (612, 613). A 2 mm punch can be used to drive out pins (875) from levers.

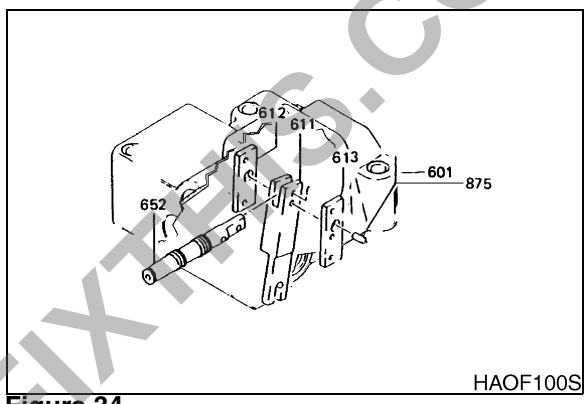

Figure 34

11. Remove piston case (622), compensator piston (621) and piston rod (623) from piston bore. Remove and inspect O-ring (733) from piston case (622).

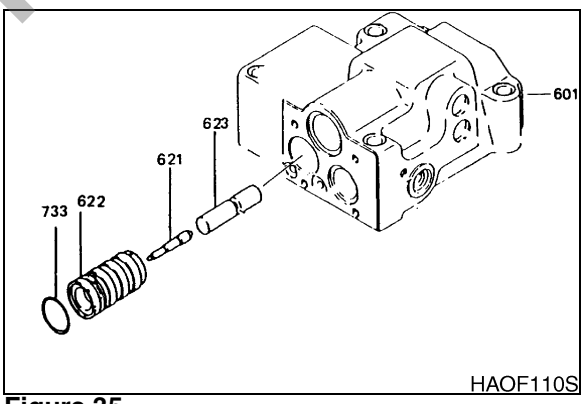

Figure 35

12. Remove spool (652) and sleeve (651) from bore by driving out pin (874). This will release feedback lever (611) from housing. Inspect snap ring (836) on sleeve.

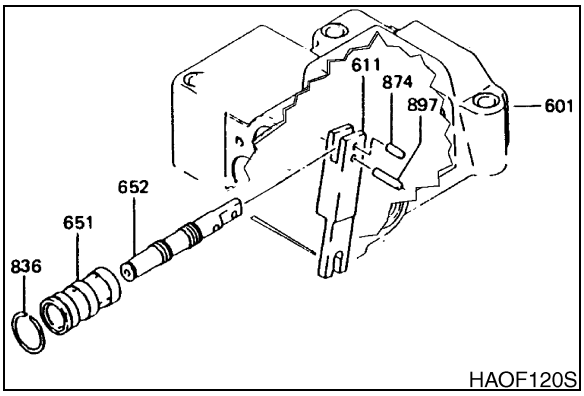

Figure 36

PREVIEW - YOUFIXTHIS.COM

Download full manual at youfixthis.com

Check Valve

Reference Number	Description
1	Cap
2	Backup Ring
3	O-ring
4	Spring
5	Nylon Chip
6	Check

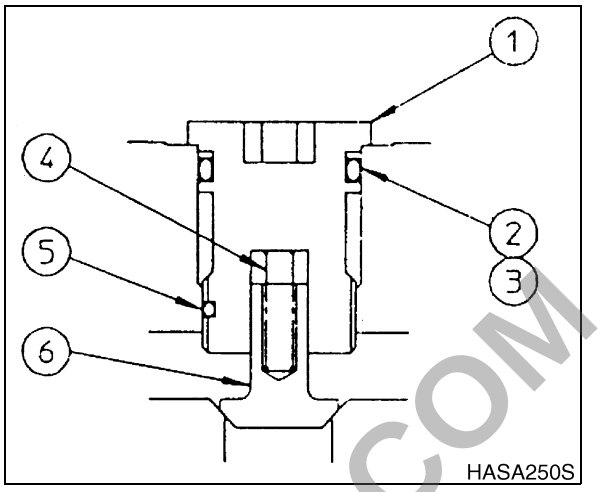

Figure 40

Cap

Reference Number	Description
1	Cap
2	Backup Ring
3	O-ring
4	Nylon Chip

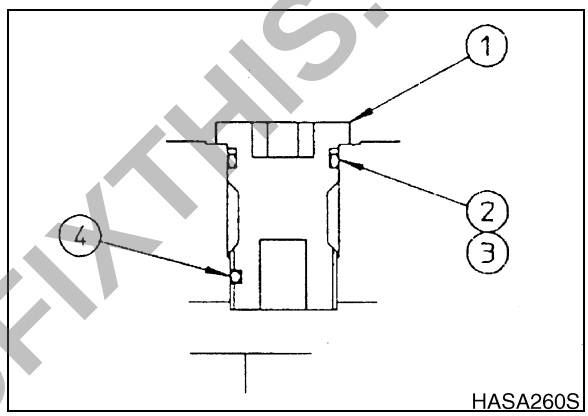

Figure 41

Check Valve [TI]

Reference Number	Description
1	Cap
2	O-ring
3	Cap
4	Spacer
5	Backup Ring
6	O-ring
7	Spring
8	Check
9	Nylon Chip

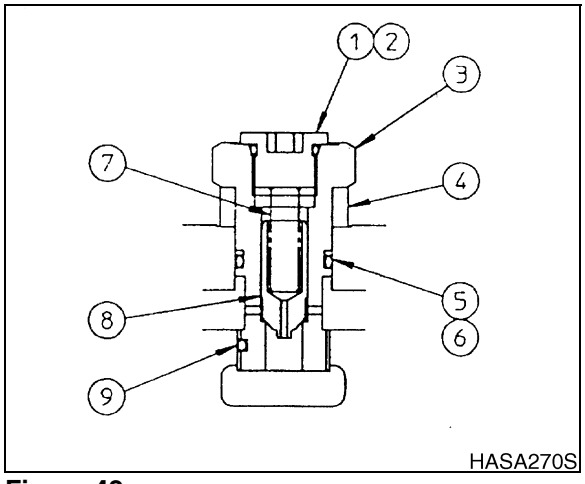

Figure 42

PREVIEW - YOUFIXTHIS.COM

Download full manual at youfixthis.com

DAEWOO
DAEWOO HEAVY INDUSTRIES & MACHINERY LTD.

PILOT CONTROL VALVE (WORK LEVER / JOYSTICK)

⚠ CAUTION!

Follow all safety recommendations and safe shop practices outlined in the front of this manual or those contained within this section.

Always use tools and equipment that is in good working order.

Use lifting and hoisting equipment capable of safely handling load.

Remember, that ultimately safety is your own personal responsibility.

MODEL	SERIAL NUMBER RANGE
Solar 140W-V	1001 and Up
Solar 160W-V	1001 and Up
Solar 175LC-V	1001 and Up
Solar 180W-V	1001 and Up
Solar 210W-V	1001 and Up
Solar 225LC-V	1001 and Up
Solar 225NLC-V	1001 and Up
Solar 255LC-V	1001 and Up
Solar 300LC-V	1001 and Up
Solar 340LC-V	1001 and Up

PREVIEW - YOUFIXTHIS.COM

Copyright 2002 Daewoo

November 2002

Download full manual at youfixthis.com

11. Install plug assembly (21 - 24) with push rod assembly (14 - 20) on body (1 and 2).

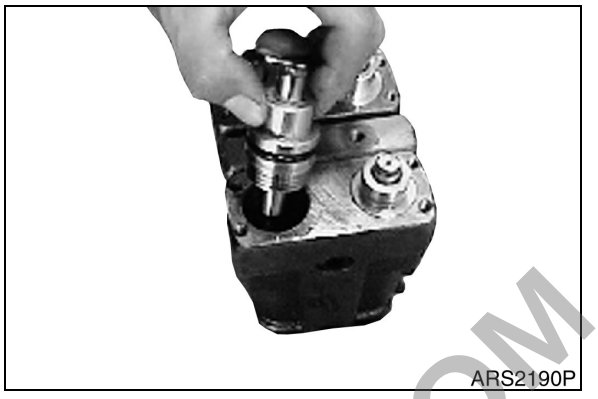

Figure 42

12. Install cover (25) on the upside of body (1 and 2).

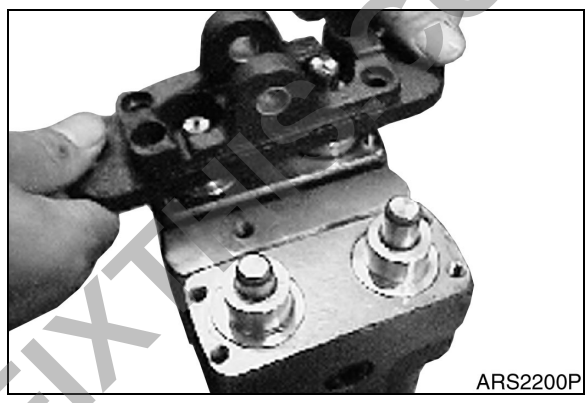

Figure 43

13. Tighten wrench bolt (26).

    NOTE: *Tightening torque: 88 kg•cm (6 ft lb).*

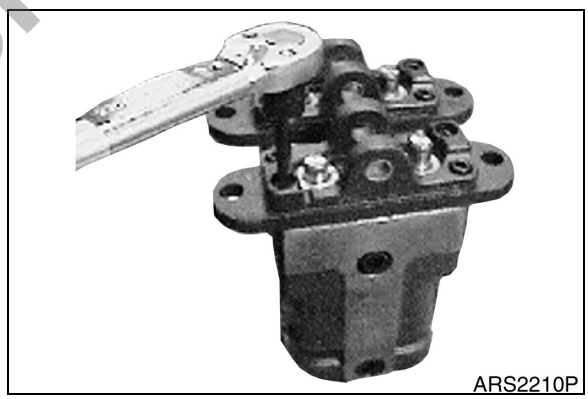

Figure 44

14. Put cam (27) on cover (25) and install cam shaft (29).

IMPORTANT
Check whether there is a play of cam.

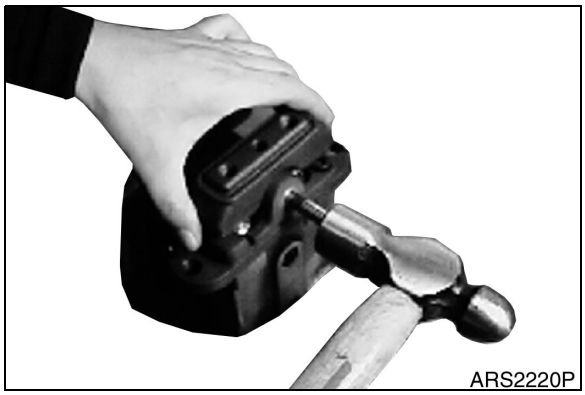

Figure 45

PREVIEW - YOUFIXTHIS.COM

Download full manual at youfixthis.com

FILTER/OIL INFORMATION

This mode displays total operating hours of filters and oils.

After changing the filter and oil, reset the operating hour and then the operating hours until the next service interval can be easily checked.

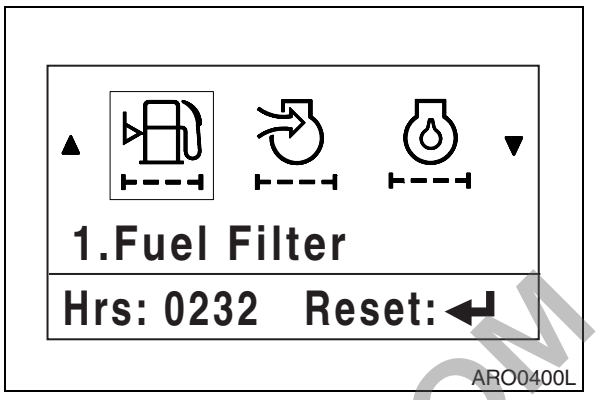

Figure 16

Menu Display Order and Icon Explanation

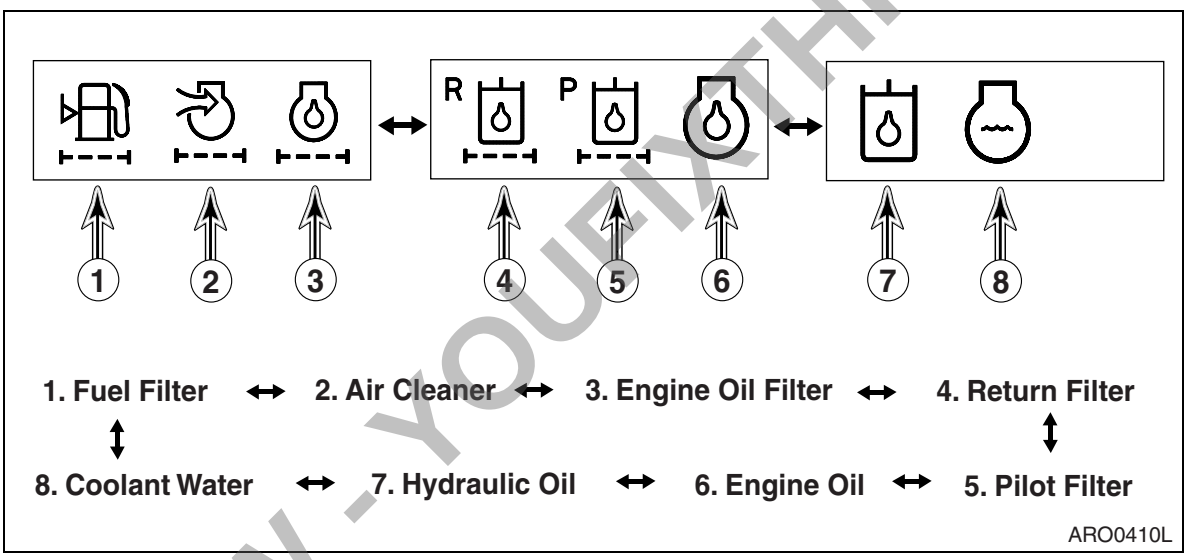

Figure 17

PREVIEW - YOUFIXTHIS.COM

Download full manual at youfixthis.com

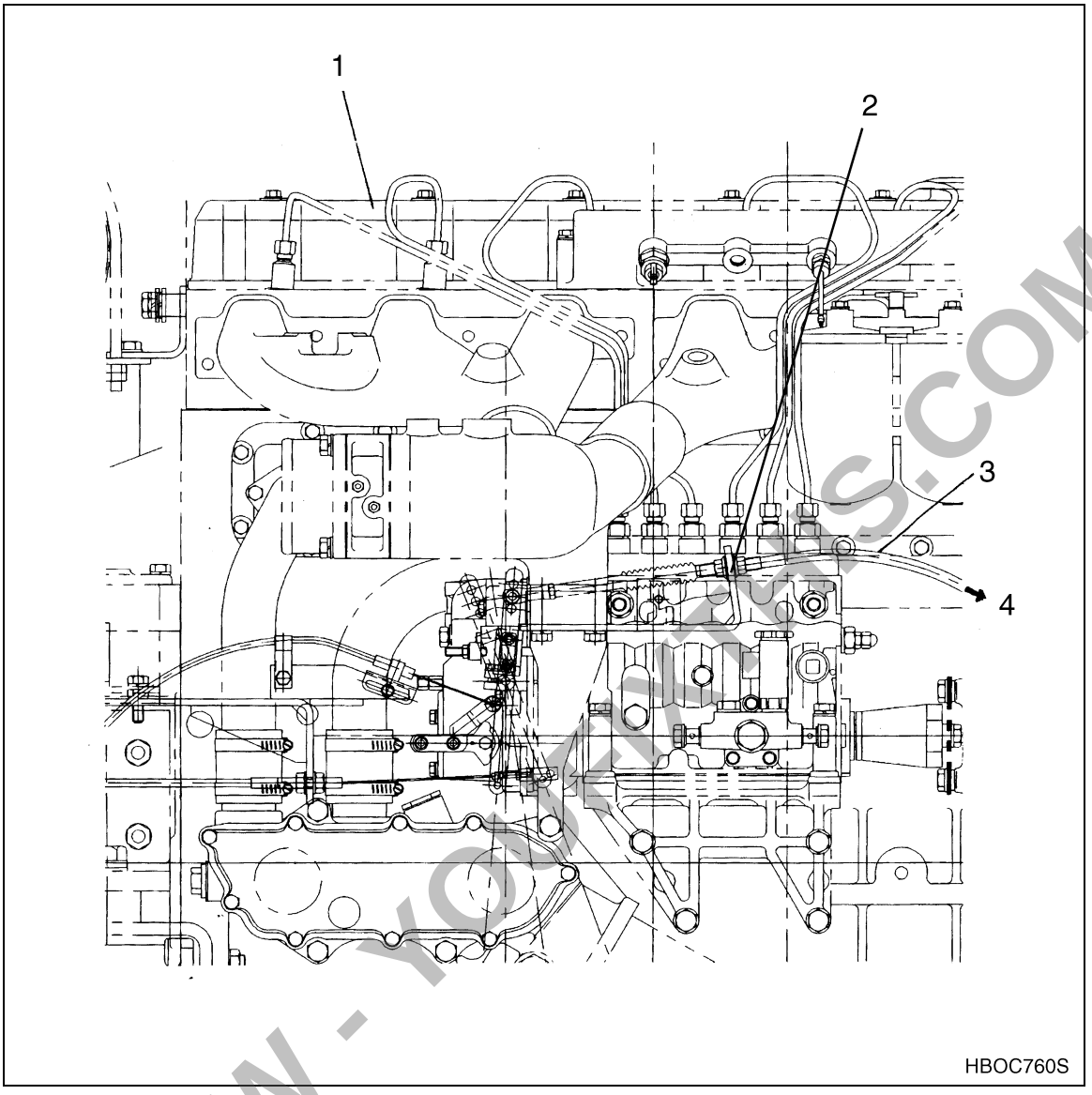

Figure 65

Reference Number	Description
1	Engine - Fuel Control Lever Area
2	Control Motor Cable Bracket

Reference Number	Description
3	Engine Speed Control Cable
4	To Engine Control Motor

PREVIEW - YOUFIXTHIS.COM

Download full manual at youfixthis.com

PREVIEW ONLY

You're viewing 25 of 684 pages

The full manual includes:

- All 684 pages, complete
- Searchable PDF (find any keyword)
- No watermarks
- Instant download
- Print-ready quality

GET FULL MANUAL NOW

Daewoo Solar 225NLC-V Shop Manual

Scan or click anywhere
youfixthis.com

Click anywhere on this page to get the full manual