GENERAL DIMENSIONS

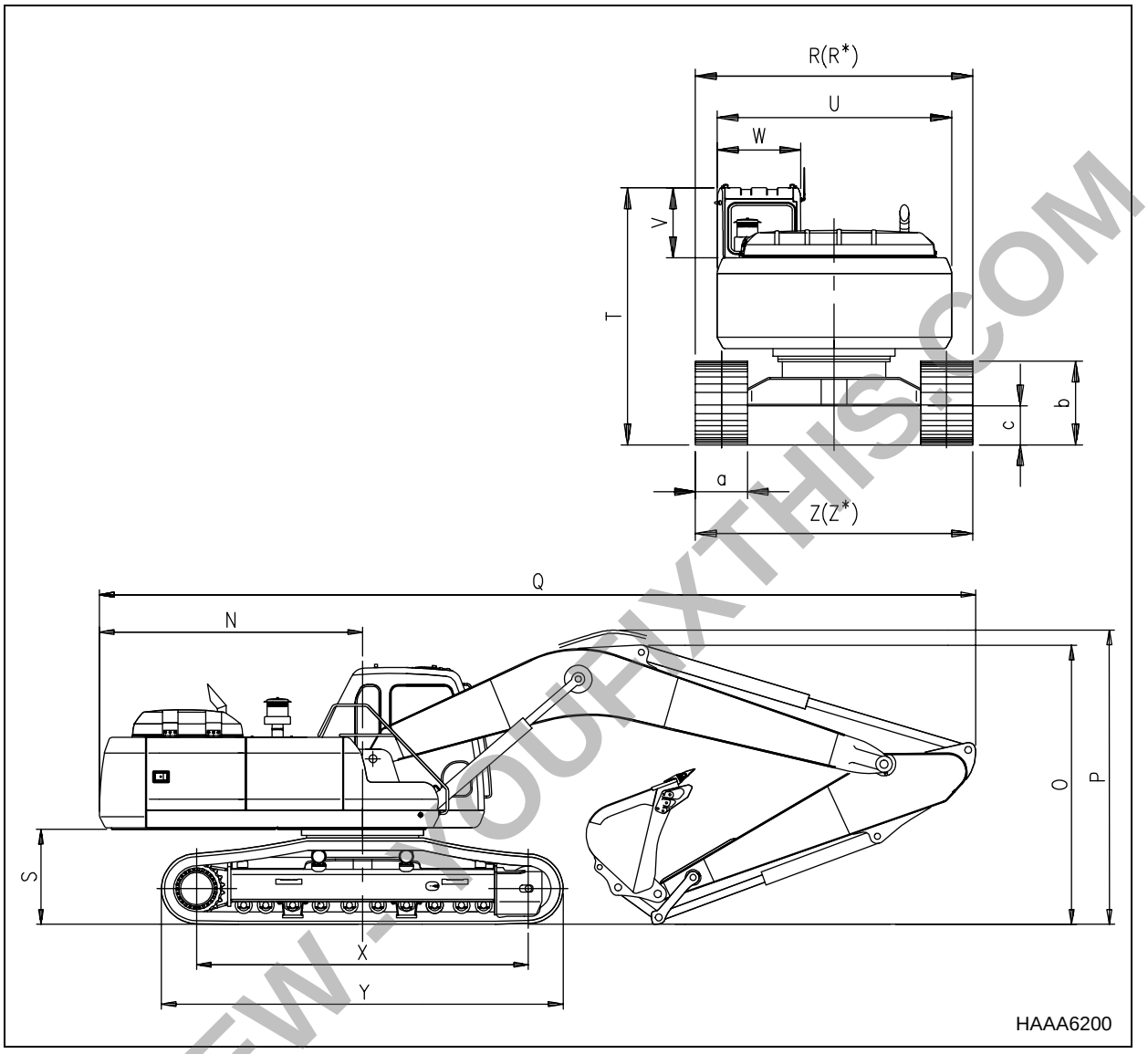

Figure 2

Boom Type (One Piece)		5,900 mm				5,300 mm	
Arm Type		3,000 mm	2,000 mm	2,500 mm	3,500 mm	2,000 mm	2,500 mm
Bucket Type		0.95 cu. m	1.17 cu. m	1.10 cu. m	0.80 cu. m	1.31 cu. m	1.17 cu. m
Tail Swing Radius	N	3,035 mm					
Shipping Height (Boom)	O	3,220 mm	3,140 mm	3,180 mm	3,300 mm	3,260 mm	3,150 mm
Shipping Height (Hose)	P	3,400 mm	3,290 mm	3,330 mm	3,500 mm	3,410 mm	3,300 mm
Shipping Length	Q	10,110 mm	10,200 mm	10,140 mm	10,120 mm	9,600 mm	9,540 mm

PREVIEW - YOUFIXTHIS.COM

Download full manual at youfixthis.com

GENERAL MAINTENANCE PROCEDURES

⚠ CAUTION!
Follow all safety recommendations and safe shop practices outlined in the front of this manual or those contained within this section. **Always use tools and equipment that is in good working order.** **Use lifting and hoisting equipment capable of safely handling load.** **Remember, that ultimately safety is your own personal responsibility.**

MODEL	SERIAL NUMBER RANGE
ALL MODELS	ALL RANGES

PREVIEW - YOUFIXTHIS.COM

Copyright 1998 Daewoo

September 1998

Download full manual at youfixthis.com

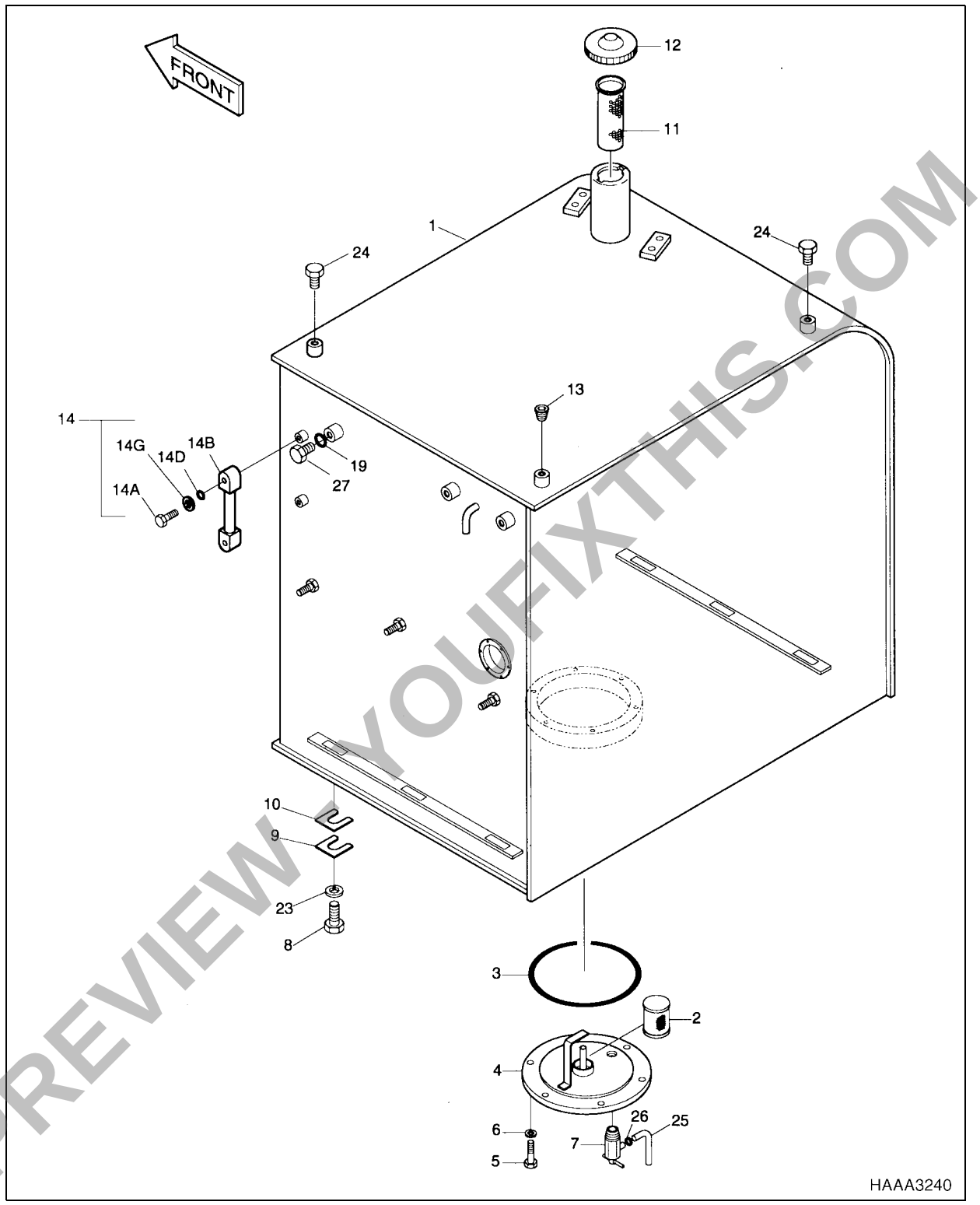

Figure 1

PREVIEW - YOUFIXTHIS.COM

Download full manual at youfixthis.com

REMOVAL

CAUTION!

Avoid disassembling cab if there are strong wind gusts, which could catch large surface area of cab shell and push it sideways during lift.

1. Park on firm and level ground.
2. Lower bucket to ground.
3. Shut engine down and remove key from starter switch.

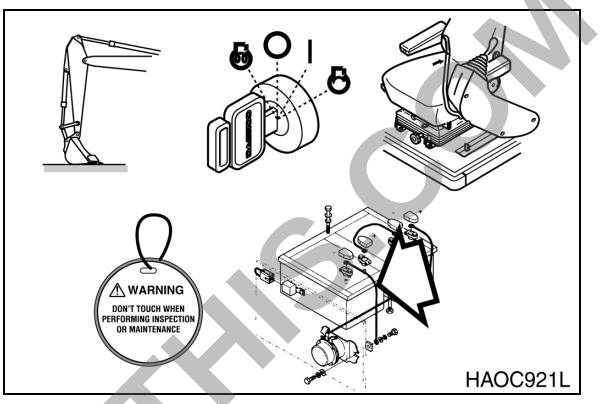

Figure 1

WARNING!

If engine must be run while performing maintenance, use extreme care. Always have one person in the cab at all times. Never leave the cab with the engine running.

4. Set safety lever on "LOCK" position.
5. Hang maintenance warning tag on controls.
6. Disconnect negative (-) battery cable leading to frame from battery.
7. Prepare cab shell for removal by disconnecting wiring connectors for:
   A. Cab interior lighting.
   B. External light wiring.
   C. Radio antenna and connections.
   D. Wiper/washer connections.

NOTE: *Control console wiring harnesses and hydraulic piping lines that pass through the floor of the cab do not need to be disassembled.*

NOTE: *If unit is equipped with a cab protective structure (for forestry, or hazardous working conditions), it must be removed.*

PREVIEW - YOUFIXTHIS.COM

Download full manual at youfixthis.com

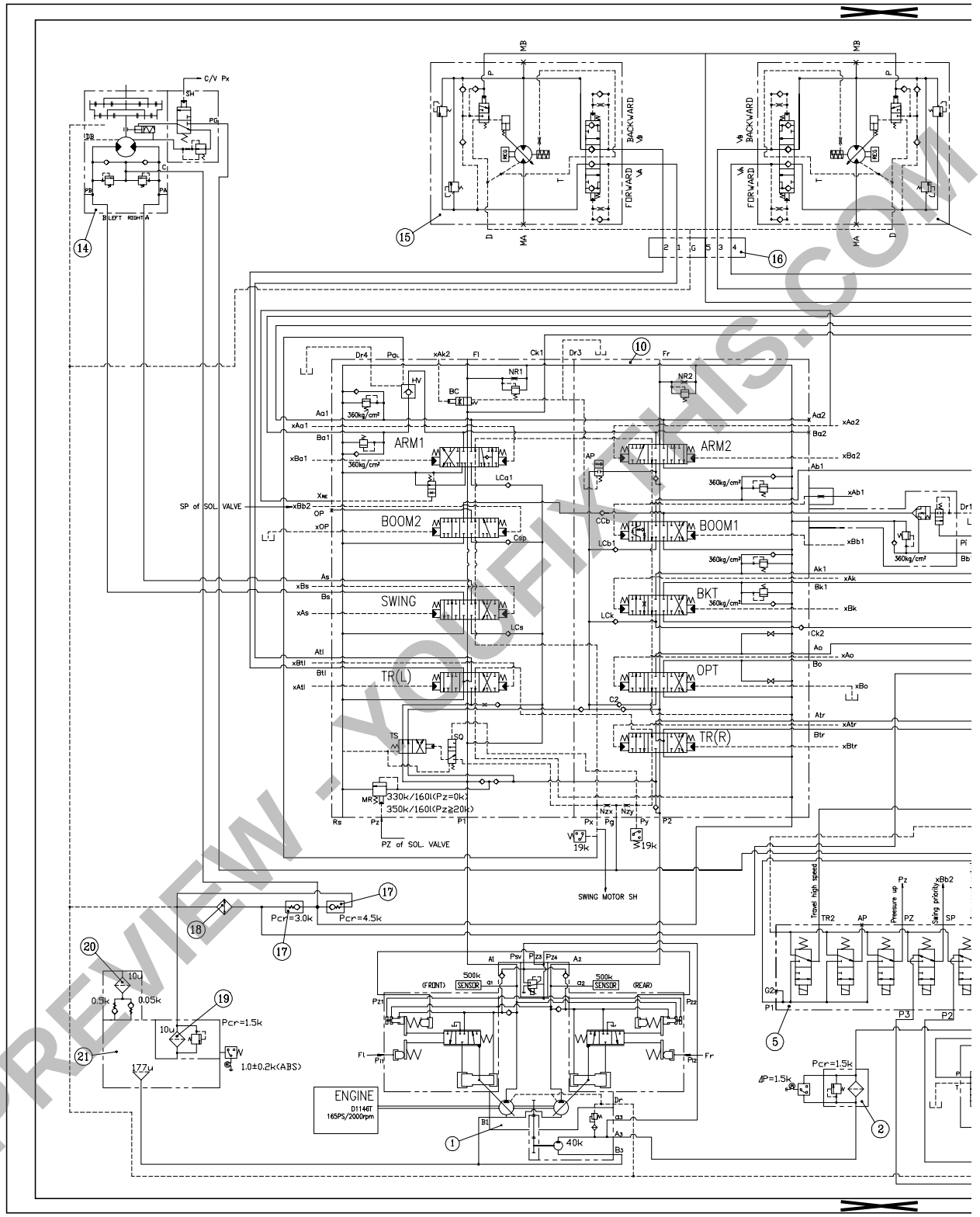

Figure 2

Download full manual at youfixthis.com

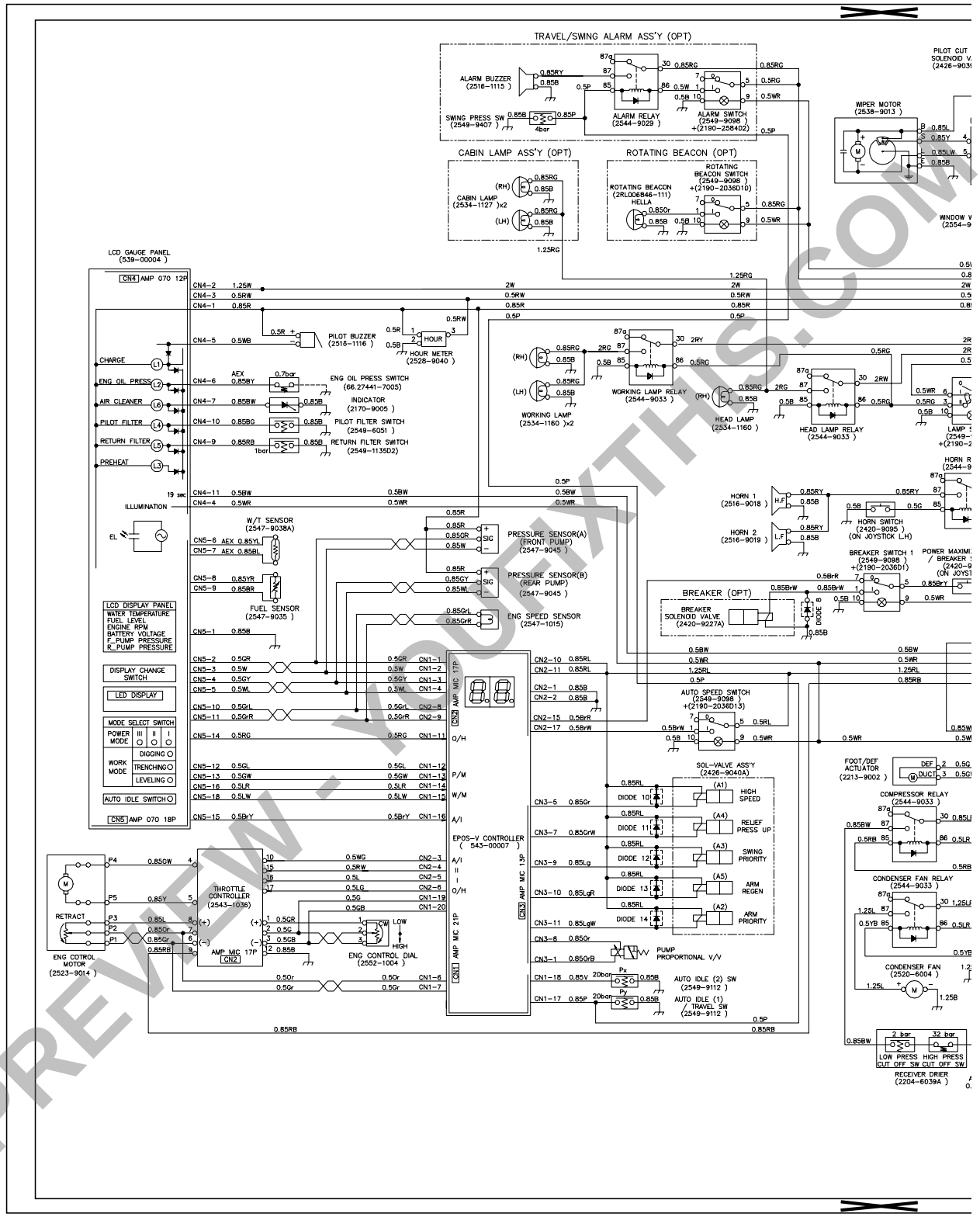

Figure 2

PREVIEW - YOUFIXTHIS.COM

Download full manual at youfixthis.com

4.Malfunction Display Readout and Reset Procedure					
No.	**Fault Area**	**Cause**	**Display Readout**	**Action**	**Reset Procedure**
1	Pump Discharge Volume Control Valve (E.P.P.R. Valve)	Short Circuit	 HAOH400L	Cut Off Output Current (0 mA)	After correcting problem, turn starter switch from "OFF" to "ON."
2	Relief Pressure Up Solenoid Valve	Short Circuit	 HAOH410L	Cut Off Output Current (0 mA)	After correcting problem, turn starter switch from "OFF" to "ON."
3	Travel Speed - II Solenoid Valve	Short Circuit	 HAOH420L	Cut Off Output Current (0 mA)	After correcting problem, turn starter switch from "OFF" to "ON."
4	Swing Priority Control Solenoid Valve	Short Circuit	 HAOH430L	Cut Off Output Current (0 mA)	After correcting problem, turn starter switch from "OFF" to "ON."
5	Arm Regeneration Control Solenoid Valve	Short Circuit	 HAOH440L	Cut Off Output Current (0 mA)	After correcting problem, turn starter switch from "OFF" to "ON."
6	Arm Priority Control Solenoid Valve	Short Circuit	 HAOH450L	Cut Off Output Current (0 mA)	After correcting problem, turn starter switch from "OFF" to "ON."
7	Relief Pressure Up Solenoid Valve	Open Circuit	 HAOH460L		Automatic reset when problem is corrected.
8	Travel Speed - II Solenoid Valve	Open Circuit	 HAOH470L		Automatic reset when problem is corrected.
9	Swing Priority Control Solenoid Valve	Open Circuit	 HAOH480L		Automatic reset when problem is corrected.
10	Arm Regeneration Control Solenoid Valve	Open Circuit	 HAOH490L		Automatic reset when problem is corrected.

PREVIEW - YOUFIXTHIS.COM

Download full manual at youfixthis.com

TABLE OF CONTENTS

Safety

Track Excavator Safety.....S0102000

Specifications

Specifications for Solar 250LC-V.....S0205020

General Maintenance

General Maintenance Procedures.....S0302000

Standard Torques.....S0309000

Upper Structure

Cab.....S0402000

Counterweight.....S0403000

Fuel Tank.....S0405020

Fuel Transfer Pump.....S0405500

Swing Bearing.....S0407000

Swing Reduction Gearbox.....S0408000

Lower Structure and Chassis

Track Assembly.....S0505100

Engine and Drive Train

Air-Conditioner.....S0605010

Drive Coupling (Main Pump).....S0609000

Hydraulics

Hydraulic System Troubleshooting, Testing and Adjustment.....S0702120

Accumulator.....S0703000

Center Joint (Swivel).....S0704010

Cylinders.....S0705000

PREVIEW - YOUFIXTHIS.COM

Download full manual at youfixthis.com

TRACK EXCAVATOR SAFETY

⚠ CAUTION!
Follow all safety recommendations and safe shop practices outlined in the front of this manual or those contained within this section. **Always use tools and equipment that is in good working order.** **Use lifting and hoisting equipment capable of safely handling load.** **Remember, that ultimately safety is your own personal responsibility.**

MODEL	SERIAL NUMBER RANGE
Solar 130LC-V	0001 and Up
Solar 220LC-V	0001 and Up
Solar 170LC-V	0001 and Up
Solar 220N-V	1001 and Up
Solar 250LC-V	1001 and Up
Solar 290LC-V	0001 and Up
Solar 330LC-V	1001 and Up
Solar 400LC-V	1001 and Up
Solar 450LC-V	1001 and Up

PREVIEW - YOUFIXTHIS.COM

Copyright 2000 Daewoo

August 2000

Download full manual at youfixthis.com

SAFETY

PREVIEW - YOUFIXTHIS.COM

Download full manual at youfixthis.com

CONDITION	SPECIFICATION
BAROMETIC PRESSURE	760 mm Hg [20°C]
COOLING FAN	686.0 mm,SUCKER
ALTERNATOR	24V x 50A
AIR CLEANER	INSTALLED
MUFFLER	NOT INSTALLED

PERFORMANCE STANDARD	SAE J1349
POWER (MAX , RATED)	165.0 ps / 2000 rpm
MAX. TORQUE	64.5 kg•m / 1300 rpm
FUEL CONSUMPTION(MIN,RATED)	180.0 g/ps•h

PREVIEW - YOUFIXTHIS.COM

Download full manual at youfixthis.com

TABLE OF CONTENTS

Removal 3
Installation 5
Window and Gasket Replacement 8
Falling Object Protective Structures (F.O.P.S.) 9

PREVIEW - YOUFIXTHIS.COM

Download full manual at youfixthis.com

3. Lift outer ring and check that inner ring can move freely. See Figure 5, if not, replace seal (3, Figure 4) and/or seal (4, Figure 4).

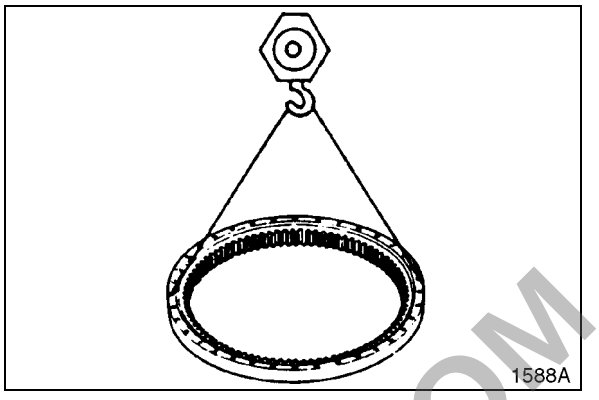

Figure 5

4. Turn inner ring and use magnet bar (1, Figure 6) to remove steel balls (2).

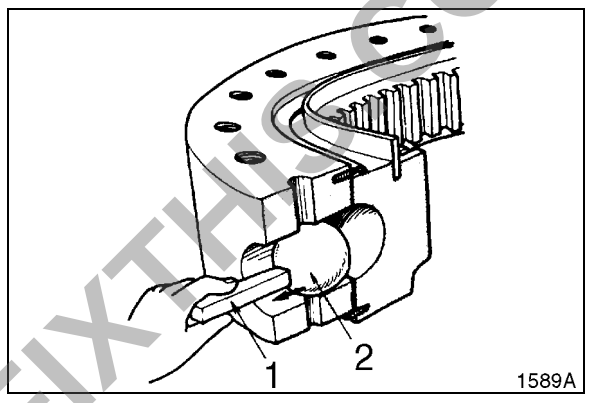

Figure 6

5. Turn inner ring and use wire (1, Figure 7) to remove retainers (2).

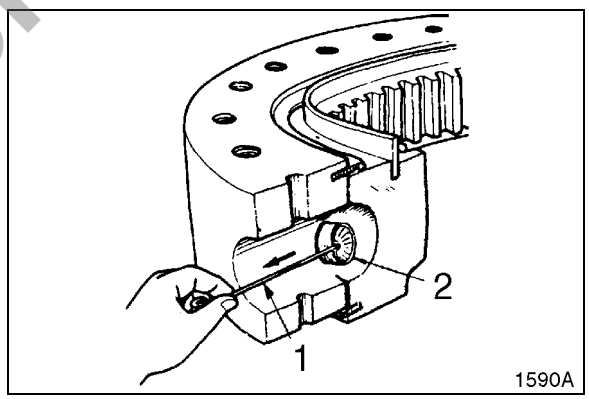

Figure 7

6. Assemble in reverse order of disassembly and then adjust the gap between the steel balls and retainers using the following guidelines: Assemble steel ball, retainer (A) and retainer (B) to bearing; if gap is too wide, adjust by moving steel balls or by replacing one of the retainers.

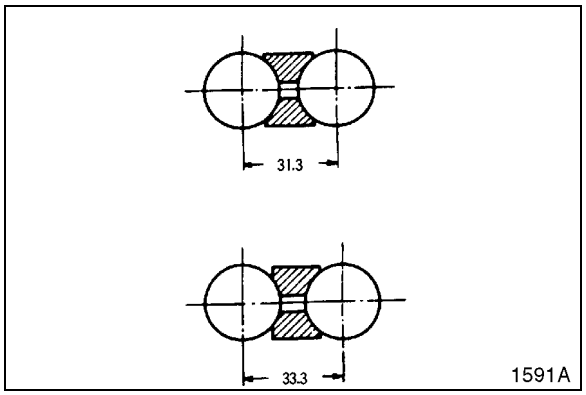

Figure 8

PREVIEW - YOUFIXTHIS.COM

Download full manual at youfixthis.com

UPPER ROLLER

PARTS LIST

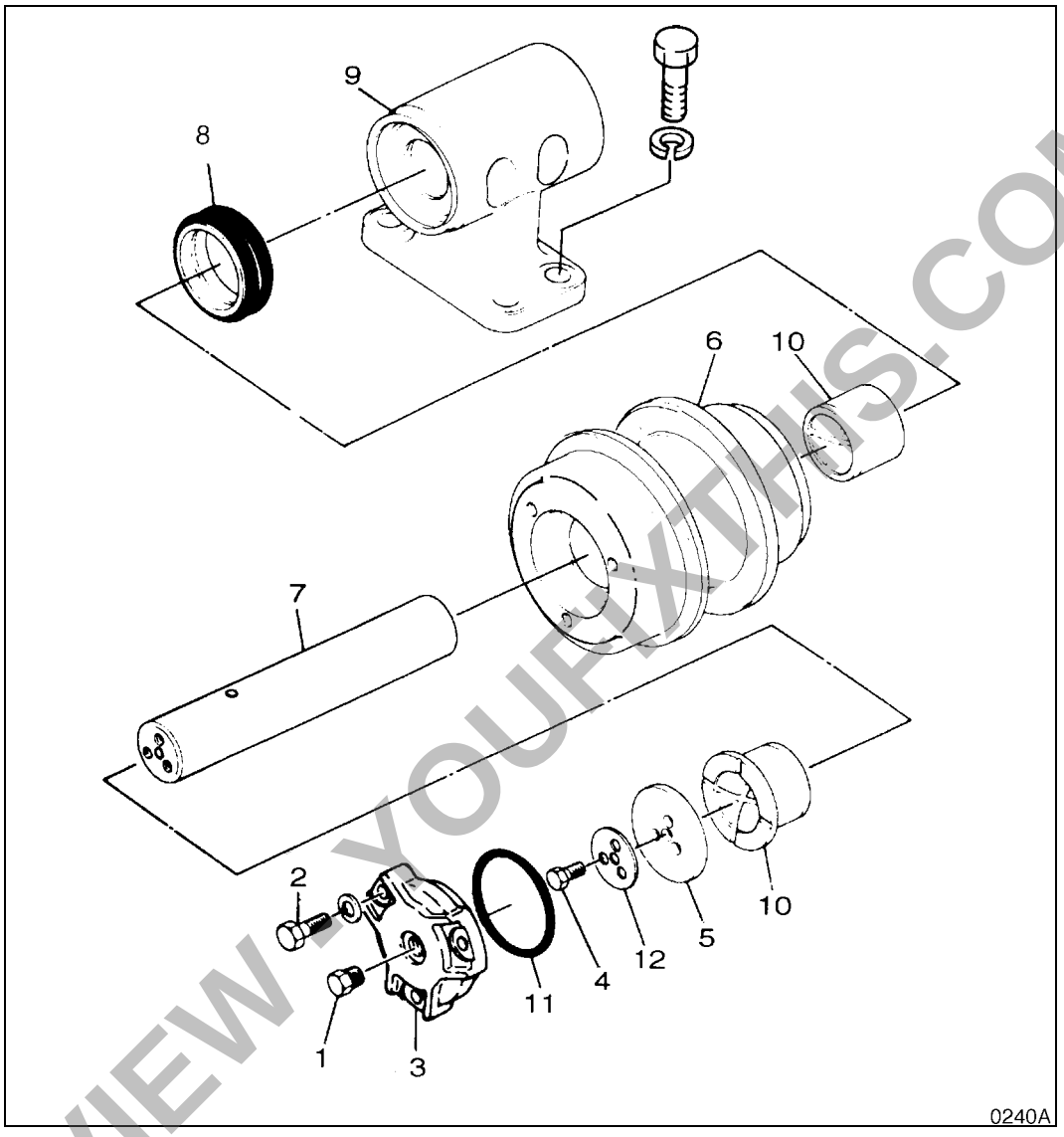

Figure 30

Reference Number	Description
1	Plug
2	Bolt
3	Cover
4	Bolt
5	Washer
6	Roller

Reference Number	Description
7	Axle
8	Group Seal
9	Bracket
10	Bushing
11	O-ring
12	Lock Washer

PREVIEW - YOUFIXTHIS.COM

Download full manual at youfixthis.com

MODEL	SERIAL NUMBER RANGE
Solar 400LC-III	0001 and Up
Solar 400LC-V	1001 and Up
Solar 450-III	0001 and Up
Solar 450LC-V	0001 and Up

TABLE OF CONTENTS

Drive Coupling 3
Special Tools 4
Kawasaki Pump Tool 4
Uchida Pump Tool 6
Drive Coupling Installation 7
Installation Procedure 11

PREVIEW - YOUFIXTHIS.COM

Download full manual at youfixthis.com

Problem	Possible Causes	Remedies
Travel motors operate very slowly.	Track tension poorly adjusted Low oil in idlers or rollers.	Readjust tension Refill.
	Travel brake dragging.	Repair
	Track frame out of alignment, deformed or twisted.	Repair
Swing motor inoperable.	Swing brake not releasing.	Repair or replace
	Relief valve malfunction.	Repair or replace
	Pilot piping damaged.	Repair or replace
Swing motor operates unevenly.	Swing gear, bearing or mounting loose or worn.	Repair or replace
	Lubricant worn away, inadequate.	Grease
	Swing relief valve may be faulty.	Repair/Replace the swing relief valve.

TROUBLESHOOTING - CONTROL VALVE

Check control valve problems only after other hydraulic circuit operational tests have been made. Refer to the "Troubleshooting Baseline Recommendations" procedure. Pump flow, pilot pressure, Negacon pressure, main relief pressure, and port relief pressure should all be checked before starting to work on the control valve. Make sure the hydraulic system is topped up to the required level and free of oil leaks or air in the system that could cause cavitation problems.

Problem	Possible Causes	Remedies
Main Relief Valve	Particulate contamination.	Disassemble, clean main poppet.
	Broken or damaged spring.	Replace
	Adjusting screw loose.	Readjust
	Main poppet sticking.	Repair/replace
	Clogged orifice in pilot passage to control valve.	Clean/replace
Cylinder goes down in spool neutral.	Excessive clearance between casing and spool.	Replace spool or casing.
	Spool does not return to neutral/ sticking spool.	Check secondary pilot pressure.
	Spool does not return to neutral because of dirt or other contaminants.	Clean
	Broken or damaged spring.	Replace
	Main relief or port relief not operating properly.	See above
	Impurities in pilot circuit.	Clean

PREVIEW - YOUFIXTHIS.COM

Download full manual at youfixthis.com

6. Assemble cushion ring (15) and attach piston assembly to piston rod.

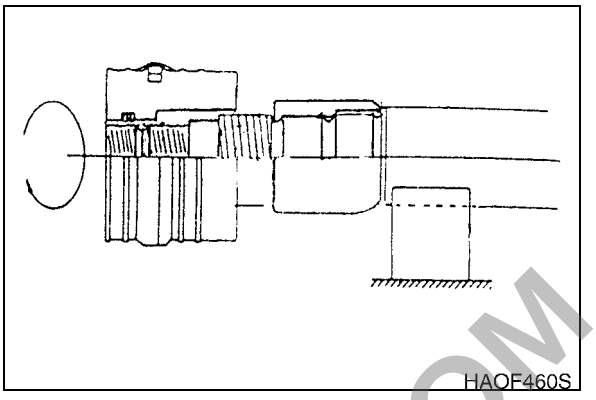

Figure 30

7. Use specially fabricate or factory-sourced tool to tighten piston nut (22).

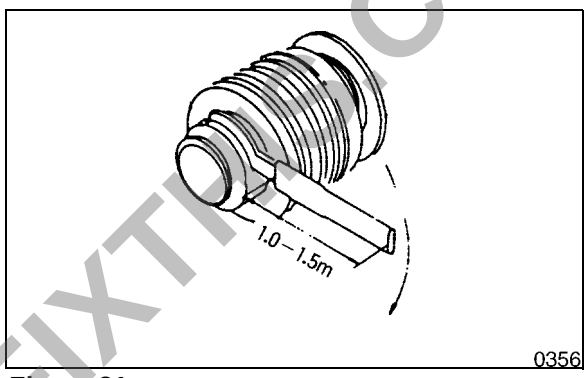

Figure 31

8. Assemble wear ring (18), slide ring (17) and set screw(23) to piston assembly.

Reference Number	Description
1	Set Screw

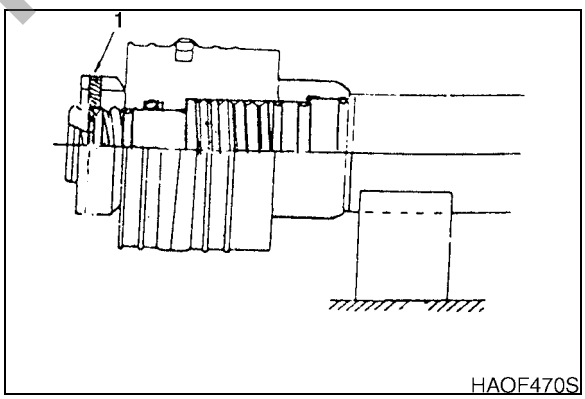

Figure 32

9. Immobilize body of cylinder prior to reassembly.

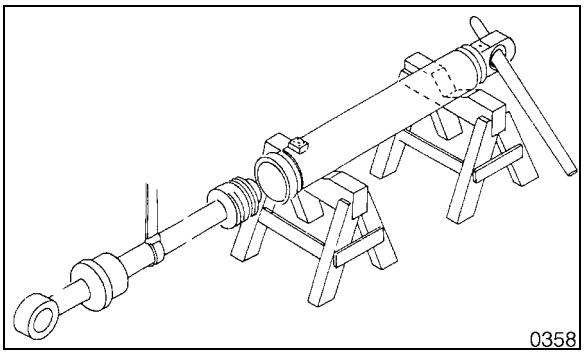

Figure 33

PREVIEW - YOUFIXTHIS.COM

Download full manual at youfixthis.com

TRAVEL MOTOR

Parts List

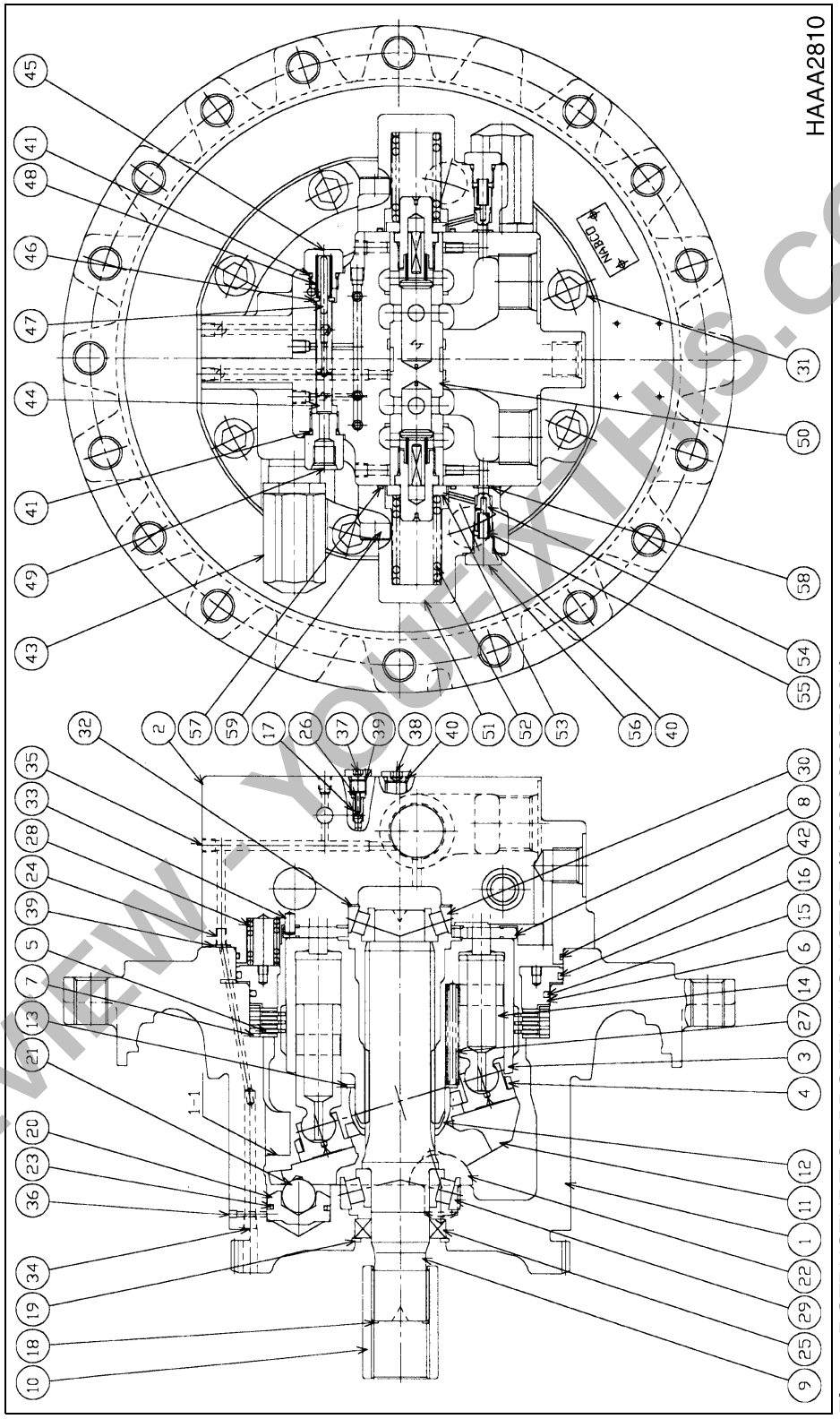

Figure 5 STRUCTURE OF PROPELLING MOTOR (2162-2-208979-01)

PREVIEW - YOUFIXTHIS.COM

Download full manual at youfixthis.com

Reference Letter	Item	Criteria	Allowable Limit	Disposition
A	Wear of planetary shaft.	Smooth without abnormal wear or seizure.	Smooth without abnormal wear or seizure.	Change a set.
B	Condition of tooth surface.	Smooth without abnormal wear or seizure.	Diameter 1.6 mm of pitching, no cracks at root.	Change a set for plain pinion.
C	Thrust clearance of angular bearings.	-0.18 - 0.02 mm	-0.18 - 0.02 mm	Adjust shim. See Step 5 “Determining shim thickness for angular bearings.” on p a g e-55.
D	Thickness of thrust washer.	7.0 ±0.2 mm	Wear 0.1 mm	Replace.
E	Thickness of thrust washer.	4.0 ±0.2 mm	Wear 0.1 mm	Replace.

PREVIEW - YOUFIXTHIS.COM

Download full manual at youfixthis.com

3. When pilot pump and valve regulators have been removed from assembly, the two pump cylinder blocks (271) can be unbolted from center valve support plate (251) and valve block (312). A total of eight 17 mm allen-head hex bolts hold pump assemblies together - four on each side.

4. Before unbolting eight pump block fasteners, flip pump assembly top to bottom so that regulator mounting surfaces are facing down.

5. Unbolt all eight 17 mm hex bolts and separate both pumps from center valve block, taking care not to damage O-rings (719) or lose or damage either one of spring pins (886), between valve block and pump casings.

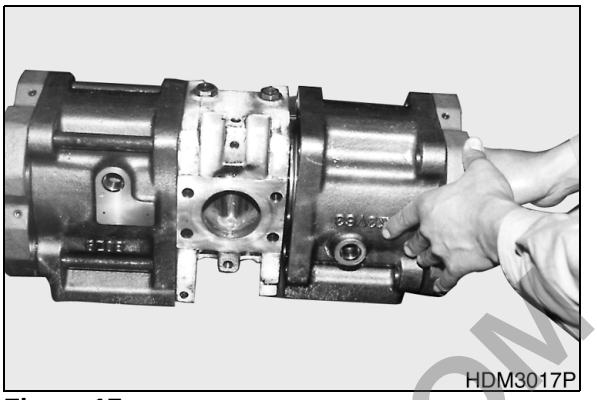
HDM3017P

Figure 17

NOTE: *When pump assembly has been disassembled to three main component sections (center valve block, front pump and rear pump), the procedure can be continued in either one of two ways. Because both pumps, on either side of the center valve block are identical, both can be disassembled simultaneously, repeating the same steps on opposite ends of the assembly at the same time. If the rebuilding procedure is at all unfamiliar, though, or there are any other reasons to take a less aggressive approach, one pump can be disassembled, rebuilt and completely reassembled while the other pump is left for reference, until rebuilding of the first pump has been completed.*

MAIN PUMP DISASSEMBLY

1. Pull out cylinder block (141) from pump casing (271), together with all nine pistons (151), nine cylinder springs (157) and nine shoes (152), including push plate (153) and round bushing (156).

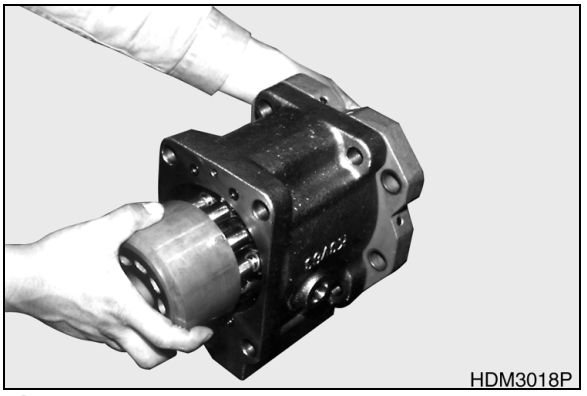
HDM3018P

Figure 18

PREVIEW - YOUFIXTHIS.COM

Download full manual at youfixthis.com

B. Boom-down (Pc > Pv) (Pi pilot signal: "ON").

Pilot signal pressure enters signal port, spool (A, Figure 19) moves to the right and chamber (1) and drain (1) are connected allowing chamber (1) to drain. Since pressure Pc is greater than Pv, oil flows through the opened poppet (B) and flows back to the tank.

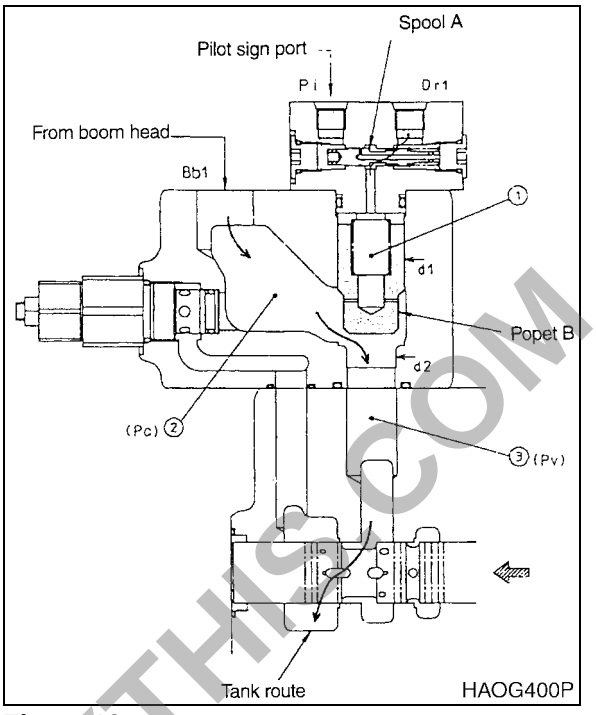

Figure 19

PREVIEW - YOUFIXTHIS.COM

Download full manual at youfixthis.com

IMPORTANT

When disassembling Arm Regeneration Valve, tag and label each component so that all parts can be reassembled in the proper order.

Reference Number	Description
1	Cap
2	Piston
3	Spool
4	Spring
5	Sleeve

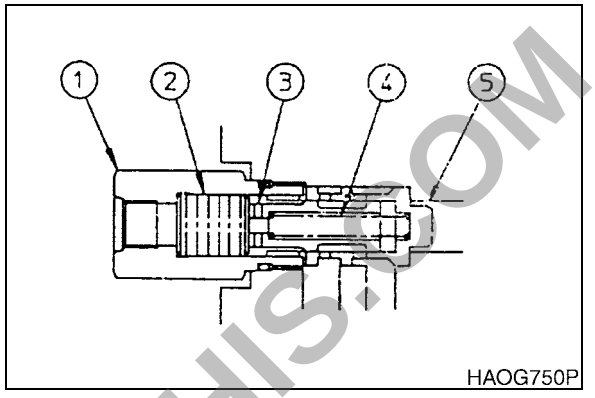

Figure 86

1. Loosen cap (1) and remove piston (2).

Cap wrench size	27 mm
Tightening torque	10 kg•m

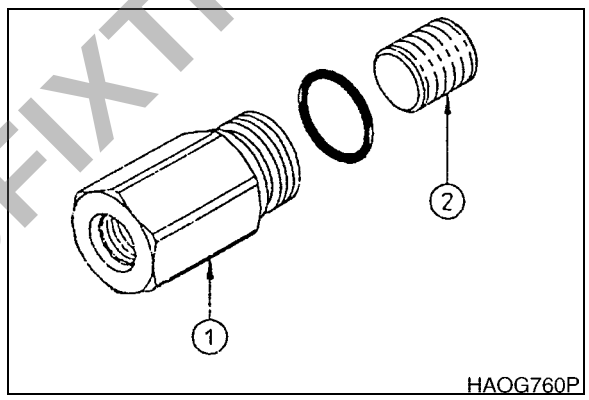

Figure 87

2. Remove spool (3), spring (4) and sleeve (5) from housing.

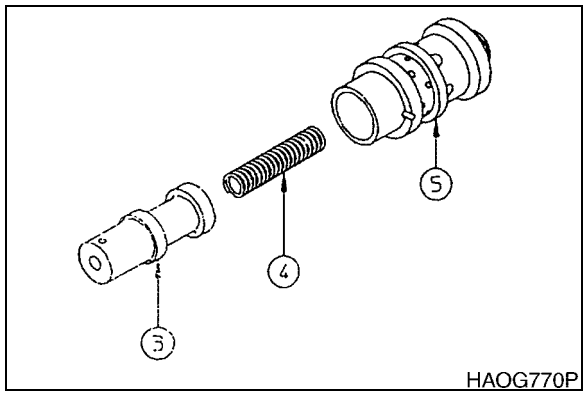

Figure 88

PREVIEW - YOUFIXTHIS.COM

Download full manual at youfixthis.com

Reference Number	Description
101	Casing
151	Plug
201	Cover
202	Plug
203	Grease Cup
210	NHU Packing
212	O-ring
214	Push Rod
215	Washer 1
217	Washer 2
218	Spring Seat
221	Retaining Ring
223	Bushing
224	Piston
225	Steel Ball

Reference Number	Description
271	Hex Bolt
301	Spool
311	Spring Seat
313	Washer 3
324	Spring
335	Spring
336	Spring
337	Spring
412	Bushing
413	Cam Shaft
420	Cam
423	Set Screw
471	Set Screw
472	Lock Nut
501	Bellows

SPECIFICATIONS

Travel Control Valve	Type:	Pilot Control
	Pressure/Stroke:	27 kg/sq cm @ 4.8 mm stroke
	Weight:	7.8 kg

TORQUE TABLE

Part Reference Number	Bolt Size	Tightening Torque
151	NPTF 1/16	6.9 ±1 N•m (70 ±10 kgf cm)
271	M12	78.5 ±9.8 N•m (800 ±100 kgf cm)
423	M6	6.9 ±1.0 N•m (70 ±10 kgf cm) Apply Loctite #241
472	M10	33.3 ±3.4 N•m (340 ±35 kgf cm)

PREVIEW - YOUFIXTHIS.COM

Download full manual at youfixthis.com

ENGINE STARTING CIRCUIT

OPERATION DURING START PROCESS

When the starter switch is turned to the start position, the 'S' and 'E' terminals of the starter controller are connected. At this time the contacts in the starter relay (8) are closed by the current flow from the battery (1, Figure 2) → fusible link (3) → 'B' terminal of the starter switch (5) → 'C' terminal of the starter switch (5) → 'C' terminal of the starter relay (8) → 'D' terminal of starter relay (8) → 'S' terminal of starter controller (7) → 'E' terminal of the starter controller → ground.

The contact point 'B' and 'PP' of starter relay (8) are connected, the pinion gear of the starter (4) is pushed forward and makes contact with the ring gear of the flywheel and the internal contacts of the starter are connected.

The current flows from the battery (1) → 'A' terminal of the battery relay (2) → 'B' terminal of the battery relay (2, Figure 2) → '30' terminal of the starter (4). The starter motor is rotated and the engine is started.

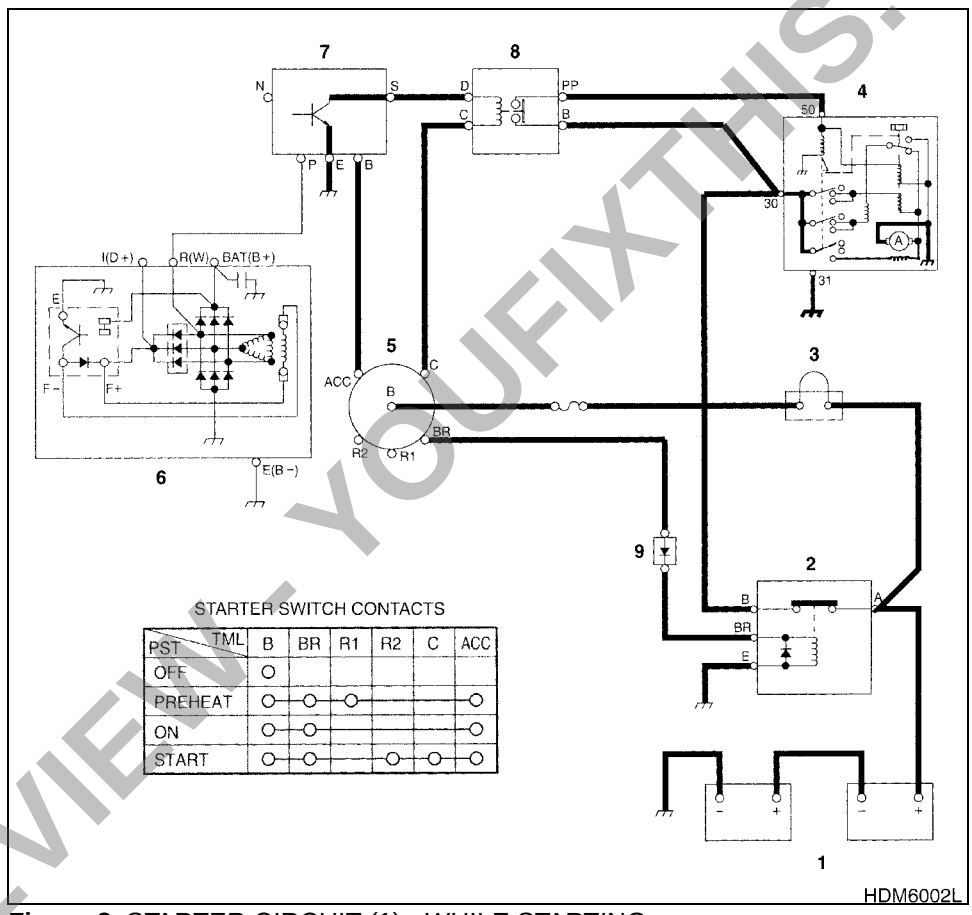

Figure 2 STARTER CIRCUIT (1) - WHILE STARTING

PREVIEW - YOUFIXTHIS.COM

Download full manual at youfixthis.com

ENGINE CONTROL DIAL

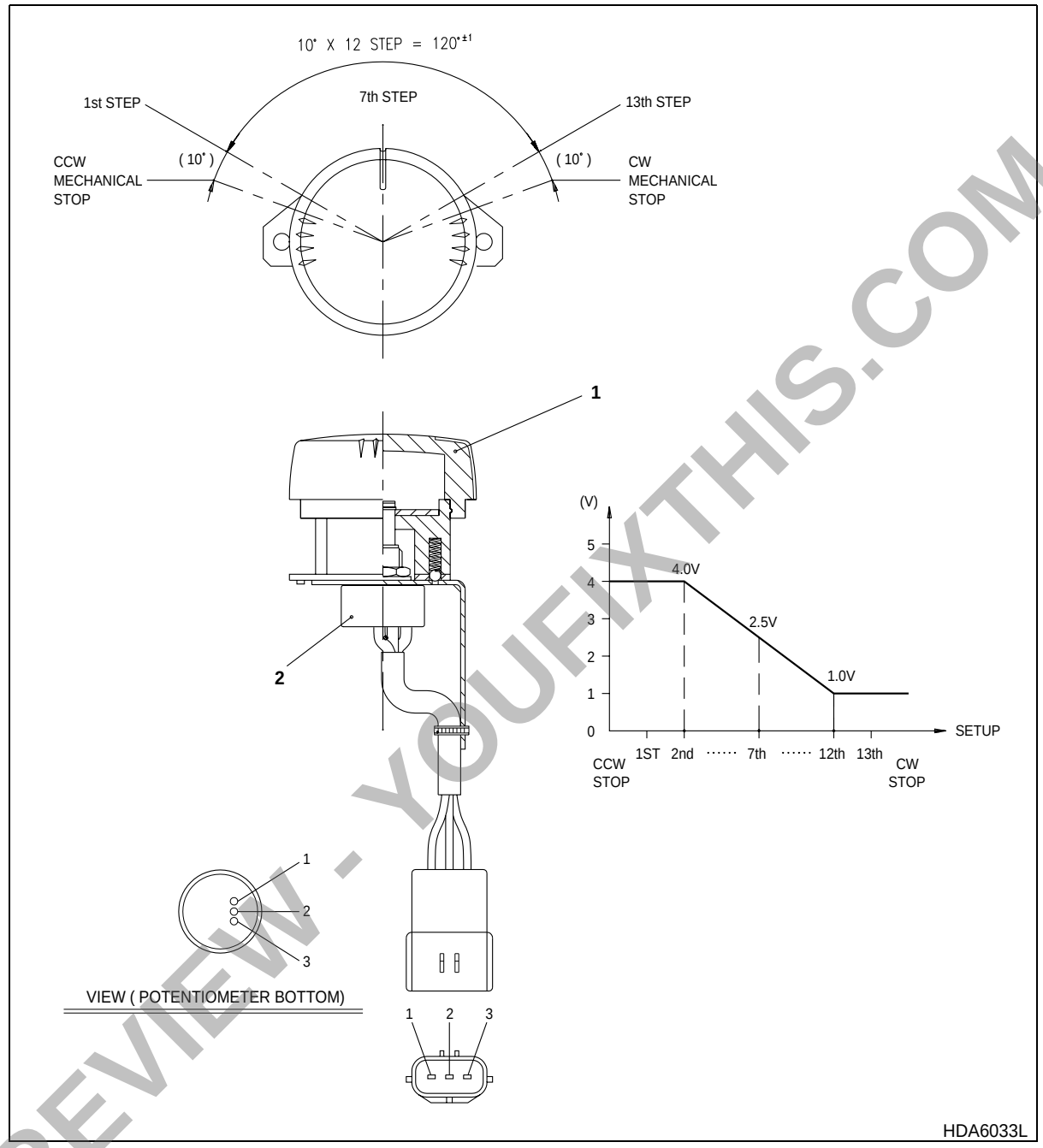

Figure 30

Reference Number	Description
1	Knob
2	Potentiometer (Variable Resistor)

PREVIEW - YOUFIXTHIS.COM

Download full manual at youfixthis.com

PREVIEW ONLY

You're viewing 25 of 567 pages

The full manual includes:

- All 567 pages, complete
- Searchable PDF (find any keyword)
- No watermarks
- Instant download
- Print-ready quality

GET FULL MANUAL NOW

Daewoo Solar 250LC-V Shop Manual

Scan or click anywhere
youfixthis.com

Click anywhere on this page to get the full manual