GENERAL SPECIFICATIONS

Shipping Weight	24.6 metric tons (54,200 lb), includes 10% fuel, 5,900 mm (19' 4"), boom, 3,000 mm (9' 10") arm, 1,260 mm (4' 2") backhoe bucket and standard shoes
Operating Weight	Add weight of full fuel tank and operator.
Shipping Weights With Optional Track Shoes	Add 300 kg (660 lb) for 700 mm (28") shoes
	Add 600 kg (1,320 lb) for 800 mm (32") shoes
	Add 900 kg (1,980 lb) for 900 mm (35") shoes
Major Component Weights - 5,900 mm (19' 4")	Boom 1,620 kg (3,570 lb)
	2,500 mm (8' 2") Arm 700 kg (1,540 lb)
	3,000 mm (9' 10") Arm 760 kg (1,680 lb)
	3,500 mm (11' 6") Arm 850 kg (1,870 lb)
	Boom Cylinders 195 kg (430 lb) each
	Arm Cylinder 290 kg (640 lb)
	Bucket Cylinder 190 kg (420 lb)
	Counterweight 4,500 kg (9,920 lb)
	Upper Turntable 6,330 kg (13,960 lb)
	Lower - below Swing Bearing 9,190 kg (20,260 lb)
Digging Forces (SAE):	
Bucket Cylinder	149 KN or 15,200 kg (33,500 lb) - (with standard boom and arm)
Arm Cylinder	116 KN or 11,800 kg (26,000 lb) with standard boom and arm
Fuel Tank Capacity	370 liters (98 U.S. gal)
Hydraulic System Capacity	290 liters (77 U.S. gal)
Hydraulic Reservoir Capacity (Level)	155 liters (41 U.S. gal)
Bucket Heaped Capacity Range	SAE 0.5 - 1.29 m^3 (1.06 - 1.69 yd^3)
	IMPORTANT: Refer to the Load Weight, Bucket and Arm Length Compatibility Table for information on which bucket sizes may be used safely with which arm length, for load material weights.
Shoe Type	Triple Grouser
Shoe Width and Optional Sizes	600 mm (23.5") - standard
	700 mm (28") - optional
	800 mm (32") - optional
	900 mm (35") - optional
Ground Pressure Ratings:	
- Standard 600 mm (23.6") shoe	0.49 kg/cm^2 (7.0 psi)
- Optional 700 mm (28.0") shoe	0.43 kg/cm^2 (6.1 psi)
- Optional 800 mm (32.0") shoe	0.38 kg/cm^2 (5.4 psi)
- Optional 900 mm (35.0") shoe	0.34 kg/cm^2 (4.8 psi)
Transport Dimensions	

PREVIEW - YOUFIXTHIS.COM

Download full manual at youfixthis.com

DAEWOO
DAEWOO HEAVY INDUSTRIES & MACHINERY LTD.

GENERAL MAINTENANCE PROCEDURES

⚠ CAUTION!

Follow all safety recommendations and safe shop practices outlined in the front of this manual or those contained within this section.

Always use tools and equipment that is in good working order.

Use lifting and hoisting equipment capable of safely handling load.

Remember, that ultimately safety is your own personal responsibility.

MODEL	SERIAL NUMBER RANGE
ALL MODELS	ALL RANGES

PREVIEW - YOUFIXTHIS.COM

Copyright 2002 Daewoo

May 2002

Download full manual at youfixthis.com

TORQUE VALUES FOR STANDARD METRIC FASTENERS

NOTE: *The units for the torque values are kg•m (ft lb).*

Dia. x Pitch (mm)	Grade										
	3.6 (4A)	4.6 (4D)	4.8 (4S)	5.6 (5D)	5.8 (5S)	6.6 (6D)	6.8 (6S)	6.9 (6G)	8.8 (8G)	10.9 (10K)	12.9 (12K)
M5 x Std.	0.15 (1.08)	0.16 (1.15)	0.25 (1.80)	0.22 (1.59)	0.31 (2.24)	0.28 (2.02)	0.43 (3.11)	0.48 (3.47)	0.50 (3.61)	0.75 (5.42)	0.90 (6.50)
M6 x Std.	0.28 (2.02)	0.30 (2.16)	0.45 (3.25)	0.40 (2.89)	0.55 (3.97)	0.47 (3.39)	0.77 (5.56)	0.85 (6.14)	0.90 (6.50)	1.25 (9.04)	1.50 (10.84)
M7 x Std.	0.43 (3.11)	0.46 (3.32)	0.70 (5.06)	0.63 (4.55)	0.83 (6.00)	0.78 (5.64)	1.20 (8.67)	1.30 (9.40)	1.40 (10.12)	1.95 (14.10)	2.35 (16.99)
M8 x Std.	0.70 (5.06)	0.75 (5.42)	1.10 (7.95)	1.00 (7.23)	1.40 (10.12)	1.25 (9.04)	1.90 (13.74)	2.10 (15.18)	2.20 (15.91)	3.10 (22.42)	3.80 (27.48)
M8 x 1	0.73 (5.28)	0.80 (5.78)	1.20 (8.67)	1.00 (7.23)	1.50 (10.84)	1.35 (9.76)	2.10 (15.18)	2.30 (16.63)	2.40 (17.35)	3.35 (24.23)	4.10 (29.65)
M10 x Std.	1.35 (9.76)	1.40 (10.12)	2.20 (15.91)	1.90 (13.74)	2.70 (19.52)	2.35 (19.99)	3.70 (26.76)	4.20 (30.37)	4.40 (31.18)	6.20 (44.84)	7.20 (52.07)
M10 x 1	1.50 (10.84)	1.60 (11.57)	2.50 (18.08)	2.10 (15.18)	3.10 (22.42)	2.80 (20.25)	4.30 (31.10)	4.90 (35.44)	5.00 (36.16)	7.00 (50.63)	8.40 (60.75)
M12 x Std.	2.40 (17.35)	2.50 (18.08)	3.70 (26.76)	3.30 (23.86)	4.70 (33.99)	4.20 (30.37)	6.30 (45.56)	7.20 (52.07)	7.50 (54.24)	10.50 (75.94)	12.50 (90.41)
M12 x 1.5	2.55 (18.44)	2.70 (19.52)	4.00 (28.93)	3.50 (25.31)	5.00 (36.16)	4.50 (32.54)	6.80 (49.18)	7.70 (55.69)	8.00 (57.86)	11.20 (81.00)	13.40 (96.92)
M14 x Std.	3.70 (26.76)	3.90 (28.20)	6.00 (13.23)	5.20 (37.61)	7.50 (54.24)	7.00 (50.63)	10.00 (72.33)	11.50 (83.17)	12.00 (86.79)	17.00 (122.96)	20.00 (144.66)
M14 x 1.5	4.10 (29.65)	4.30 (31.10)	6.60 (47.73)	5.70 (41.22)	8.30 (60.03)	7.50 (54.24)	11.10 (80.28)	12.50 (90.41)	13.00 (94.02)	18.50 (11.26)	22.00 (158.12)
M16 x Std.	5.60 (40.50)	6.00 (43.39)	9.00 (65.09)	8.00 (57.86)	11.50 (83.17)	10.50 (75.94)	15.50 (112.11)	17.90 (129.47)	18.50 (133.81)	26.00 (188.05)	31.00 (224.22)
M16 x 1.5	6.20 (44.84)	6.50 (47.01)	9.70 (70.16)	8.60 (62.20)	12.50 (90.41)	11.30 (81.73)	17.00 (122.96)	19.50 (141.04)	20.00 (144.66)	28.00 (202.52)	35.50 (256.77)
M18 x Std.	7.80 (56.41)	8.30 (60.03)	12.50 (90.41)	11.00 (79.56)	16.00 (115.72)	14.50 (104.87)	21.00 (151.89)	27.50 (198.90)	28.50 (206.14)	41.00 (296.55)	43.00 (311.01)
M18 x 1.5	9.10 (65.82)	9.50 (68.71)	14.40 (104.15)	12.50 (90.41)	18.50 (133.81)	16.70 (120.79)	24.50 (177.20)	27.50 (198.90)	28.50 (206.14)	41.00 (296.55)	49.00 (354.41)
M20 x Std.	11.50 (83.17)	12.00 (86.79)	18.00 (130.19)	16.00 (115.72)	22.00 (159.12)	19.00 (137.42)	31.50 (227.83)	35.00 (253.15)	36.00 (260.38)	51.00 (368.88)	60.00 (433.98)
M20 x 1.5	12.80 (92.58)	13.50 (97.64)	20.50 (148.27)	18.00 (130.19)	25.00 (180.82)	22.50 (162.74)	35.00 (253.15)	39.50 (285.70)	41.00 (296.55)	58.00 (419.51)	68.00 (491.84)
M22 x Std.	15.50 (112.11)	16.00 (115.72)	24.50 (177.20)	21.00 (151.89)	30.00 (216.99)	26.00 (188.05)	42.00 (303.78)	46.00 (332.71)	49.00 (354.41)	67.00 (484.61)	75.00 (542.47)
M22 x 1.5	17.00 (122.96)	18.50 (133.81)	28.00 (202.52)	24.00 (173.59)	34.00 (245.92)	29.00 (209.75)	47.00 (339.95)	52.00 (44.76)	56.00 (405.04)	75.00 (542.47)	85.00 (614.80)
M24 x Std.	20.50 (148.27)	21.50 (155.50)	33.00 (238.68)	27.00 (195.29)	40.00 (289.32)	34.00 (245.92)	55.00 (397.81)	58.00 (419.51)	63.00 (455.67)	82.00 (593.10)	92.00 (655.43)
M24 x 1.5	23.00 (166.35)	35.00 (253.15)	37.00 (267.62)	31.00 (224.22)	45.00 (325.48)	38.00 (202.52)	61.00 (441.21)	67.00 (484.61)	74.00 (535.24)	93.00 (672.66)	103.00 (744.99)

PREVIEW - YOUFIXTHIS.COM

Download full manual at youfixthis.com

GENERAL DESCRIPTION

Schematic(s) presented in this section are laid out on facing pages.

An overlapping edge has been taken into consideration so that a photocopy can be made and pasted together to make a complete schematic.

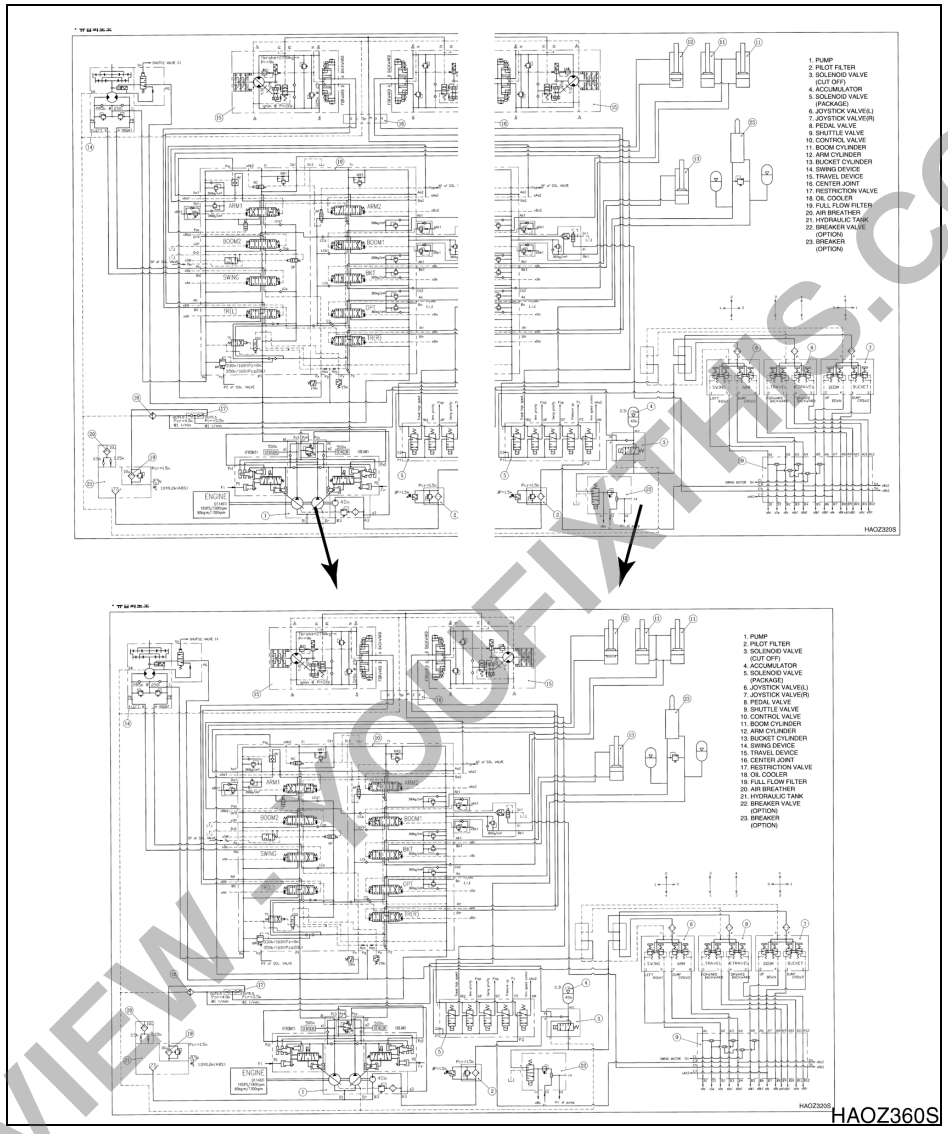

Figure 1

PREVIEW - YOUFIXTHIS.COM

Download full manual at youfixthis.com

GENERAL DESCRIPTION

Schematic(s) presented in this section are laid out on facing pages.

An overlapping edge has been taken into consideration so that a photocopy can be made and pasted together to make a complete schematic.

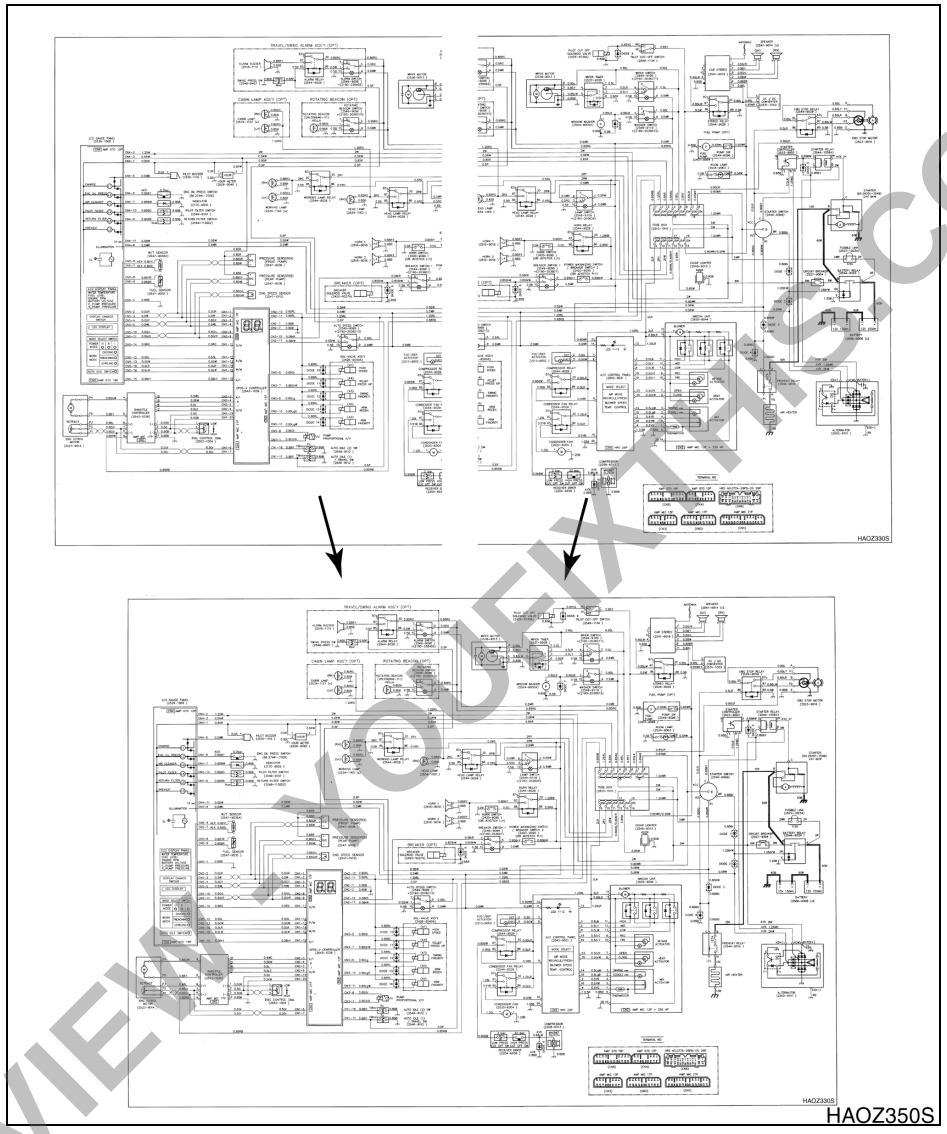

Figure 1

PREVIEW - YOUFIXTHIS.COM

Download full manual at youfixthis.com

TABLE OF CONTENTS

Safety

Track Excavator Safety.....S0102000

Specifications

Specifications for Solar 255LC-V..... S0205025K

General Maintenance

General Maintenance Procedures.....S0302000

Standard Torques.....S0309000

Upper Structure

Cab..... S0402040K

Counterweight..... S0403050K

Fuel Tank..... S0405025K

Fuel Transfer Pump.....S0405500

Swing Bearing.....S0407000

Swing Reduction Gearbox..... S0408005K

Lower Structure and Chassis

Track Assembly.....S0505100

Engine and Drive Train

Air-Conditioner..... S0605060K

Drive Coupling (Main Pump).....S0609000

Hydraulics

Hydraulic System Troubleshooting, Testing and Adjustment S0702170K

Accumulator..... S0703010K

Center Joint (Swivel).....S0704010

Cylinders.....S0705000

PREVIEW - YOUFIXTHIS.COM

Download full manual at youfixthis.com

DAEWOO
DAEWOO HEAVY INDUSTRIES & MACHINERY LTD.

TRACK EXCAVATOR SAFETY

⚠ CAUTION!

Follow all safety recommendations and safe shop practices outlined in the front of this manual or those contained within this section.

Always use tools and equipment that is in good working order.

Use lifting and hoisting equipment capable of safely handling load.

Remember, that ultimately safety is your own personal responsibility.

MODEL	SERIAL NUMBER RANGE
Solar 130LC-V	0001 and Up
Solar 170LC-V	1001 and Up
Solar 220LC-V	0001 and Up
Solar 220N-V	1001 and Up
Solar 225LC-V	1001 and Up
Solar 225NLC-V	1001 and Up
Solar 250LC-V	1001 and Up
Solar 255LC-V	1001 and Up
Solar 290LC-V	0001 and Up
Solar 300LC-V	1001 and Up
Solar 300LL	1001 and Up
Solar 330LC-V	1001 and Up
Solar 340LC-V	1001 and Up
Solar 400LC-V	1001 and Up
Solar 420LC-V	1001 and Up
Solar 450LC-V	1001 and Up
Solar 470LC-V	1001 and Up

PREVIEW - YOUFIXTHIS.COM

Copyright 2002 Daewoo

November 2002

Download full manual at youfixthis.com

PREVIEW - YOUFIXTHIS.COM

Download full manual at youfixthis.com

ACTION WHEN ABNORMALLY IS FOUND DURING INSPECTION

If any abnormality is found during inspection, always carry out repairs. In particular, if the machine is used when there are still problems with the brake or work equipment systems, it may lead to serious injury.

If necessary depending on the type of failure, please contact your Daewoo distributor for repairs.

PRECAUTIONS WITH HIGH PRESSURE LINE, TUBES AND HOSES

When inspecting or replacing high-pressure piping or hoses, check that the pressure has been released from the circuit. Failure to release the pressure may lead to serious injury. Always do the following;

- Wear protective glasses and leather gloves.
- Fluid leaks from hydraulic hoses or pressurized components can be difficult to see but pressurized oil has enough force to pierce the skin and cause serious injury. Always use a piece of wood or cardboard to check for suspected hydraulic leaks. Never use your hands or expose your fingers.
- Do not bend high pressure lines. Do not strike high pressure lines. Do not install lines, tubes or hoses that are bent or damaged.
- Make sure that all clamps, guards and heat shields are installed correctly to prevent vibration, rubbing against other parts, and excessive heat during operation.
  - If any of the following conditions are found, replace the part.
  - Damage or leakage from hose end.
  - Wear, damage, cutting of covering, or exposure of strengthening wire layer.
  - Cover portion is swollen in places.
  - There is twisting or crushing at movable parts of hose.
  - Foreign material is embedded in the covering.
  - Hose end is deformed.

NOTE: *Refer to "Hose In-service Lifetime Limit (European Standard ISO 8331 and EN982 CEN)" in the Operation and Maintenance Manual, for additional European regulations.*

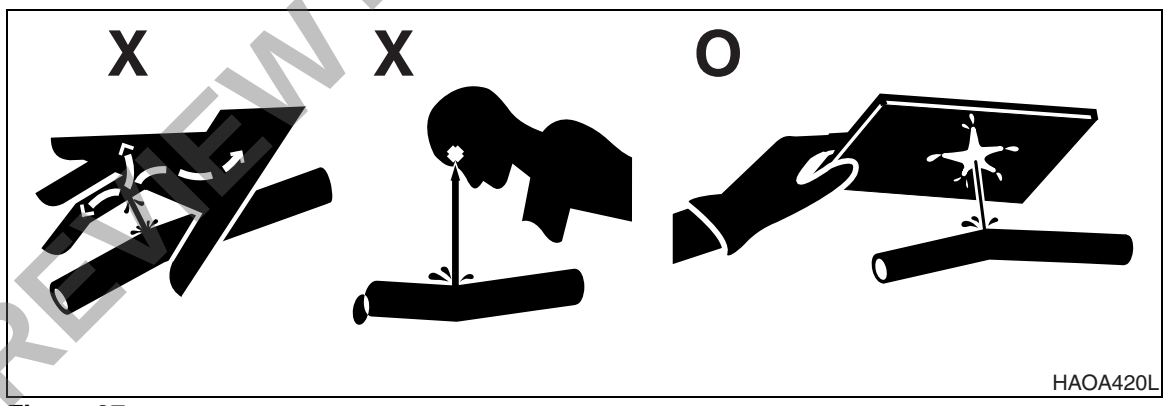

Figure 37

PREVIEW - YOUFIXTHIS.COM

Download full manual at youfixthis.com

IMPORTANT

Hydraulic system operating conditions (repetitive cycling, heavy work loads, fluid circulating under high pressure) make it extremely critical that dust, grit or any other type of contamination be kept out of the system. Observe fluid and filter change maintenance interval recommendations and always pre-clean any exterior surface of the system before it is exposed to air. For example, the reservoir filler cap and neck area, hoses that have to be disassembled, and the covers and external surfaces of filter canisters should all be cleaned before disassembly.

MAINTENANCE SERVICE AND REPAIR PROCEDURE

GENERAL PRECAUTIONS

Fluid level and condition should always be checked whenever any other type of maintenance service or repair is being performed.

NOTE: *If the unit is being used in an extreme temperature environment (in sub-freezing climates or in high temperature, high humidity tropical conditions), frequent purging of moisture condensation from the hydraulic reservoir drain tap should be a regular and frequent part of the operating routine. In more moderate, temperate climates, draining reservoir sediment and moisture may not be required more than once or twice every few months.*

Inspect drained oil and used filters for signs of abnormal coloring or visible fluid contamination at every oil change. Abrasive grit or dust particles will cause discoloration and darkening of the fluid. Visible accumulations of dirt or grit could be an indication that filter elements are overloaded (and will require more frequent replacement) or that disintegrating bearings or other component failures in the hydraulic circuit may be imminent or have already occurred. Open the drain plugs on the main pump casings and check and compare drain oil in the pumps. Look for evidence of grit or metallic particles.

Vibration or unusual noise during operation could be an indication of air leaking into the circuit (Refer to the appropriate Troubleshooting section for component or unit for procedures.), or it may be evidence of a defective pump. The gear-type pilot pump could be defective, causing low pilot pressure, or a main pump broken shoe or piston could be responsible.

NOTE: *If equipped, indicated operating pressure, as shown on the multidisplay digital gauge on the Instrument Panel ("F-Pump" and "R-Pump") will be reduced as a result of a mechanical problem inside the pump. However, pressure loss could also be due to cavitation or air leakage, or other faults in the hydraulic system.*

Check the exterior case drain oil in the main pumps. If no metallic particles are found, make sure there is no air in the system. Unbolt and remove the tank return drain line from the top part of the swing motor, both travel motors and each main pump. If there is air in any one of the drain lines, carefully pre-fill the assembly before bolting together the drain line piping connections. Run the system at low rpm.

PREVIEW - YOUFIXTHIS.COM

Download full manual at youfixthis.com

12. Remove two caps (1, Figure 4) from counterweight (2).

13. Install two lifting eyes in lifting holes (3, Figure 4).

Model	Lifting Eye Size
Solar 225LC-V Solar 225NLC-V Solar 255LC-V Solar 300LC-V Solar 300LL Solar 340LC-V Solar 420LC-V Solar 470LC-V	M48x5.0

14. Using a suitable lifting device capable of handling load, partially support counterweight (2, Figure 4) before beginning to loosen four bolts (4). Stop lifting with assist crane as soon as lifting slings are taut.

15. Remove four bolts (4, Figure 4) and washers/spacers (5) from counterweight (2).

    NOTE: *Heat bolts if necessary, to free them.*

16. When bolts (4, Figure 4) and washers/spacers (5) have been removed, lift counterweight (2) a very short distance above support frame (6) and stop. Check slings and make sure counterweight is being supported evenly.

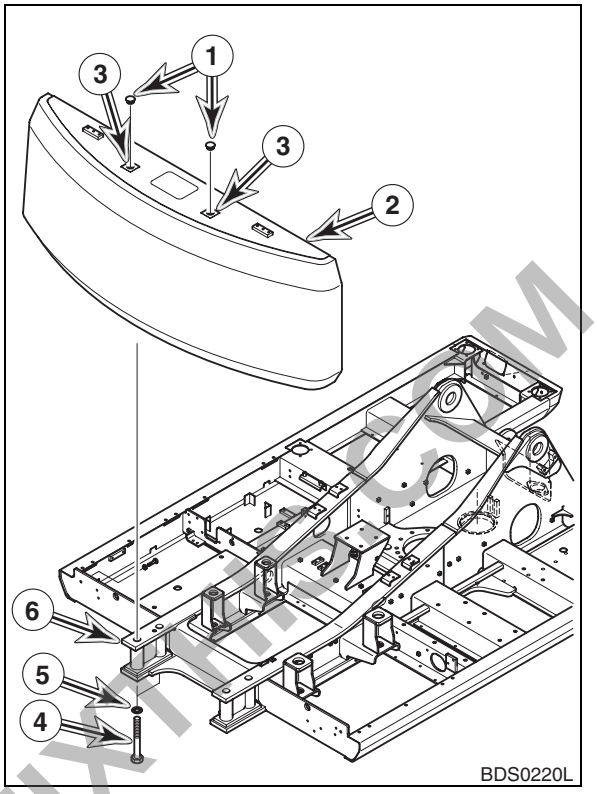

Figure 4

PREVIEW - YOUFIXTHIS.COM

Download full manual at youfixthis.com

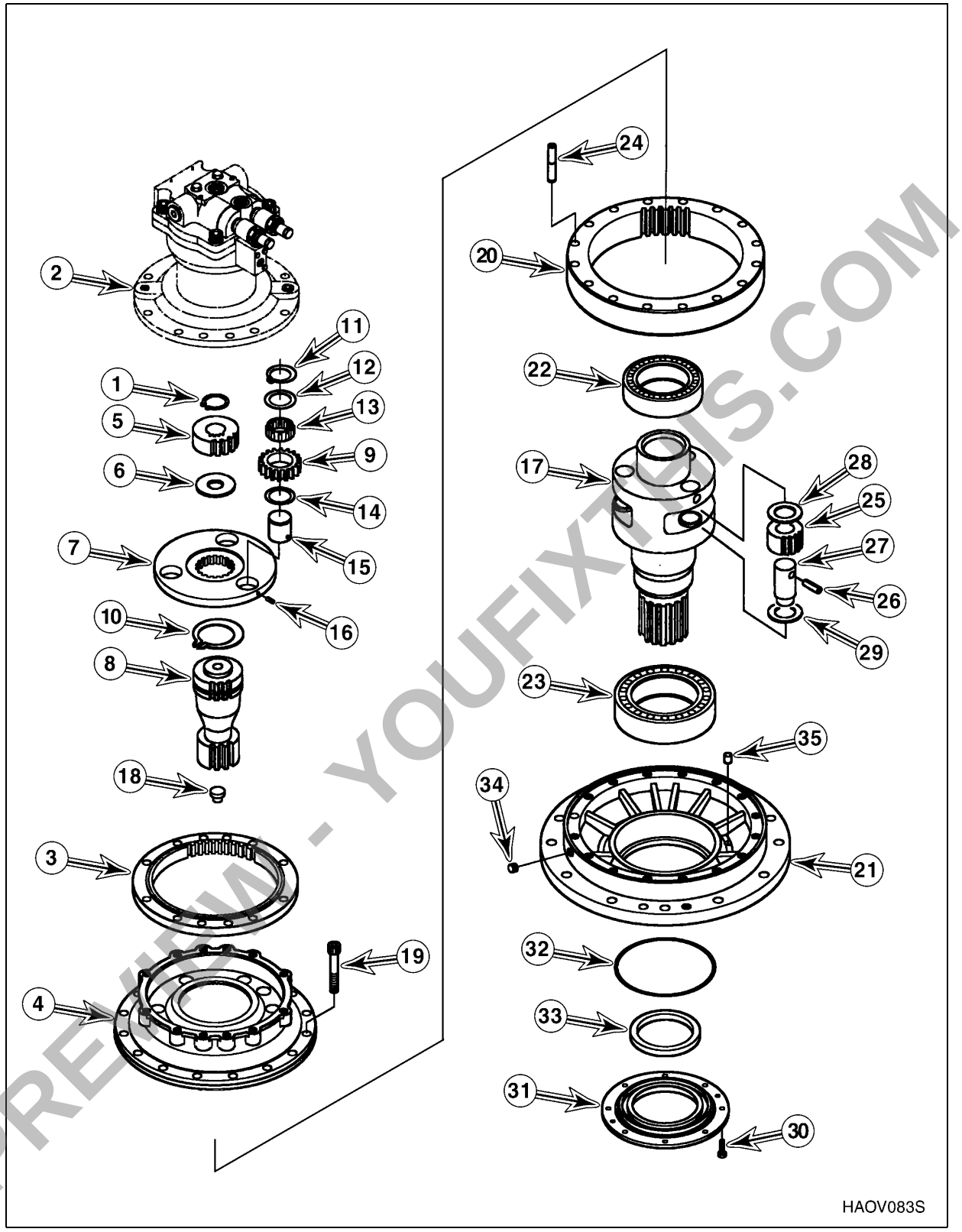

Figure 5

7. Stop ring (1, Figure 5) will remain on swing motor (2) shaft. Remove stop ring only if replacement is necessary.

PREVIEW - YOUFIXTHIS.COM
Download full manual at youfixthis.com

Reference Number	Description
1	Body
2	Bar Tie
3	Spring
4	Bracket
5	Lock Nut
6	Lock Plate
7	Bolt
8	Spring Washer
9	Rod Seal

Reference Number	Description
10	Backup Ring
11	Dust Seal
12	Rod Assembly
13	Spring Washer
14	Bolt
15	Adapter
16	Grease Valve
17	Seal Ring

PREVIEW - YOUFIXTHIS.COM

Download full manual at youfixthis.com

DRIVE COUPLING INSTALLATION

Whenever the drive coupling for main pump is installed, the following mounting dimensions and installation procedures must be observed.

NOTE: *If these procedures are not followed, noise will occur and/or the service life of drive coupling or main pump will be reduced.*

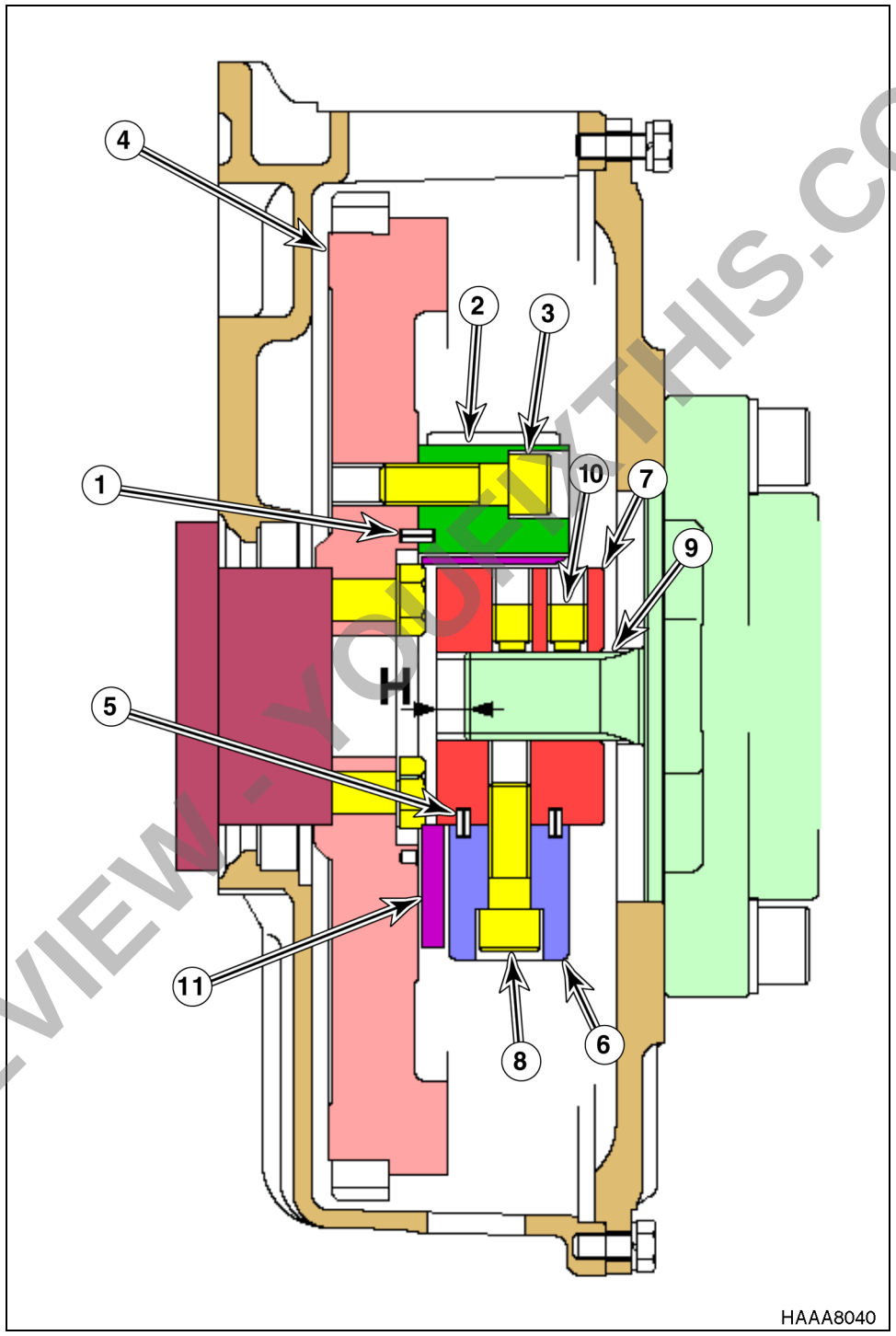

Figure 9 DRIVE COUPLING INSTALLATION (KAWASAKI / TONG MYUNG PUMP)

PREVIEW - YOUFIXTHIS.COM

Download full manual at youfixthis.com

Problem	Possible Causes	Remedies
No rotation and:		
Pressure at swing motor inlet increases.	Swing brake not releasing.	Check brake engagement and disengagement; check release pressure.
	Internal damage to gearbox drive train.	Replace broken gears and drive train assemblies.
	Overload.	Reduce load weight.
Pressure at swing motor inlet shows no increase, and the swing motor is making irregular noises.	Swing motor drive shaft damage.	Replace swing motor.
	Internal damage to gearbox drive train.	Repair/Replace broken or faulty assemblies.
Pressure at swing motor inlet shown no increase, but without irregular noises from the swing motor.	Hydraulic pump or valve problem.	Troubleshoot hydraulic system.
Oil Leakage:		
From drive shaft From bolted connections or other assembled surfaces.	Oil seal damaged Assembly compound (joint sealer) old and not sealing, bolt not tight or flange warped.	Replace oil seal Disassemble and check mating surfaces. Reapply Loctite; torque bolts to specifications.
Excess heat:		
Gearbox casing becomes excessively hot, with or without irregular noise (s), during operation.	Low oil level.	Replace oil; refill to specified level.
	Bearings or gears worn but not completely inoperative.	Repair or replace gearbox.

PREVIEW - YOUFIXTHIS.COM

Download full manual at youfixthis.com

PREVIEW - YOUFIXTHIS.COM

Download full manual at youfixthis.com

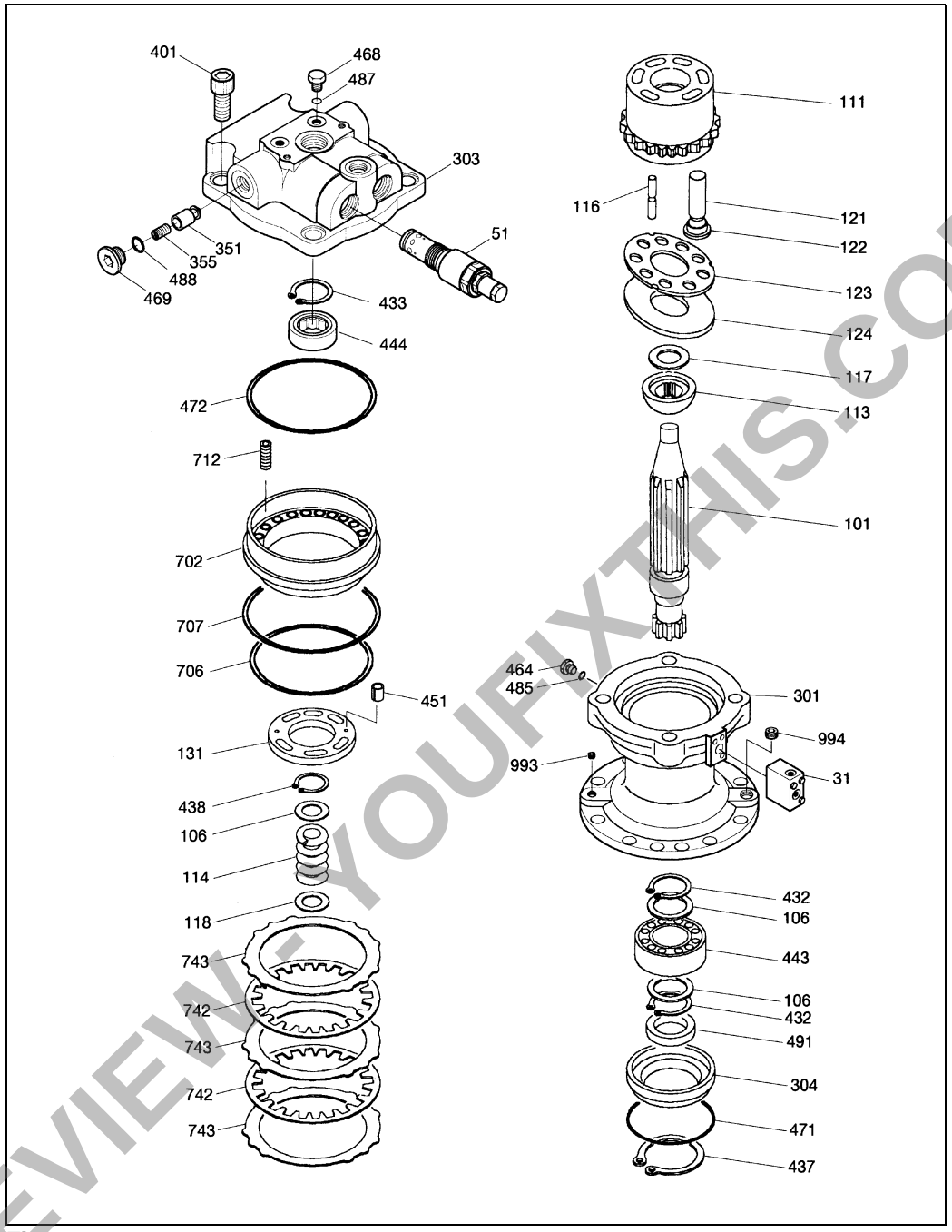

Figure 5

PREVIEW - YOUFIXTHIS.COM

Download full manual at youfixthis.com

3) Stopping operation (See Figure 15)

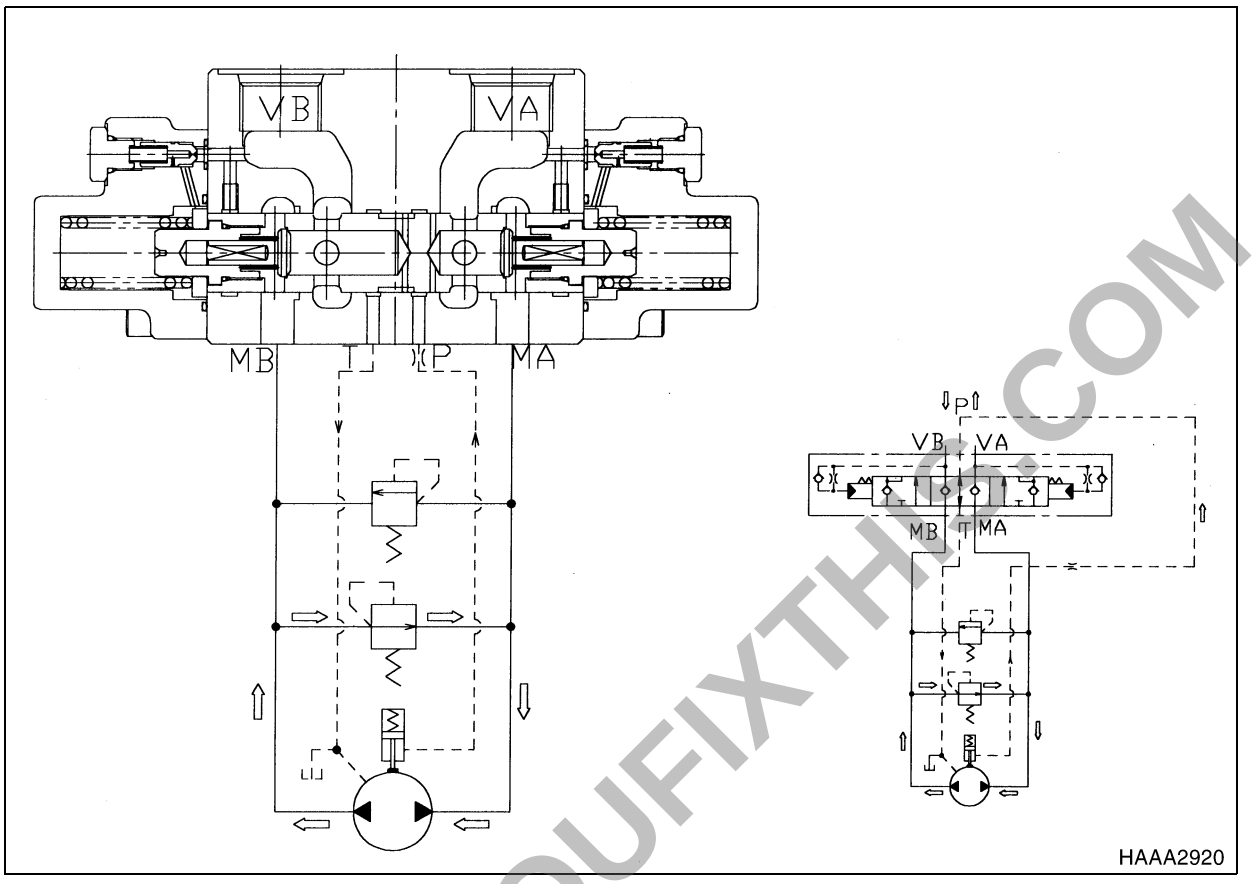

Figure 15 STOPPING POSITION

Returning the control valve to neutral position while running the motor, the oil supply is cut off and VA and VB ports are connected to the tank line. Then the pressure of the pilot chamber on both spool ends become equal, and the spool returns to the neutral position by spring force. Thus, the passage from MA to VA is closed.

Owing to the inertia force of the load, the hydraulic motor tends to continue the rotation. Here, the motor functions as a pump and forwards the oil to MB port but the passage is blocked and MB port pressure increases. Then the relief valve opens to relieve the pressure and rotational speed decelerates and at last the motor stops. Negative brake release pressure is gradually lowered due to the restrictor and finally the brake works and the motor is mechanically stopped.

PREVIEW - YOUFIXTHIS.COM

Download full manual at youfixthis.com

⚠ CAUTION!

Confirm that O-ring of floating seal (23, Figure 4) are not twisted and that floating seal is correctly installed. i.e. parallel as shown each other between housing (18) and motor casing after assembled. (See Figure 67 and Figure 68.)

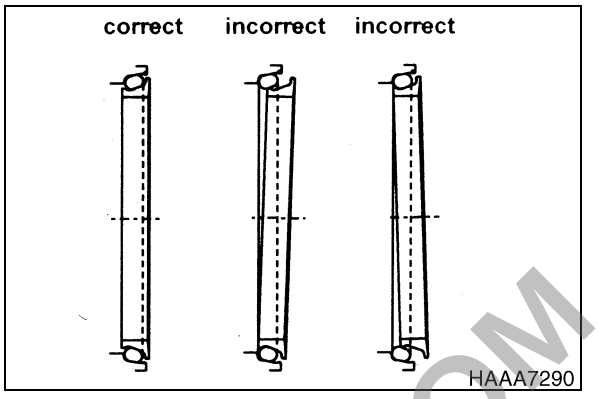

Figure 68

5. Determining shim thickness for angular bearings.

   NOTE: *This work should be done only when you have changed motor (casing), housing (18, Figure 4), bearing (19) or lock washer (21). Unless otherwise use the same shim as before.*

   A. Evenly pressing on inner races of two bearings (19, Figure 4), measure the assembly width (A) of inner races.

   B. Measure motor side assembly width (B) for bearings (19, Figure 4).

   C. Measure width of groove (C) on motor.

   D. Measure thickness (D) of lock washer (21, Figure 4).

   NOTE: *Take measurements (A thru D) at four places 90° apart from each other. Then average the values.*

   E. When thickness of shim (20, Figure 4) to be used is placed as "S," the clearance "X" can be calculated as follows: X = (B+C) - (A+D+S).

   F. Select a shim (20, Figure 4) so as the clearance "X" will be -0.080 mm (0.003 in) (interference) to +0.020 mm (0.001 in) (clearance) on this unit.

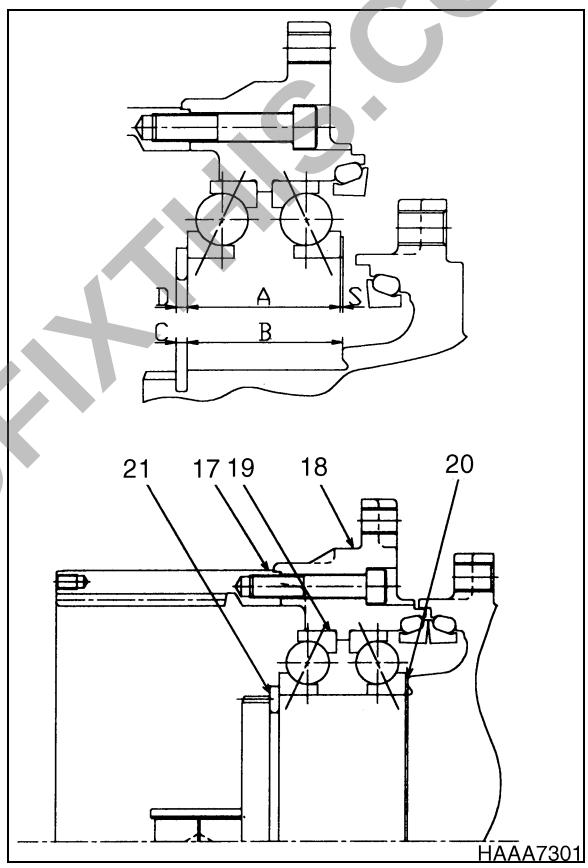

Figure 69

PREVIEW - YOUFIXTHIS.COM

Download full manual at youfixthis.com

5. Attach feedback lever (611) to spool (652) using pin (874).

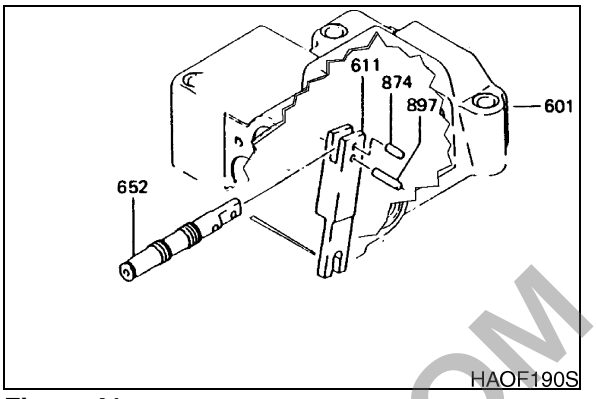

Figure 41

NOTE: *The notched portion of spool should face down when mated into feedback lever for correct pin alignment.(Figure 42)*

1, 2 - Feedback lever (611)

3 - Spool (652)

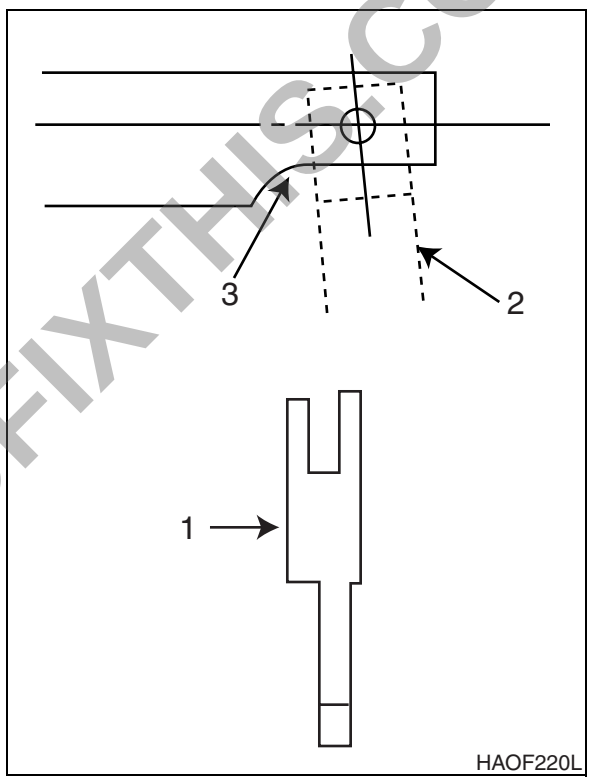

Figure 42

6. Insert pilot piston (643) into bore.

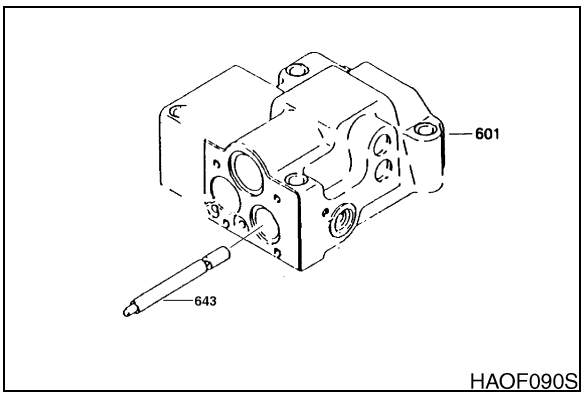

Figure 43

PREVIEW - YOUFIXTHIS.COM

Download full manual at youfixthis.com

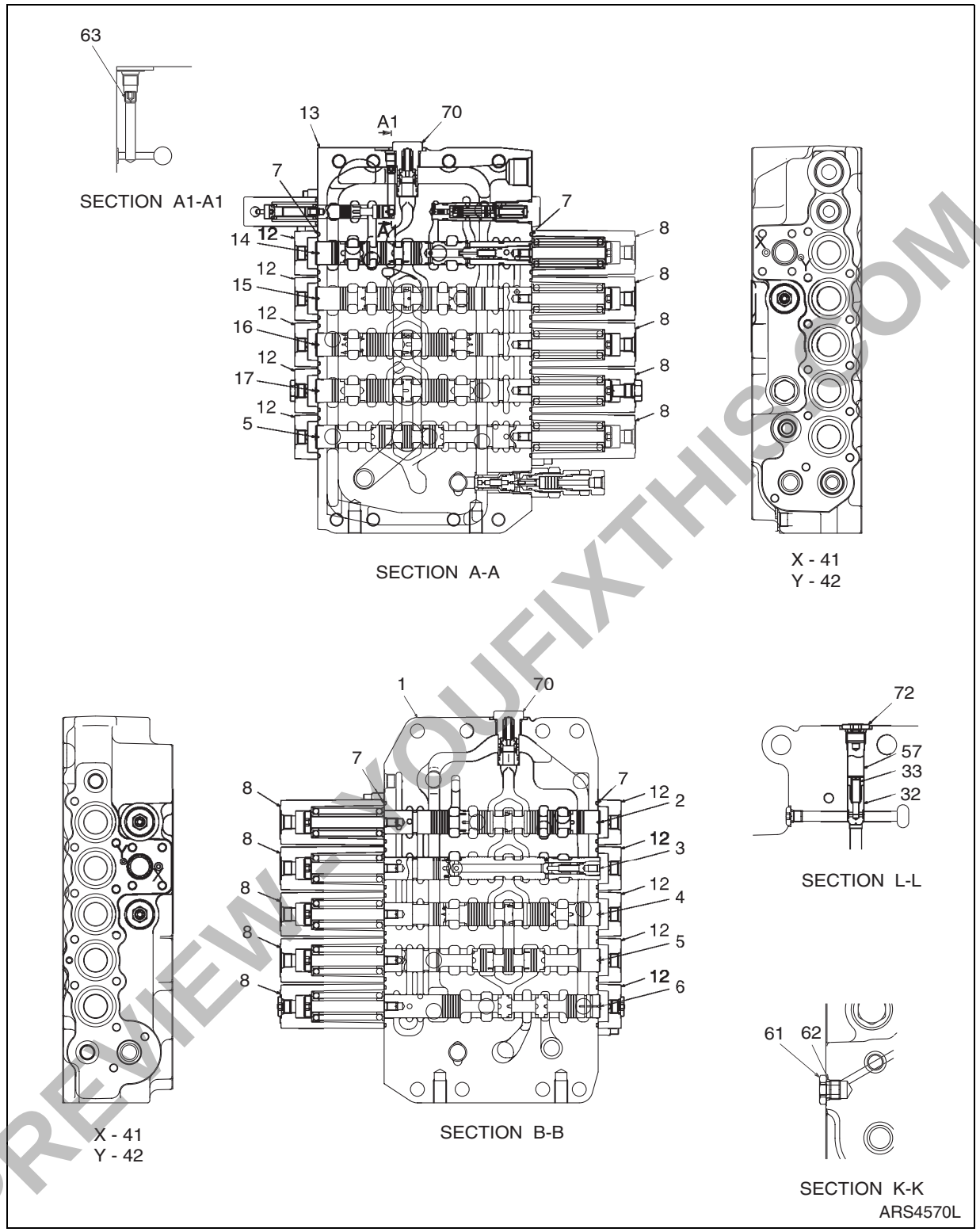

Figure 33

PREVIEW - YOUFIXTHIS.COM

Download full manual at youfixthis.com

3. Remove hex nut (25) and swash plate (24).

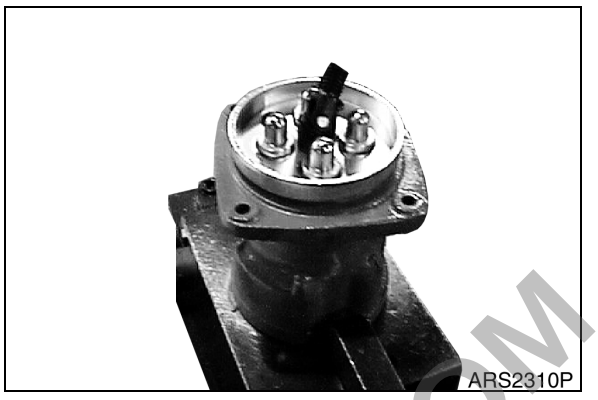

Figure 11

4. Remove joint (23) from case (1).

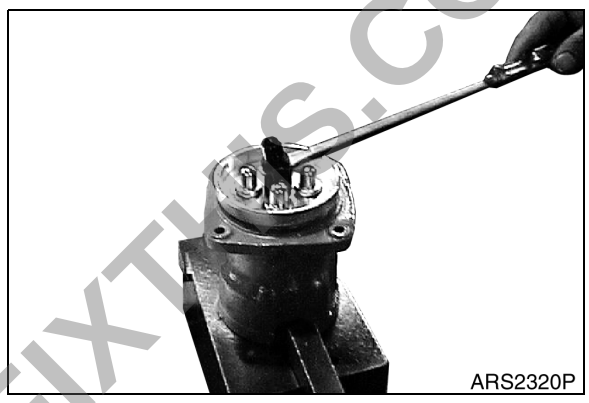

Figure 12

5. Remove plate (21).

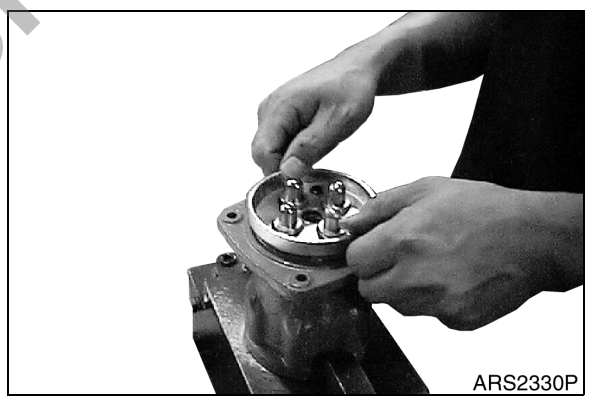

Figure 13

6. Press spring (10) and remove plug (18).

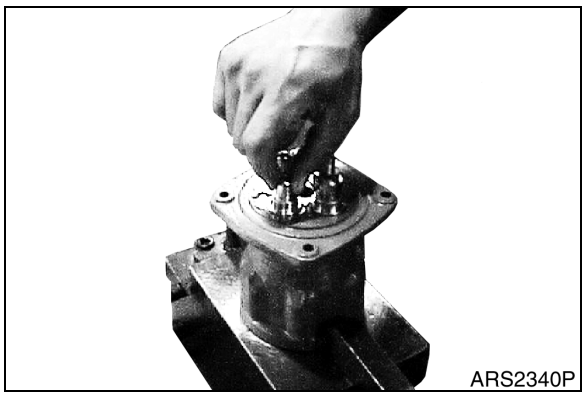

Figure 14

PREVIEW - YOUFIXTHIS.COM

Download full manual at youfixthis.com

TABLE OF CONTENTS

General Description..... 3
Solar 255LC-V..... 4

PREVIEW - YOUFIXTHIS.COM

Download full manual at youfixthis.com

Display Example: Machine Status Information

1. EPPR Valve Current

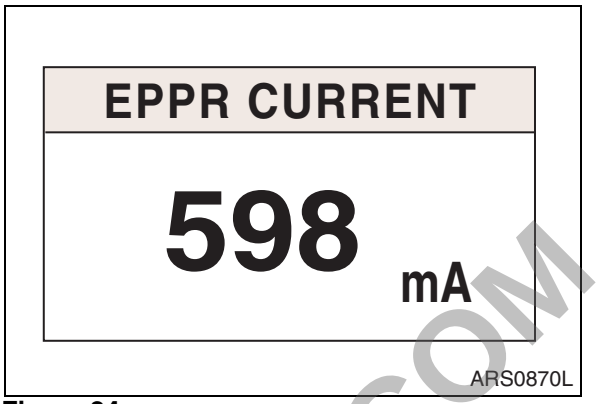

Figure 24

2. Dial Voltage

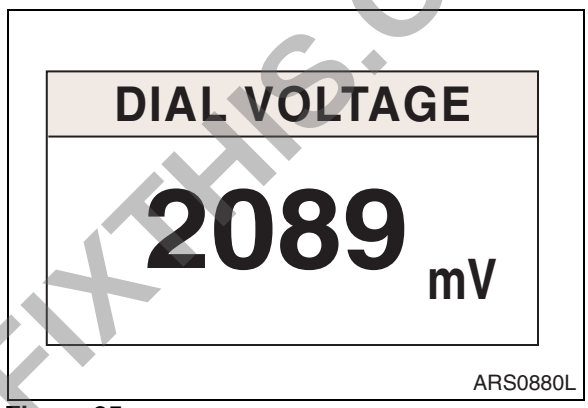

Figure 25

3. TPS Voltage

   Output voltage of potentiometer built into engine control motor.

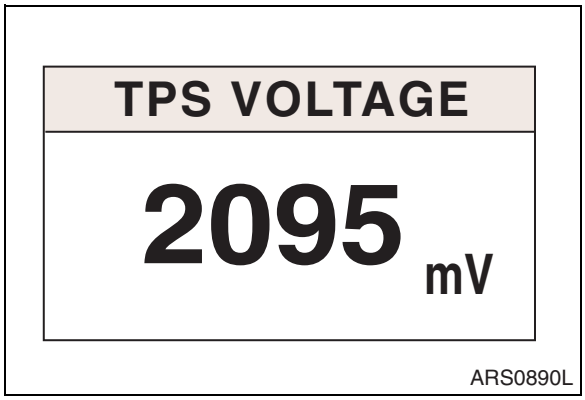

Figure 26

PREVIEW - YOUFIXTHIS.COM

Download full manual at youfixthis.com

SELF-DIAGNOSTIC FUNCTION

E-EPOS CONTROLLER

The system operation status and malfunction codes can be checked through the display on top of the e-EPOS controller box in the drawer under the operator's seat.

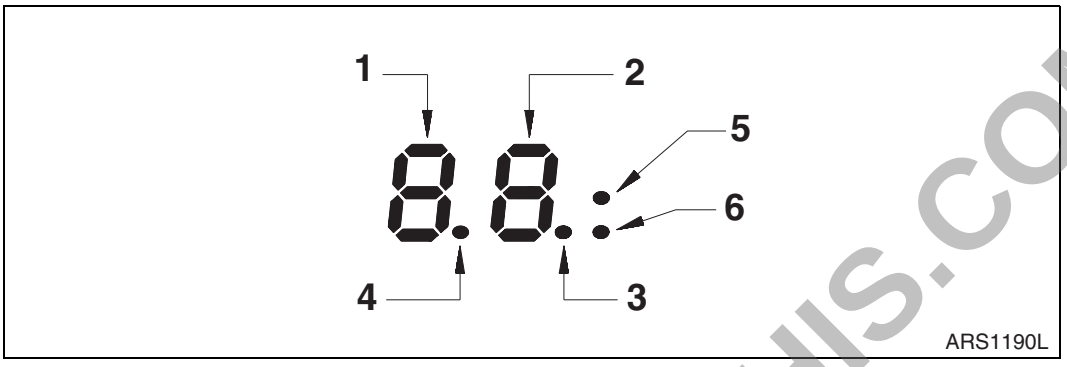

Figure 66

Reference Number	Description
1	Upper Digit
2	Lower Digit
3	Engine Speed Monitor LED (Flash Interval Increases With Engine Speed.)

Reference Number	Description
4	Power Monitor (Stays On While Power Is In Normal Range,)
5	Communication Monitor LED (Flash when normal condition)
6	

1. Power Monitor

This LED is turned off when the input voltage to the e-EPOS controller is below 18.5 ±1 V or above 32.5 ±1 V. Stays on while in normal range.

2. Engine Speed Monitor

This LED light flashes according to the engine speed. The flashing interval is proportional to the engine speed.

3. Communication Monitor

These LED lamps flash when normal state of communication between main controller and instrument panel.

PREVIEW - YOUFIXTHIS.COM

Download full manual at youfixthis.com

PREVIEW ONLY

You're viewing 25 of 668 pages

The full manual includes:

- All 668 pages, complete
- Searchable PDF (find any keyword)
- No watermarks
- Instant download
- Print-ready quality

GET FULL MANUAL NOW

Daewoo Solar 255LC-V Shop Manual

Scan or click anywhere
youfixthis.com

Click anywhere on this page to get the full manual