SPECIFICATIONS FOR SOLAR 290LC-V

⚠ CAUTION!

Follow all safety recommendations and safe shop practices outlined in the front of this manual or those contained within this section.

Always use tools and equipment that is in good working order.

Use lifting and hoisting equipment capable of safely handling load.

Remember, that ultimately safety is your own personal responsibility.

MODEL	SERIAL NUMBER RANGE
Solar 290LC-V	0001 and UP

PREVIEW - YOUFIXTHIS.COM

Copyright 1998 Daewoo

September 1998

Download full manual at youfixthis.com

GENERAL MAINTENANCE PROCEDURES

⚠ CAUTION!

Follow all safety recommendations and safe shop practices outlined in the front of this manual or those contained within this section.

Always use tools and equipment that is in good working order.

Use lifting and hoisting equipment capable of safely handling load.

Remember, that ultimately safety is your own personal responsibility.

MODEL	SERIAL NUMBER RANGE
ALL MODELS	ALL RANGES

PREVIEW - YOUFIXTHIS.COM

Copyright 1998 Daewoo

September 1998

Download full manual at youfixthis.com

TORQUE VALUES FOR STANDARD METRIC FASTENERS

NOTE: *The units for the torque values are kg•m (ft lbs)*

Dia. x Pitch (mm)	Grade										
	3.6 (4A)	4.6 (4D)	4.8 (4S)	5.6 (5D)	5.8 (5S)	6.6 (6D)	6.8 (6S)	6.9 (6G)	8.8 (8G)	10.9 (10K)	12.9 (12K)
M5 x Std.	0.15 (1.08)	0.16 (1.15)	0.25 (1.80)	0.22 (1.59)	0.31 (2.24)	0.28 (2.02)	0.43 (3.11)	0.48 (3.47)	0.50 (3.61)	0.75 (5.42)	0.90 (6.50)
M6 x Std.	0.28 (2.02)	0.30 (2.16)	0.45 (3.25)	0.40 (2.89)	0.55 (3.97)	0.47 (3.39)	0.77 (5.56)	0.85 (6.14)	0.90 (6.50)	1.25 (9.04)	1.50 (10.84)
M7 x Std.	0.43 (3.11)	0.46 (3.32)	0.70 (5.06)	0.63 (4.55)	0.83 (6.00)	0.78 (5.64)	1.20 (8.67)	1.30 (9.40)	1.40 (10.12)	1.95 (14.10)	2.35 (16.99)
M8 x Std.	0.70 (5.06)	0.75 (5.42)	1.10 (7.95)	1.00 (7.23)	1.40 (10.12)	1.25 (9.04)	1.90 (13.74)	2.10 (15.18)	2.20 (15.91)	3.10 (22.42)	3.80 (27.48)
M8 x 1	0.73 (5.28)	0.80 (5.78)	1.20 (8.67)	1.00 (7.23)	1.50 (10.84)	1.35 (9.76)	2.10 (15.18)	2.30 (16.63)	2.40 (17.35)	3.35 (24.23)	4.10 (29.65)
M10 x Std.	1.35 (9.76)	1.40 (10.12)	2.20 (15.91)	1.90 (13.74)	2.70 (19.52)	2.35 (19.99)	3.70 (26.76)	4.20 (30.37)	4.40 (31.18)	6.20 (44.84)	7.20 (52.07)
M10 x 1	1.50 (10.84)	1.60 (11.57)	2.50 (18.08)	2.10 (15.18)	3.10 (22.42)	2.80 (20.25)	4.30 (31.10)	4.90 (35.44)	5.00 (36.16)	7.00 (50.63)	8.40 (60.75)
M12 x Std.	2.40 (17.35)	2.50 (18.08)	3.70 (26.76)	3.30 (23.86)	4.70 (33.99)	4.20 (30.37)	6.30 (45.56)	7.20 (52.07)	7.50 (54.24)	10.50 (75.94)	12.50 (90.41)
M12 x 1.5	2.55 (18.44)	2.70 (19.52)	4.00 (28.93)	3.50 (25.31)	5.00 (36.16)	4.50 (32.54)	6.80 (49.18)	7.70 (55.69)	8.00 (57.86)	11.20 (81.00)	13.40 (96.92)
M14 x Std.	3.70 (26.76)	3.90 (28.20)	6.00 (13.23)	5.20 (37.61)	7.50 (54.24)	7.00 (50.63)	10.00 (72.33)	11.50 (83.17)	12.00 (86.79)	17.00 (122.96)	20.00 (144.66)
M14 x 1.5	4.10 (29.65)	4.30 (31.10)	6.60 (47.73)	5.70 (41.22)	8.30 (60.03)	7.50 (54.24)	11.10 (80.28)	12.50 (90.41)	13.00 (94.02)	18.50 (11.26)	22.00 (158.12)
M16 x Std.	5.60 (40.50)	6.00 (43.39)	9.00 (65.09)	8.00 (57.86)	11.50 (83.17)	10.50 (75.94)	15.50 (112.11)	17.90 (129.47)	18.50 (133.81)	26.00 (188.05)	31.00 (224.22)
M16 x 1.5	6.20 (44.84)	6.50 (47.01)	9.70 (70.16)	8.60 (62.20)	12.50 (90.41)	11.30 (81.73)	17.00 (122.96)	19.50 (141.04)	20.00 (144.66)	28.00 (202.52)	35.50 (256.77)
M18 x Std.	7.80 (56.41)	8.30 (60.03)	12.50 (90.41)	11.00 (79.56)	16.00 (115.72)	14.50 (104.87)	21.00 (151.89)	27.50 (198.90)	28.50 (206.14)	41.00 (296.55)	43.00 (311.01)
M18 x 1.5	9.10 (65.82)	9.50 (68.71)	14.40 (104.15)	12.50 (90.41)	18.50 (133.81)	16.70 (120.79)	24.50 (177.20)	27.50 (198.90)	28.50 (206.14)	41.00 (296.55)	49.00 (354.41)
M20 x Std.	11.50 (83.17)	12.00 (86.79)	18.00 (130.19)	16.00 (115.72)	22.00 (159.12)	19.00 (137.42)	31.50 (227.83)	35.00 (253.15)	36.00 (260.38)	51.00 (368.88)	60.00 (433.98)
M20 x 1.5	12.80 (92.58)	13.50 (97.64)	20.50 (148.27)	18.00 (130.19)	25.00 (180.82)	22.50 (162.74)	35.00 (253.15)	39.50 (285.70)	41.00 (296.55)	58.00 (419.51)	68.00 (491.84)
M22 x Std.	15.50 (112.11)	16.00 (115.72)	24.50 (177.20)	21.00 (151.89)	30.00 (216.99)	26.00 (188.05)	42.00 (303.78)	46.00 (332.71)	49.00 (354.41)	67.00 (484.61)	75.00 (542.47)
M22 x 1.5	17.00 (122.96)	18.50 (133.81)	28.00 (202.52)	24.00 (173.59)	34.00 (245.92)	29.00 (209.75)	47.00 (339.95)	52.00 (44.76)	56.00 (405.04)	75.00 (542.47)	85.00 (614.80)
M24 x Std.	20.50 (148.27)	21.50 (155.50)	33.00 (238.68)	27.00 (195.29)	40.00 (289.32)	34.00 (245.92)	55.00 (397.81)	58.00 (419.51)	63.00 (455.67)	82.00 (593.10)	92.00 (655.43)
M24 x 1.5	23.00 (166.35)	35.00 (253.15)	37.00 (267.62)	31.00 (224.22)	45.00 (325.48)	38.00 (202.52)	61.00 (441.21)	67.00 (484.61)	74.00 (535.24)	93.00 (672.66)	103.00 (744.99)

PREVIEW - YOUFIXTHIS.COM

Download full manual at youfixthis.com

REMOVAL

⚠ CAUTION!

Avoid disassembling cab if there are strong wind gusts, which could catch large surface area of cab shell and push it sideways during lift.

1. Park on firm and level ground.
2. Lower bucket to ground.
3. Shut engine down and remove key from starter switch.

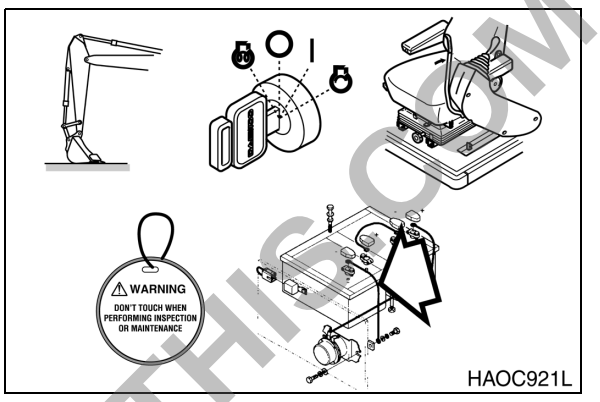

Figure 1

⚠ WARNING!

If engine must be run while performing maintenance, use extreme care. Always have one person in the cab at all times. Never leave the cab with the engine running.

4. Set safety lever on "LOCK" position.
5. Hang maintenance warning tag on controls.
6. Disconnect negative (-) battery cable leading to frame from battery.
7. Prepare cab shell for removal by disconnecting wiring connectors for:
   - A. Cab interior lighting.
   - B. External light wiring.
   - C. Radio antenna and connections.
   - D. Wiper/washer connections.

NOTE: *Control console wiring harnesses and hydraulic piping lines that pass through the floor of the cab do not need to be disassembled.*

NOTE: *If unit is equipped with a cab protective structure (for forestry, or hazardous working conditions), it must be removed.*

PREVIEW - YOUFIXTHIS.COM

Download full manual at youfixthis.com

GENERAL DESCRIPTION

Schematic(s) presented in this section are laid out on facing pages.

An overlapping edge has been taken into consideration so that a photocopy can be made and pasted together to make a complete schematic.

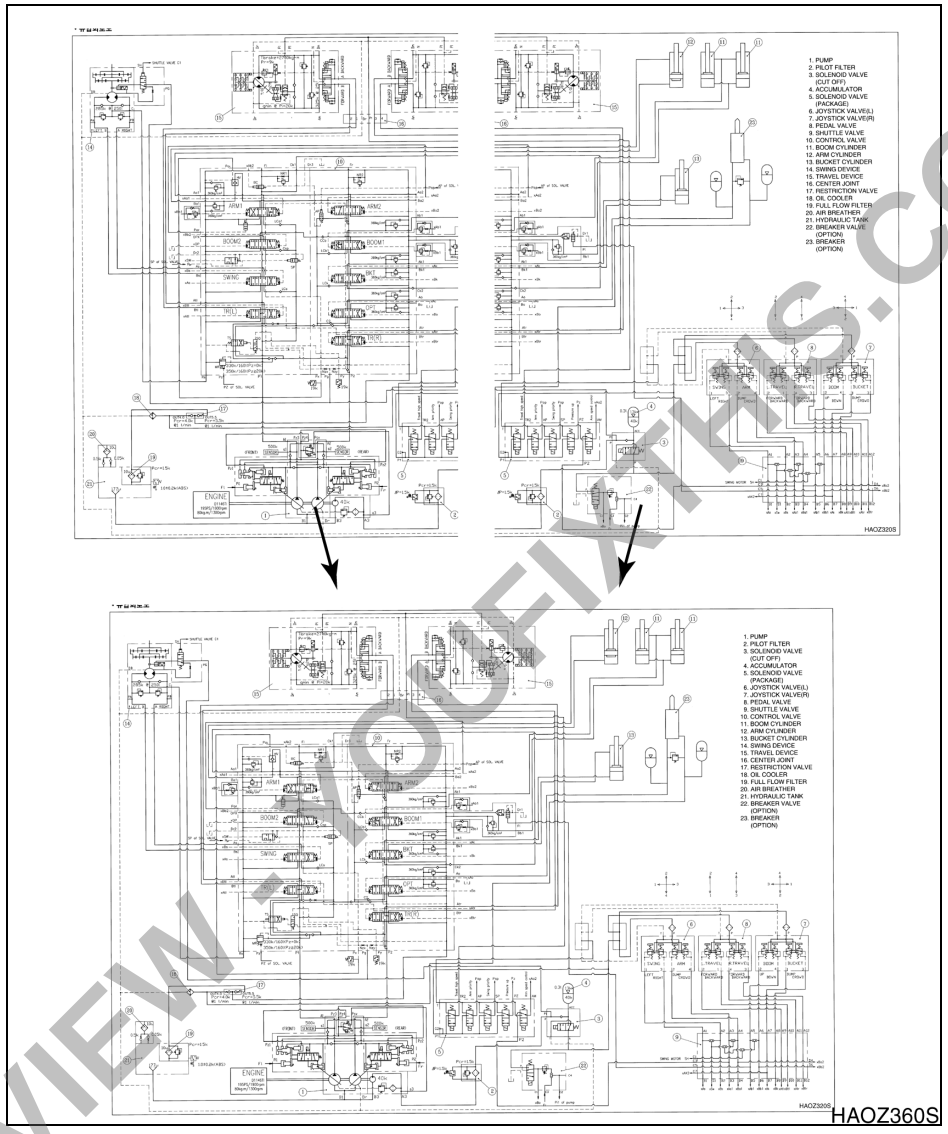

Figure 1

PREVIEW - YOUFIXTHIS.COM

Download full manual at youfixthis.com

GENERAL DESCRIPTION

Schematic(s) presented in this section are laid out on facing pages.

An overlapping edge has been taken into consideration so that a photocopy can be made and pasted together to make a complete schematic.

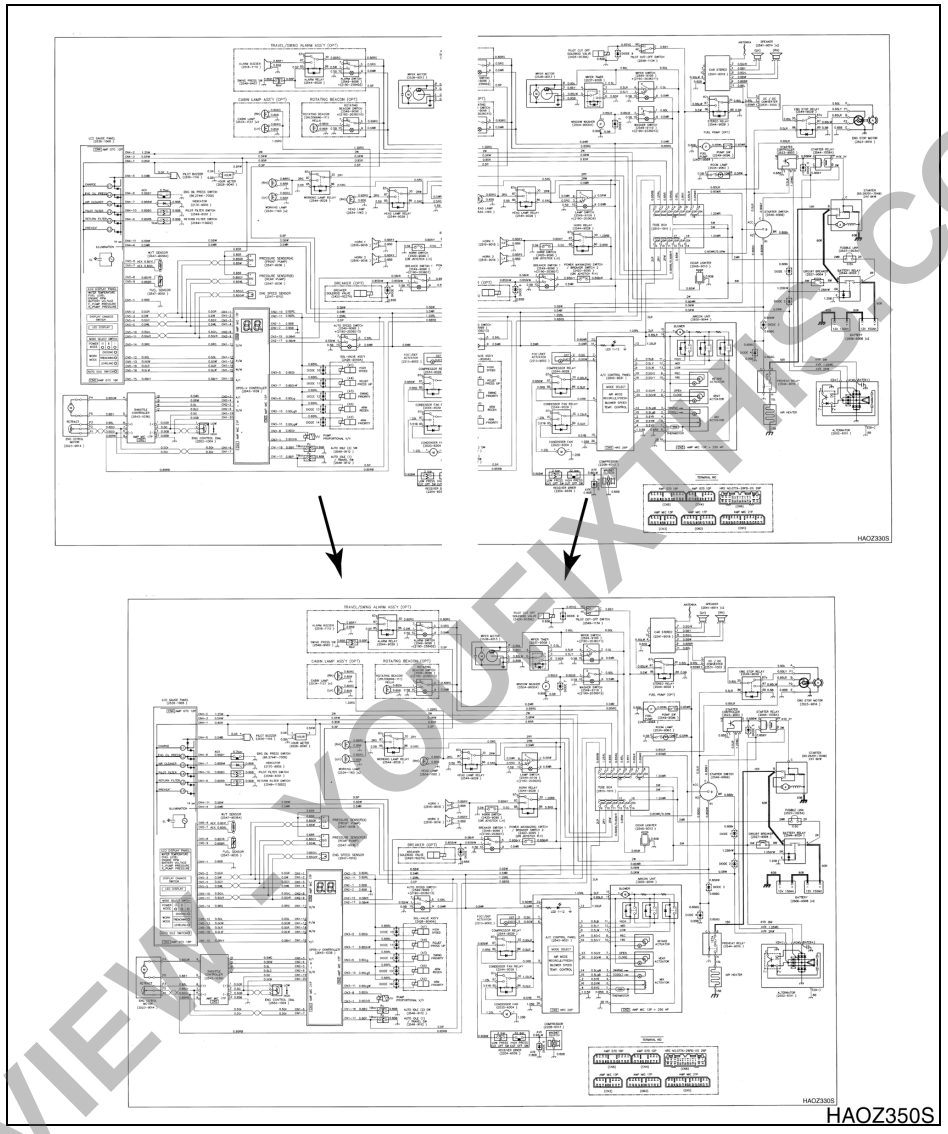

Figure 1

PREVIEW - YOUFIXTHIS.COM

Download full manual at youfixthis.com

TABLE OF CONTENTS

Safety

Track Excavator Safety.....S0102000

Specifications

Specifications for Solar 290LC-V.....S0202000

General Maintenance

General Maintenance Procedures.....S0302000

Standard Torques.....S0309000

Upper Structure

Cab.....S0402000

Counterweight.....S0403000

Fuel Tank.....S0405000

Fuel Transfer Pump.....S0405500

Swing Bearing.....S0407000

Swing Reduction Gearbox.....S0408000

Lower Structure and Chassis

Track Assembly.....S0505000

Engine and Drive Train

Air-Conditioner.....S0605010

Drive Coupling (Main Pump).....S0609000

Hydraulics

Hydraulic System Troubleshooting, Testing and Adjustment.....S0702000

Accumulator.....S0703000

Center Joint (Swivel).....S0704000

Cylinders.....S0705000

PREVIEW - YOUFIXTHIS.COM

Download full manual at youfixthis.com

TRACK EXCAVATOR SAFETY

⚠ CAUTION!

Follow all safety recommendations and safe shop practices outlined in the front of this manual or those contained within this section.

Always use tools and equipment that is in good working order.

Use lifting and hoisting equipment capable of safely handling load.

Remember, that ultimately safety is your own personal responsibility.

MODEL	SERIAL NUMBER RANGE
Solar 130LC-V	0001 and Up
Solar 220LC-V	0001 and Up
Solar 170LC-V	1001 and Up
Solar 220N-V	1001 and Up
Solar 250LC-V	1001 and Up
Solar 290LC-V	0001 and Up
Solar 330LC-V	1001 and Up
Solar 400LC-V	1001 and Up
Solar 450LC-V	1001 and Up

PREVIEW - YOUFIXTHIS.COM

Copyright 2000 Daewoo

August 2000

Download full manual at youfixthis.com

PREVIEW - YOUFIXTHIS.COM

Download full manual at youfixthis.com

DIMENSIONS AND WORKING RANGE

⚠ WARNING!

The actual value for dimension "L" Digging Reach, depends on the stability and support provided by ground conditions. Digging too far underneath the excavator if soil conditions are wet, loose or unstable can collapse ground support, which could cause injury and/or equipment damage.

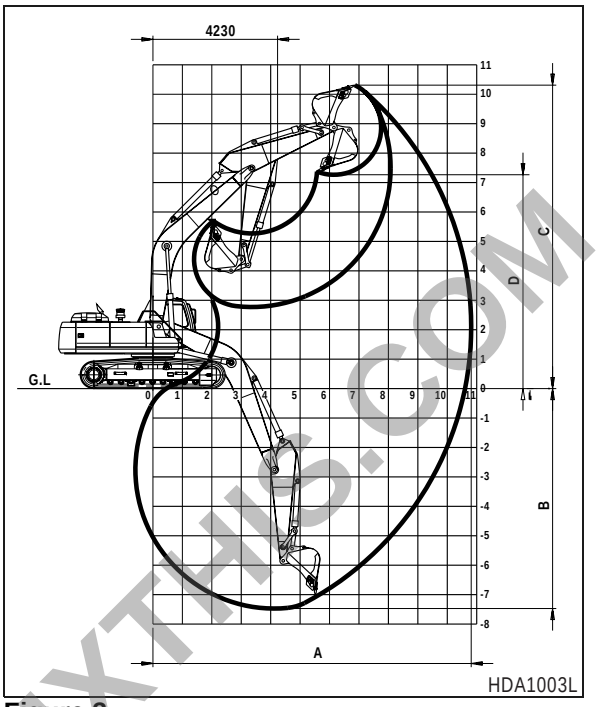

Figure 3

	COMPONENT	DIMENSION
	BOOM TYPE	ONE PIECE 6,245 mm (20" 6")
	ARM TYPE	3,100 mm (10’ 2")
	BUCKET TYPE	1.1 cu. m (1.4 cu. yd)
A	MAX. DIGGING REACH	10,820 mm (35’ 5")
B	MAX. DIGGING REACH (GROUND)	10,600 mm (34’ 9")
C	MAX. DIGGING DEPTH	7,470 mm (24’ 6")
D	MAX. LOADING HEIGHT	7,270 mm (23’ 10")
F	MAX. DIGGING HEIGHT	10,310 mm (33’ 10")
G	MAX. BUCKET PIN HEIGHT	8,870 mm (29’ 1")
H	MAX. VERTICAL WALL	6,065 mm (19’ 11")
I	MAX. RADIUS VERTICAL	6,900 mm (22’ 8")
J	MAX. DEPTH TO 8FT LINE	7,265 mm (23’ 10")
K	MIN. RADIUS 8FT LINE	2,750 mm (9’)
L	MIN. DIGGING REACH	455 mm (1’ 6")
M	MIN. SWING RADIUS	4,230 mm (13’ 11")

PREVIEW - YOUFIXTHIS.COM

Download full manual at youfixthis.com

TORQUE VALUES FOR HOSE CLAMPS

The following chart provides the tightening torques for hose clamps used in all rubber applications (radiator, air cleaner, operating lever boots, hydraulic system, etc.).

CLAMP TYPE AND SIZE	TORQUE PLUS OR MINUS 5 in lbs (0.1 kg•m)			
	RADIATOR, AIR CLEANER, BOOTS, ETC.		HYDRAULIC SYSTEM	
	KILOGRAM METER (kg•m)	INCH POUNDS (In. Lbs.)	KILOGRAM METER (kg•m)	INCH POUNDS (In. Lbs.)
``T'' Bolt (Any Diameter)	0.6 - 0.7	55 - 65	-------	------
Worm Drive - 1-3/4 in. Open Diameter and Under	0.2 - 0.3	20 - 30	0.5 - 0.6	40 - 50
Worm Drive - Over 1-3/4 in. Open Diameter	0.5 - 0.6	40 - 50	-------	------
Worm Drive - All ''Ultra-Tite''	1.1 - 1.2	95 - 105	0.5 - 0.6	40 - 50

PREVIEW - YOUFIXTHIS.COM

Download full manual at youfixthis.com

START-UP PROCEDURES

1. Loosen plug on top of fuel filter head.
2. Unscrew and pump the hand operated primer pump located by the fuel injection pump. Pump primer until fuel is present at plug hole in fuel filter head.
3. Tighten plug in fuel filter head.
4. Continue to pump primer pump until a strong resistance is felt. Screw the primer pump knob back into housing.
5. Start engine and look for signs of leaks.
6. Repeat procedure if necessary.

PREVIEW - YOUFIXTHIS.COM

Download full manual at youfixthis.com

CLEANING AND INSPECTION (WEAR LIMITS AND TOLERANCES)

⚠ CAUTION!

Refer to the "Welding Precautions and Guidelines" information in "General Maintenance Procedures" section for general recommendations and specific safety precautions, prior to starting any lower travel frame component rebuilding procedure.

The tables that follow provide factory-specified dimensional limits (as-new condition, recommended service and replacement limit) for lower travel frame components.

Recommended maintenance to renew most listed components requires welding on additional material and grinding off excess. Some components must be replaced before the service limit is exceeded. No maintenance or renewal is possible.

Compare the values in the tables with dimensions and profiles shown in the adjacent figures.

Component / Reference Dimensions	Reference	Normal (New) Dimension	Recommended Limit for Maintenance	Limit for Use (Repair - P or Replace - R)
Standard 600 mm Shoe 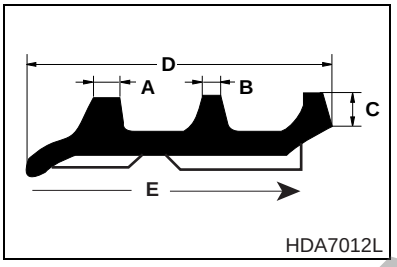 **Figure 4**	A	26 mm (1.024")	20 mm (0.787")	13 mm [P] (0.512")
	B	26 mm (1.024")	20 mm (0.787")	13 mm [P] (0.512")
	C	37 mm (1.457")	30 mm (1.181")	23 mm [P] (0.906")
	D	232.5 mm (9.154")		
	E	110 mm (4.331")		
Track link, master link 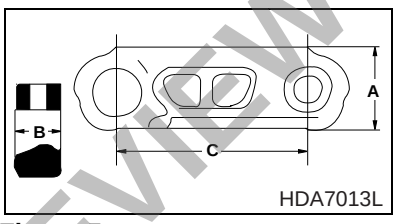 **Figure 5**	A	116.4 mm (4.583")	108 mm (4.252")	103 mm [P] (4.055")
	B	50 mm (1.969")	45 mm (1.772")	40 mm [P] (1.575")
	C*	203.2 mm (8.0")	206 mm (8.110")	208 mm [R] (8.189")
	*Check and record the pitch of at least 5 links. Use average of all measurements to assess required service or action. Master links must be replaced, they cannot be renewed or rebuilt.			

PREVIEW - YOUFIXTHIS.COM

Download full manual at youfixthis.com

Reference Number	Description
1	Battery
2	Battery Relay
3	Fusible Link
4	Circuit Breaker
5	Fuse
6	Fuse
7	Fuse
8	Lamp Switch
9	Foot / Defrost Control Actuator
10	Compressor Relay
11	Condenser Fan Relay
12	Condenser Fan Motor
13	Receiver Dryer (Low / High Pressure Cut Off Switch)
14	Diode

Reference Number	Description
15	Compressor
16	A/C Control Panel
17	A/C Unit
17-1	Blower Motor
17-2	Resister
17-3	High Speed Relay
17-4	Mid Speed Relay
17-5	Low Speed Relay
17-6	Recirculate / Fresh Air Control Actuator
17-7	Vent Actuator
17-8	Temperature Control Actuator
17-9	Temperature Sensor (Evaporator)

PREVIEW - YOUFIXTHIS.COM

Download full manual at youfixthis.com

RIGHT SWING OPERATING CIRCUIT

When the swing control lever is pushed to the right swing position, pilot pressure from the left side pilot valve is directed to the left side pump regulator and left half of the control valve. Output flow from the left pump is then directed through the PSR and SR ports of the control valve to the SR port of the swing motor.

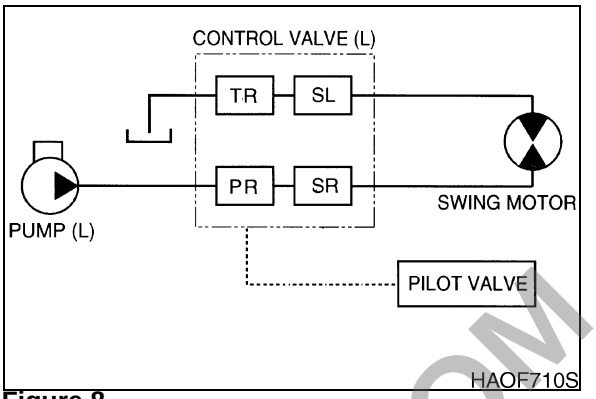

Figure 8

LEFT SWING OPERATING CIRCUIT

When the swing control lever is pushed to the left swing position, the control valve spool at the left side of the control valve moves in the opposite direction and output flow from the left pump is directed through the PSL and SL ports of the control valve to the SL port of the swing motor.

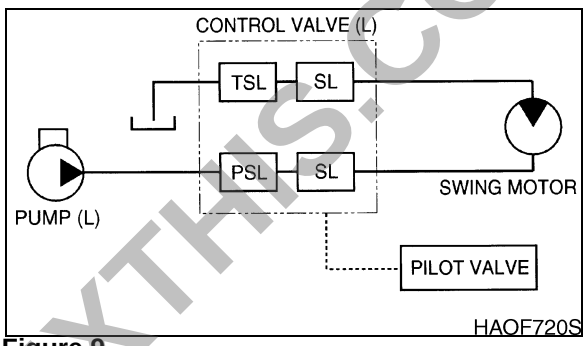

Figure 9

SWING RELIEF VALVE AND MAKE-UP VALVE

Whenever the spool is shifted to the neutral mode during swing operation, the possibility exists that surge pressure in the circuit - caused by inertial momentum of the upper works and correspondingly reduced pressure at the opposite motor port - could produce cavitation in the circuit. To keep that from happening, a 285 kg/cm sq. (4,052 psi) relief valve is installed in the swing motor and a large-capacity make-up valve is connected to the entrance port of the hydraulic reservoir, helping maintain acceptable pressures on both sides of the circuit.

TRAVEL OPERATING CIRCUIT

Output flow from both halves of the pump assembly is directed to the right and left travel motors through the right and left sides of the control valve, and the upper works center joint.

PREVIEW - YOUFIXTHIS.COM

Download full manual at youfixthis.com

DISASSEMBLY

Refer to the assembly drawing of the swivel joint for component references (Figure 1).

IMPORTANT

Do not unbolt the center joint from the lower car body until an adequate number of piping block-off plates are available, for disconnected piping lines. Be sure that system pressure has been vented - including the hydraulic accumulator and tank reserve pressure - before disassembly is started.

1. Clean off the exterior of the swivel joint after it has been removed.
2. Scribe or otherwise mark a line across the cover and the body of the center joint, to allow reassembly in the same configuration.
3. Unbolt the four 12 mm fasteners holding the cover. Use a vise or v-block to hold the assembly in place.
4. Remove the cover, withdraw the O-ring and unbolt the fasteners holding the thrust plate, taking care to support the stem (inner) assembly, so that it will not separate and fall out when bolts are disconnected.
5. If the stem assembly doesn't separate easily when the thrust plate and fastener bolts are removed, use a wooden block and hammer to drive it out of the housing.
6. O-rings and seals should be replaced whenever the assembly is being overhauled or rebuilt. For repair procedures or emergency tear down, use a thin but rounded-tip, smooth-edge scraper or spatula to remove O-rings or seals, to avoid causing damage to those that must be reused.

   NOTE: *The "backup ring" shown in the assembly drawing (above the swivel joint stem lower seals) should not be overlooked. It is tucked behind the top slip ring, doubled up inside the same groove in the body of the stem.*
7. Before reassembling the center swivel, visually inspect ball bearing surfaces for visible signs of wear, damage or discoloration and replace any worn component.

   Check clearance between the cover and thrust plate, and between the stem and thrust plate. Replace any component that shows more than 0.5 mm (0.020") of visible wear.

   Clearance between the stem and body of the center swivel must be tight. Replace or repair either component if there is more than 0.1 mm (0.0039") of measurable wear.

REASSEMBLY

1. Pre-lubricate O-rings with hydraulic oil, white grease or petroleum jelly.

⚠ CAUTION!

Apply a very light film of white grease or petroleum jelly to the lower rim of the stem and inner surface of the center swivel body. Apply slow, even-handed pressure, using both hands, to slowly push the stem into the body. Seals may be damaged if the stem is pushed in too quickly.

2. Thoroughly clean all other component surfaces of dirt or grease prior to reassembly.

PREVIEW - YOUFIXTHIS.COM
Download full manual at youfixthis.com

11. Reposition motor so that end of drive shaft faces out to one side. Pull out cylinder block (111) and disassemble pistons (121), retainer plate (123), spherical bushing (113), front spacer (117) and shoe plate (124). Be careful not to make any scratches or leave nicks on reciprocating parts.

    NOTE: *Record or mark piston position or store them in order in which they were removed so that they can be returned to same cylinder bores they were taken out of. Service life could be extended incrementally by maintaining previous wear-pattern relationships by avoiding new ones.*

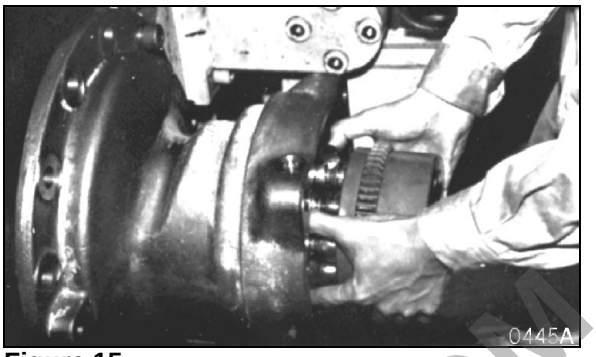

Figure 15

12. Pull out friction plates (742) and separator plates (743) from area behind cylinder block.

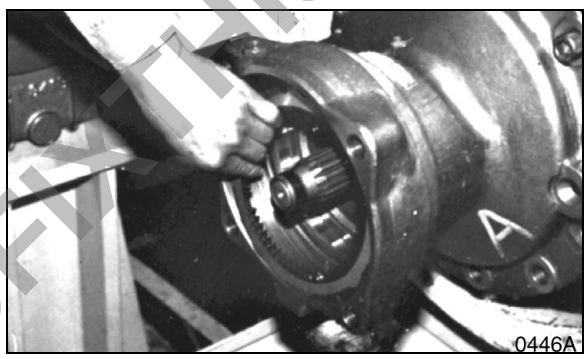

Figure 16

13. Remove lock ring (437) from around drive shaft. Use a large enough pair of snap-ring pliers to properly tension ring and pull it away from locking groove.

    Use extra caution in pulling off front cover (304) behind snap ring. Drive shaft oil seal (491) underneath cover must be replaced if it is damaged during disassembly. Use a little bit of extra caution (and a very large set of channel locks, a puller or extra wide adjustable wrench) to carefully withdraw cover straight back off drive shaft.

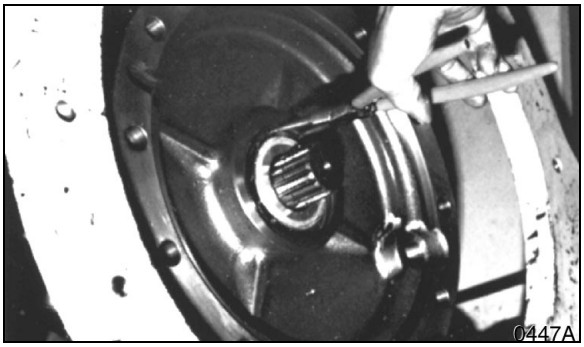

Figure 17

PREVIEW - YOUFIXTHIS.COM

Download full manual at youfixthis.com

DISASSEMBLY

GENERAL NOTES FOR DISASSEMBLY.

1. Be careful not to damage seal parts of O-ring, oil seal and the sliding surface of gear, pin and bearing.
2. When the motor is installed in the machine, it is possible to disassemble this motor. However, you should be careful not to insert dirt or mud.
3. The numbers in parentheses, indicate part numbers of Figure 10.
4. The pipe laying part of motor is the rear part, and the output is the front part.

REDUCTION GEARBOX

1. Choose a work area for disassembly.

   NOTE: *(1) Choose a clean work area.*

   (2) Use a rubber mat or other protective overlay on the workbench area to prevent damaging or scratching any precision machined components.

2. Clean exterior surfaces of gearbox.
3. Turn gearbox so that drain port is facing down. Drain gear oil.

   NOTE: *Use a clean container and examined gear oil for evidence of unusual operation or damage to components. Do not reuse old gear oil.*

4. After placing reduction gear with side cover (4) facing up, remove hex screw (30) and side cover.

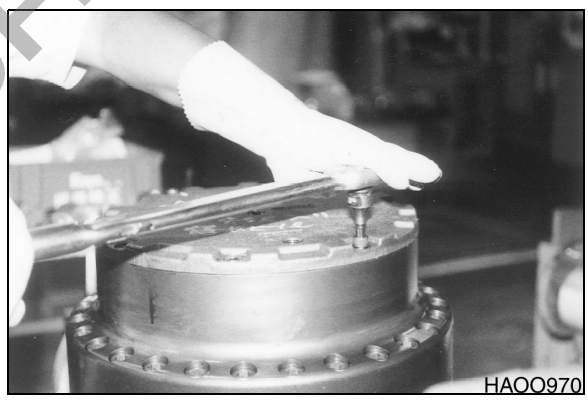

Figure 14



Figure 15

PREVIEW - YOUFIXTHIS.COM

Download full manual at youfixthis.com

NOTE: *Component parts (numbered in parentheses) correspond to those in Figure 8.*

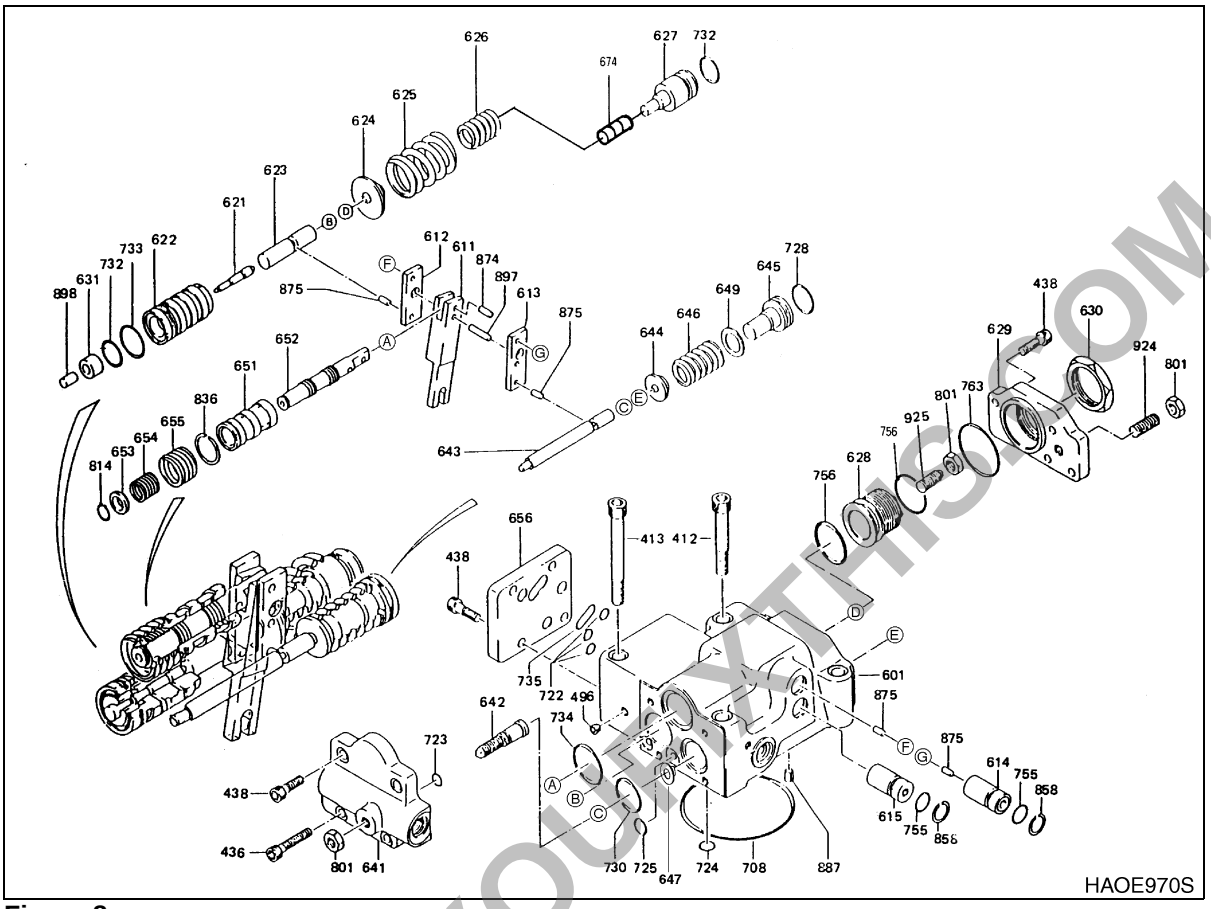

Figure 8

PREVIEW - YOUFIXTHIS.COM

Download full manual at youfixthis.com

MAIN RELIEF VALVE

1. Normal (low pressure) Operation (Pz pilot signal: "OFF")

   - Piston (d) is pushed to the right most position by spring (c).

   A. The pressurized oil from the main pump flows into chamber 3 through the orifice (2) of the main poppet A. Main poppet A is completely closed because d1>d2.

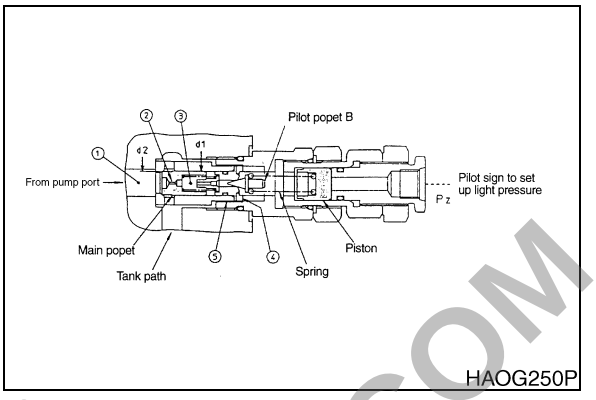

Figure 7

   B. When the oil pressure reaches the set pressure of spring C, the pilot poppet B is opened and oil flows to the tank through paths (4) and (5).

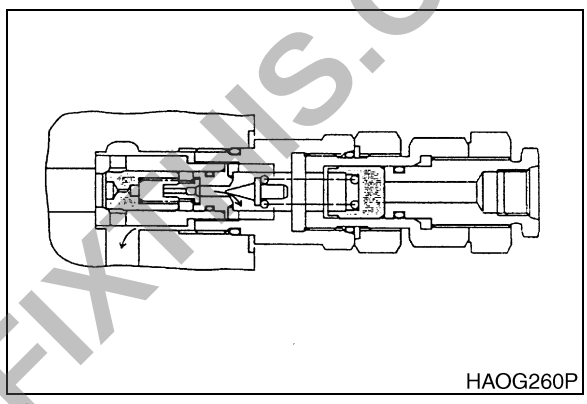

Figure 8

   C. During oil flow when pressure drops in front and back of orifice (2) and pressure of chamber (1) d2 > pressure of chamber (1) d1, main poppet A will open and pressurized oil flows to the tank.

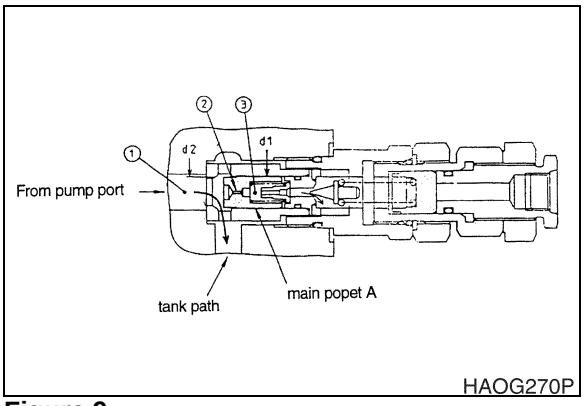

Figure 9

PREVIEW - YOUFIXTHIS.COM

Download full manual at youfixthis.com

IMPORTANT

When disassembling Overload Relief Valve, tag and label each component so that all parts can be reassembled in the proper order.

IMPORTANT

Do not disassemble the pressure adjustment element. The pressure is factory set and can not be correctly adjusted on the vehicle.

IMPORTANT

Each Overload Relief Valve must be reinstalled into its original position.

1. Loosen sleeve (1) and remove valve assembly.

Reference Number	Description
1	Sleeve
2	Cap

Sleeve hexagonal base	32 mm
Tightening torque	6 kg•m (43 ft lbs)

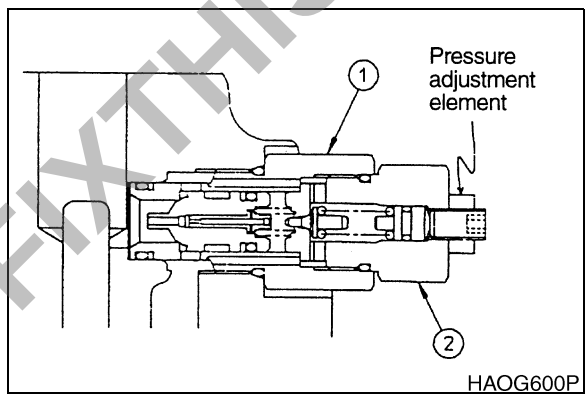

Figure 76

2. Loosen cap (1) subassembly from sleeve assembly and remove O-ring, spring (2) and pilot poppet (3).

Reference Number	Description
2	Cap
3	Spring
4	Poppet

Cap hexagonal base	27 mm
Tightening torque	6 kg•m (43 ft lbs)

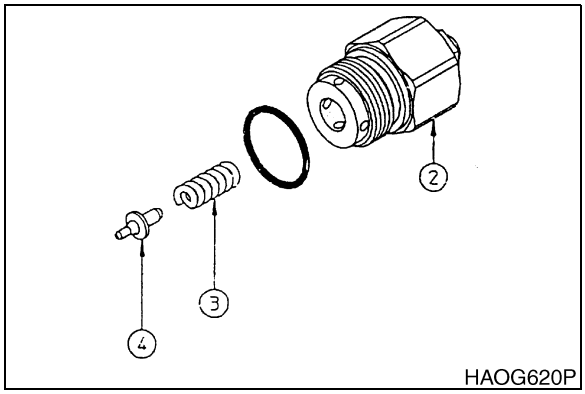

Figure 77

PREVIEW - YOUFIXTHIS.COM

Download full manual at youfixthis.com

REASSEMBLY

1. Clean all parts and dry them with compressed air. Keep all parts and tools free from dust. Lubricate all moving parts.
2. Tighten plug (15) slowly and diagonally.

   NOTE: *Plug tightening torque 350 kg•m (2,530 ft lbs)*

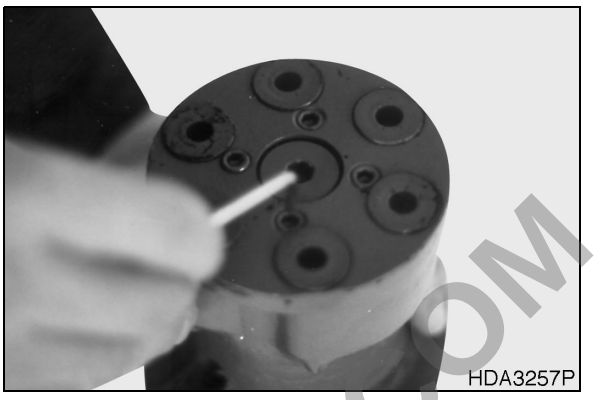

Figure 19

3. Assemble shim (10), spring (18) and spring seat (19).

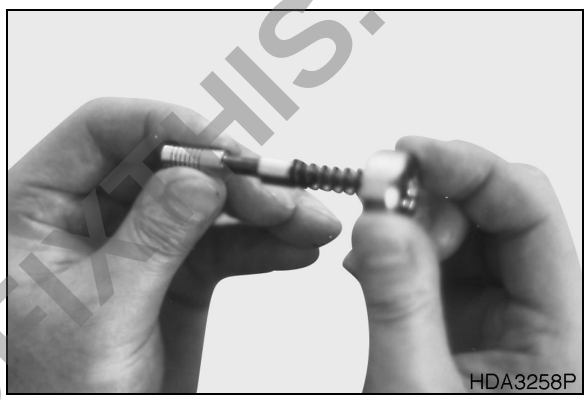

Figure 20

4. While pressing down spring seat (19), insert stopper (9).



Figure 21

PREVIEW - YOUFIXTHIS.COM

Download full manual at youfixthis.com

GENERAL DESCRIPTION

THEORY OF OPERATION

The remote control valve contains four push rods, a spring holder and return spring, which are located in the valve casing. The valve works as a pressure reduction valve. The housing has six ports, which include input port P, tank port T and four secondary pressure ports. Gear pump pressure is used for operation control spools.

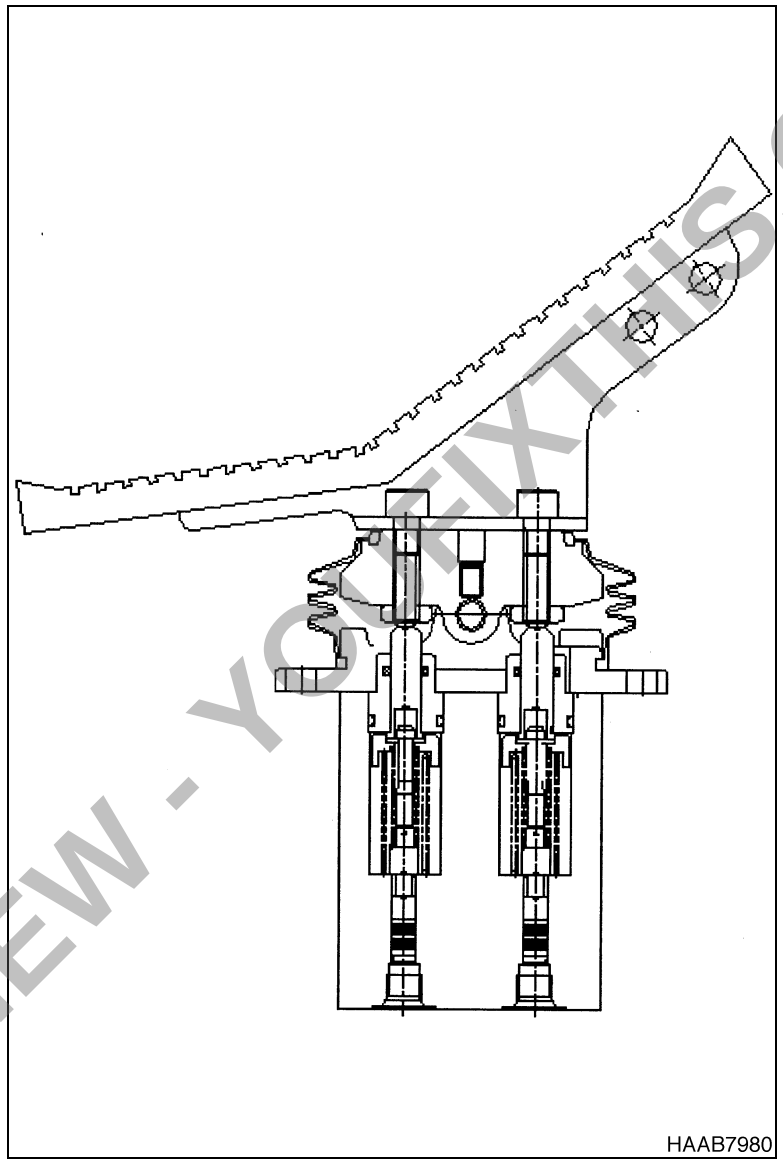

Figure 1

NEUTRAL MODE

When the lever is in neutral mode, the spool (8) is thrust upward by return spring (18) and the force of balance spring (11), which determines the secondary discharge pressure, is not transmitted to the spool The input port closed and the pressure of the output port is the same as the pressure of the tank port T.

PREVIEW - YOUFIXTHIS.COM

Download full manual at youfixthis.com

When the starter switch is in the ‘OFF’ position, the internal components of the engine stop motor‘s cam switch is in the position shown.

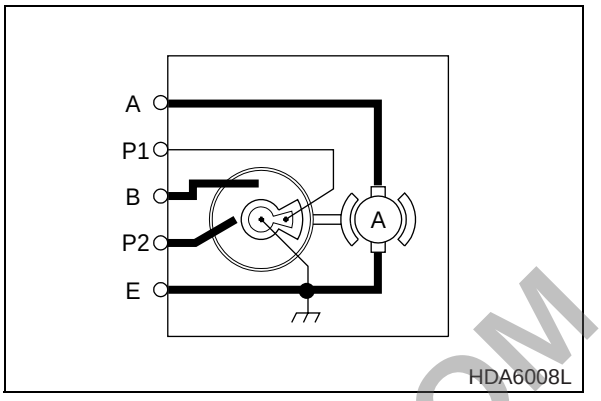

Figure 8

PREVIEW - YOUFIXTHIS.COM

Download full manual at youfixthis.com

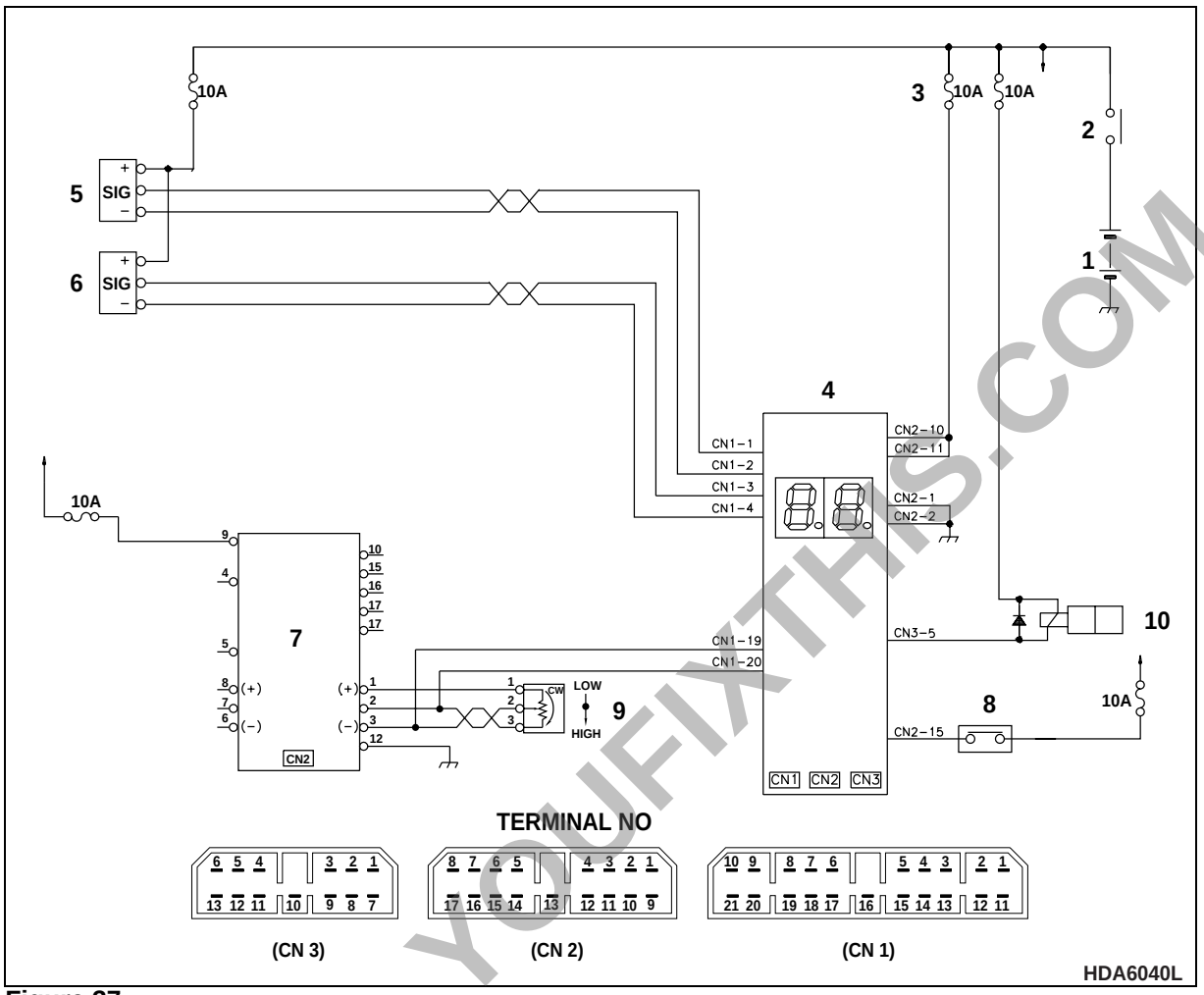

Figure 37

Reference Number	Description
1	Battery
2	Battery Relay
3	Fuse
4	EPOS-V Controller
5	Pressure Sensor (Front Pump)

Reference Number	Description
6	Pressure Sensor (Rear Pump)
7	Engine Throttle Controller
8	Automatic Travel Select Switch
9	Engine Control Dial

PREVIEW - YOUFIXTHIS.COM

Download full manual at youfixthis.com

PREVIEW ONLY

You're viewing 25 of 616 pages

The full manual includes:

- All 616 pages, complete
- Searchable PDF (find any keyword)
- No watermarks
- Instant download
- Print-ready quality

GET FULL MANUAL NOW

Daewoo Solar 290LC-V Shop Manual

Scan or click anywhere
youfixthis.com

Click anywhere on this page to get the full manual