DAEWOO
DAEWOO HEAVY INDUSTRIES & MACHINERY LTD.

SPECIFICATIONS FOR SOLAR 300LC-V

⚠ CAUTION!

Follow all safety recommendations and safe shop practices outlined in the front of this manual or those contained within this section.

Always use tools and equipment that is in good working order.

Use lifting and hoisting equipment capable of safely handling load.

Remember, that ultimately safety is your own personal responsibility.

MODEL	SERIAL NUMBER RANGE
Solar 300LC-V	1001 and Up

PREVIEW - YOUFIXTHIS.COM

Copyright 2002 Daewoo

May 2002

Download full manual at youfixthis.com

DAEWOO
DAEWOO HEAVY INDUSTRIES & MACHINERY LTD.

GENERAL MAINTENANCE PROCEDURES

⚠ CAUTION!

Follow all safety recommendations and safe shop practices outlined in the front of this manual or those contained within this section.

Always use tools and equipment that is in good working order.

Use lifting and hoisting equipment capable of safely handling load.

Remember, that ultimately safety is your own personal responsibility.

MODEL	SERIAL NUMBER RANGE
ALL MODELS	ALL RANGES

PREVIEW - YOUFIXTHIS.COM

Copyright 2002 Daewoo

May 2002

Download full manual at youfixthis.com

DAEWOO
DAEWOO HEAVY INDUSTRIES & MACHINERY LTD.

STANDARD TORQUES

⚠ CAUTION!

Follow all safety recommendations and safe shop practices outlined in the front of this manual or those contained within this section.

Always use tools and equipment that is in good working order.

Use lifting and hoisting equipment capable of safely handling load.

Remember, that ultimately safety is your own personal responsibility.

MODEL	SERIAL NUMBER RANGE
ALL MODELS	ALL RANGES

PREVIEW - YOUFIXTHIS.COM

Copyright 2002 Daewoo

May 2002

Download full manual at youfixthis.com

GENERAL DESCRIPTION

Schematic(s) presented in this section are laid out on facing pages.

An overlapping edge has been taken into consideration so that a photocopy can be made and pasted together to make a complete schematic.

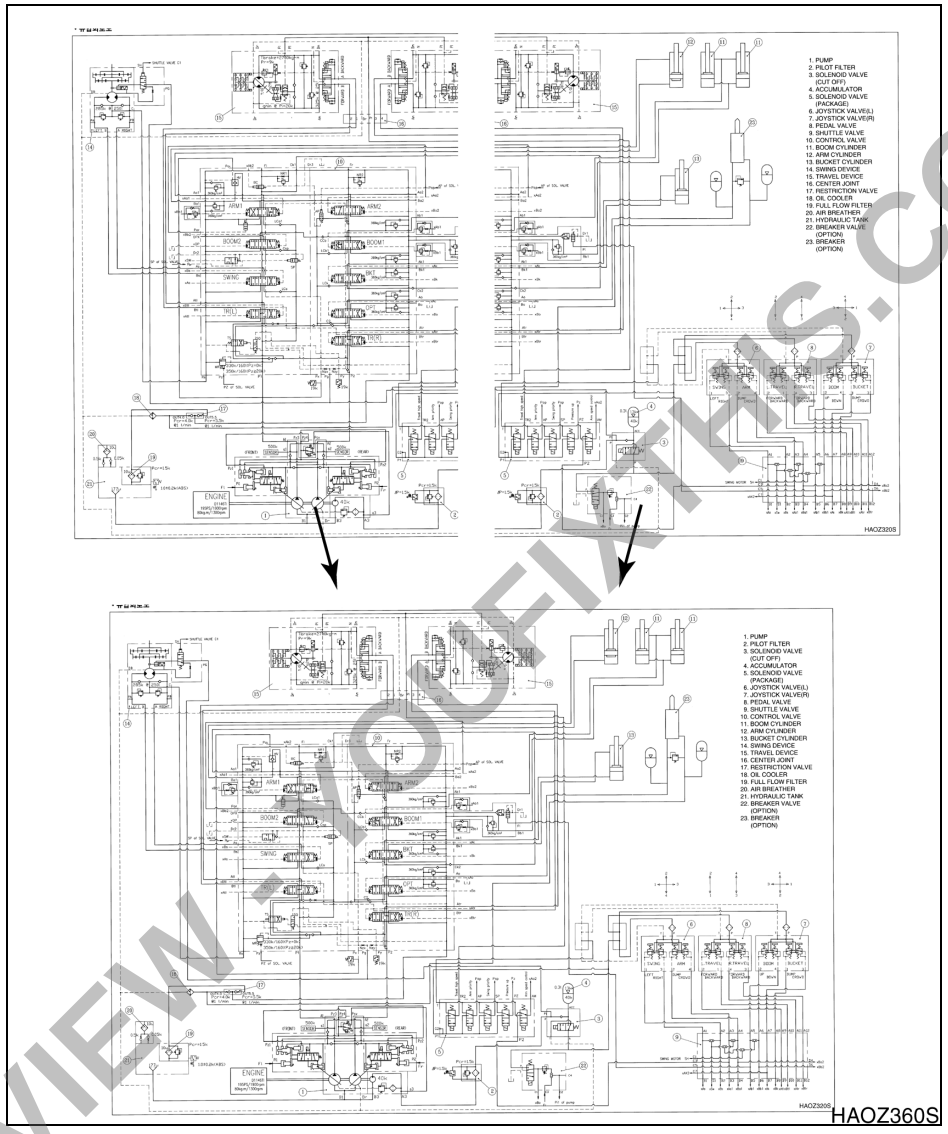

Figure 1

PREVIEW - YOUFIXTHIS.COM

Download full manual at youfixthis.com

GENERAL DESCRIPTION

Schematic(s) presented in this section are laid out on facing pages.

An overlapping edge has been taken into consideration so that a photocopy can be made and pasted together to make a complete schematic.

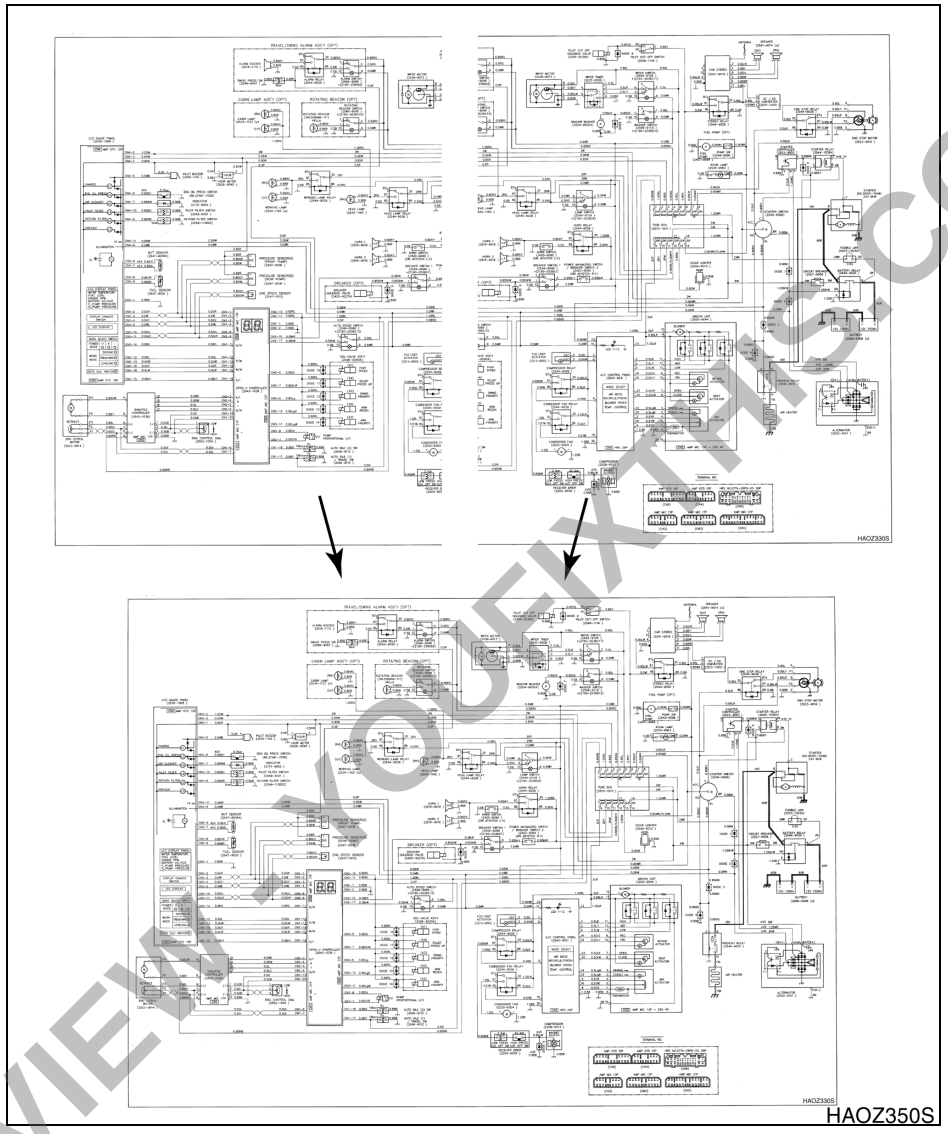

Figure 1

PREVIEW - YOUFIXTHIS.COM

Download full manual at youfixthis.com

TABLE OF CONTENTS

Specifications

Safety

Track Excavator Safety.....S0102000
Specifications for Solar 300LC-V..... S0202080K

General Maintenance

General Maintenance Procedures.....S0302000
Standard Torques.....S0309000

Upper Structure

Cab S0402040K
Counterweight..... S0403050K
Fuel Tank..... S0405110K
Fuel Transfer Pump.....S0405500
Swing Bearing.....S0407000
Swing Reduction Gear..... S0408070K

Lower Structure and Chassis

Track Assembly S0505000

Engine and Drive Train

Air-Conditioner..... S0605060K
Drive Coupling (Main Pump)..... S0609010K

Hydraulics

Hydraulic System Troubleshooting, Testing and Adjustment S0702170K
Accumulator..... S0703010K
Center Joint (Swivel)..... S0704080K
Cylinders.....S0705000

PREVIEW - YOUFIXTHIS.COM

Download full manual at youfixthis.com

DAEWOO
DAEWOO HEAVY INDUSTRIES & MACHINERY LTD.

TRACK EXCAVATOR SAFETY

⚠ CAUTION!

Follow all safety recommendations and safe shop practices outlined in the front of this manual or those contained within this section.

Always use tools and equipment that is in good working order.

Use lifting and hoisting equipment capable of safely handling load.

Remember, that ultimately safety is your own personal responsibility.

MODEL	SERIAL NUMBER RANGE
Solar 130LC-V	0001 and Up
Solar 170LC-V	1001 and Up
Solar 220LC-V	0001 and Up
Solar 220N-V	1001 and Up
Solar 250LC-V	1001 and Up
Solar 290LC-V	0001 and Up
Solar 300LC-V	1001 and Up
Solar 300LL	1001 and Up
Solar 330LC-V	1001 and Up
Solar 340LC-V	1001 and Up
Solar 400LC-V	1001 and Up
Solar 420LC-V	1001 and Up
Solar 450LC-V	1001 and Up
Solar 470LC-V	1001 and Up

PREVIEW - YOUFIXTHIS.COM

Copyright 2002 Daewoo

May 2002

Download full manual at youfixthis.com

PREVIEW - YOUFIXTHIS.COM

Download full manual at youfixthis.com

ACTION WHEN ABNORMALLY IS FOUND DURING INSPECTION

If any abnormality is found during inspection, always carry out repairs. In particular, if the machine is used when there are still problems with the brake or work equipment systems, it may lead to serious injury.

If necessary depending on the type of failure, please contact your Daewoo distributor for repairs.

PRECAUTIONS WITH HIGH PRESSURE LINE, TUBES AND HOSES

When inspecting or replacing high-pressure piping or hoses, check that the pressure has been released form the circuit. Failure to release the pressure may lead to serious injury. Always do the following;

- Wear protective glasses and leather gloves.
- Fluid leaks from hydraulic hoses or pressurized components can be difficult to see but pressurized oil has enough force to pierce the skin and cause serious injury. Always use a piece of wood or cardboard to check for suspected hydraulic leaks. Never use your hands or expose your fingers.
- Do not bend high pressure lines. Do not strike high pressure lines. Do not install lines, tubes or hoses that are bent or damaged.
- Make sure that all clamps, guards and heat shields are installed correctly to prevent vibration, rubbing against other parts, and excessive heat during operation.
  - If any of the following conditions are found, replace the part.
  - Damage or leakage from hose end.
  - Wear, damage, cutting of covering, or exposure of strengthening wire layer.
  - Cover portion is swollen in places.
  - There is twisting or crushing at movable parts of hose.
  - Foreign material is embedded in the covering.
  - Hose end is deformed.

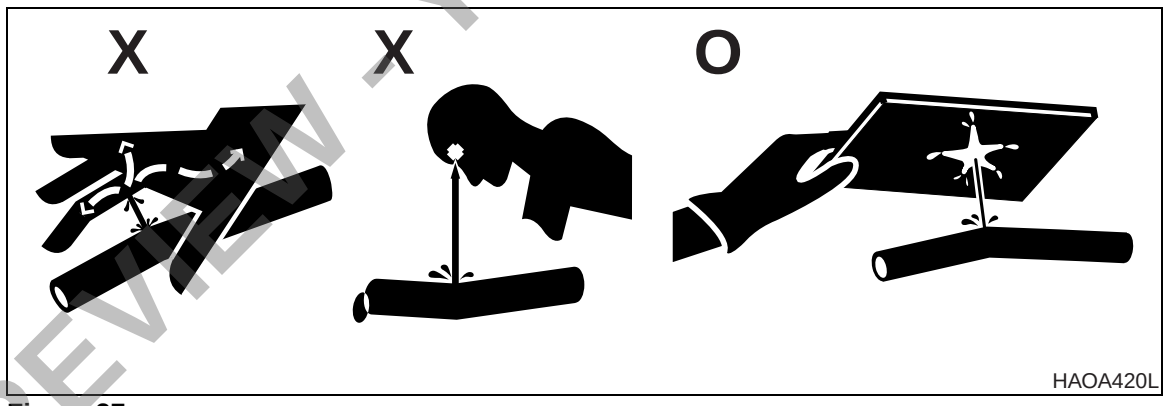

Figure 37

PREVIEW - YOUFIXTHIS.COM

Download full manual at youfixthis.com

⚠ CAUTION!

Observe the following safety precautions:

1. **Use extra caution and adequate safety shielding when welding near fuel and oil tanks, batteries, hydraulic piping lines or other fire hazards.**
2. **Never weld when the engine is running. Battery cables must be disconnected before the welding procedure is started.**
3. **Never weld on a wet or damp surface. The presence of moisture causes hydrogen embrittlement and structural weakening of the weld.**
4. **If welding procedures are being performed near cylinder rods, operator's cab window areas or any other assemblies that could be damaged by weld spatters, use adequate shielding protection in front of the assembly.**
5. **During equipment setup, always attach ground cables directly to the area or component being welded to prevent arcing through bearings, bushings, or spacers.**
6. **Always use correct welding rods for the type of weld being performed and observe recommended precautions and time constraints. AWS Class E7018 welding rods for low alloy to medium carbon steel must be used within two hours after removal from a freshly opened container. Class E11018G welding rods for T-1 and other higher strength steel must be used within 1/2 hour.**

HYDRAULIC SYSTEM - GENERAL PRECAUTIONS

Always maintain oil level in the system at recommended levels. Assemblies that operate under heavy loads, at high speed, with extremely precise dimensional tolerances between moving parts - pistons and cylinders, or shoes and swash plates, for example - can be severely damaged if oil supply runs dry.

Assemblies can be run dry and damaged severely in a very short time when piping or hoses are disconnected to repair leaks and/or replace damaged components. Hoses that are inadvertently switched during disassembly (inlet for outlet and vice versa), air introduced into the system or assemblies that are low on oil due to neglect or careless maintenance, could all produce sufficient fluid loss to cause damage.

When starting the engine (particularly after long layoff or storage intervals), make sure that all hydraulic controls and operating circuits are in neutral, or "OFF." That will prevent pumps or other components that may be temporarily oil-starved from being run under a load.

Replacement of any hydraulic system component could require thorough cleaning, flushing, and some amount of pre-filling with fresh, clean oil if the protective seal on replacement parts has obviously been broken or if seal integrity may have been compromised. When protective seals are removed before installation and reassembly, inspect all replacement parts carefully, before they are installed. If the replacement part is bone dry (with no trace of factory pre-lube) or has been contaminated by dirt or by questionable oils, flushing and pre-filling with clean hydraulic fluid is recommended.

Vibration, irregular or difficult movement or unusual noise from any part of the hydraulic system could be an indication of air in the system (and many other types of problems). As a general precaution (and to help minimize the risk of potential long-term damage), allow the engine to run at no-load idle speed immediately after initial start-up. Hydraulic fluid will circulate, releasing any air that may have been trapped in the system before load demands are imposed.

A daily walk-around pre-start equipment safety inspection, including a quick visual scan for any exterior evidence of leaking hydraulic fluid, can help extend the service life of system components.

PREVIEW - YOUFIXTHIS.COM
Download full manual at youfixthis.com

⚠ WARNING!

If the turntable deck has been unbalanced by removal of weight from one end only, traveling the excavator, swinging the turntable, movement over bumps or sloping and uneven surfaces could cause loss of control and possible accidents or injuries.

To maintain stability the counterweight should be removed whenever the front attachment is taken off the machine.

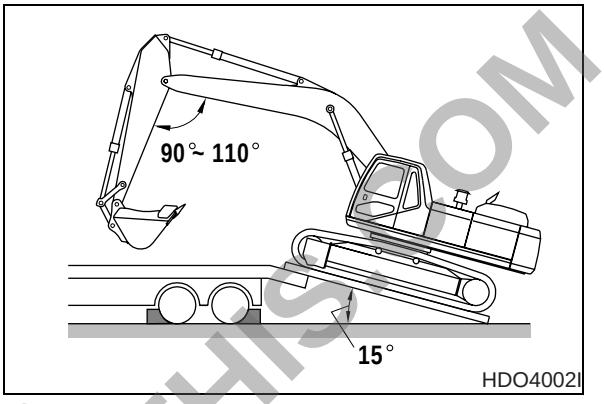

Figure 1

When loading an excavator (either track or wheeled type) on a trailer for transport after the front attachment has been removed, secure the swing lock (if equipped) to hold the deck in place and always go backwards up the loading ramp. The counterweight end of the deck has to get on the trailer first, while the cab is still going up the ramp (Figure 1).

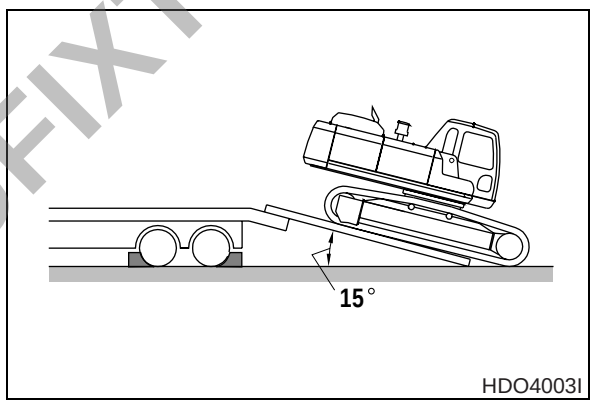

Figure 2

PREVIEW - YOUFIXTHIS.COM

Download full manual at youfixthis.com

Tool "F"

Dimension	Measurement
A	∅128 mm (5.0394 in)
B	∅158 mm (6.2205 in)
C	150 mm (5.9055 in)

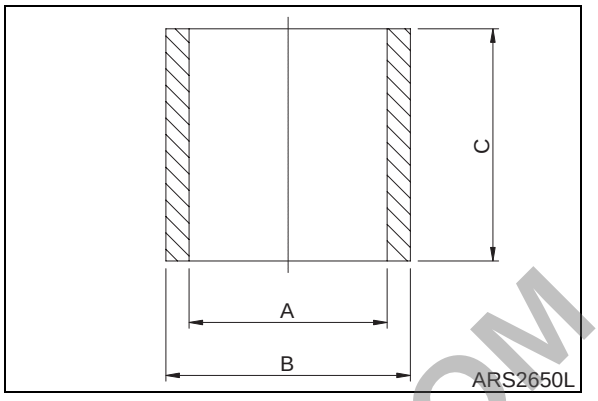

Figure 7

PREVIEW - YOUFIXTHIS.COM

Download full manual at youfixthis.com

4. Detach O-rings (2, Figure 32) from the axle.
5. Separate group seals (6, Figure 32) from the collar and roller (5).
6. Detach collar (3, Figure 32) and O-rings (2) from the axle, using a press.

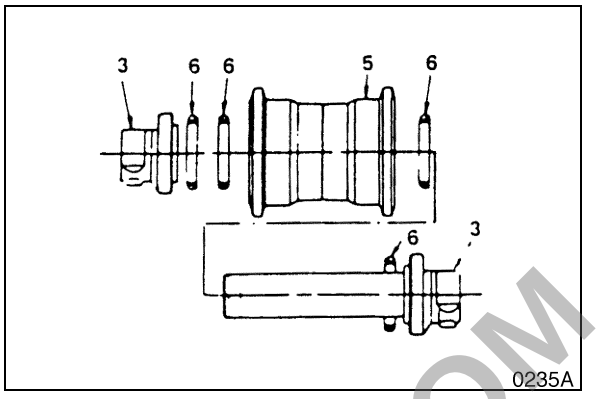

Figure 32

LOWER ROLLER REASSEMBLY

1. Degrease, clean and dry all parts before reassembly. Insert bushing (7, Figure 33) into roller.
2. Apply grease to the O-rings (2, Figure 33) and insert into axle.

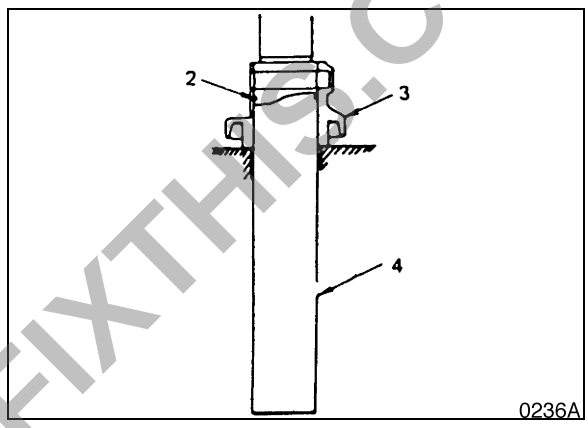

Figure 33

3. Align collar (3, Figure 34) and axle (4) pin holes and pin (1) the collar.

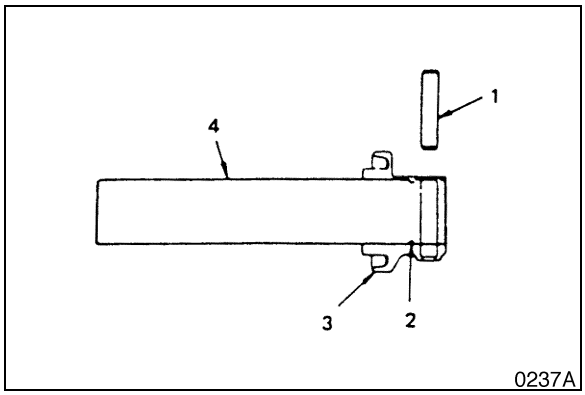

Figure 34

PREVIEW - YOUFIXTHIS.COM

Download full manual at youfixthis.com

DAEWOO
DAEWOO HEAVY INDUSTRIES & MACHINERY LTD.

DRIVE COUPLING (MAIN PUMP)

⚠ CAUTION!

Follow all safety recommendations and safe shop practices outlined in the front of this manual or those contained within this section.

Always use tools and equipment that is in good working order.

Use lifting and hoisting equipment capable of safely handling load.

Remember, that ultimately safety is your own personal responsibility.

MODEL	SERIAL NUMBER RANGE
Solar 300LC-V	1001 and Up
Solar 300LL	1001 and Up
Solar 340LC-V	1001 and Up
Solar 420LC-V	1001 and Up
Solar 470LC-V	1001 and Up

PREVIEW - YOUFIXTHIS.COM

Copyright 2002 Daewoo

May 2002

Download full manual at youfixthis.com

Problem	Possible Causes	Remedies
Sluggish performance of all hydraulic functions – attachment, swing and travel.	Main pump(s) damaged or worn.	Repair or replace.
	Main relief valve pressure off.	Readjust pressure.
	Low oil level in hydraulic system.	Refill.
	Hydraulic reservoir intake strainer clogged.	Clean.
	Pump inlet (supply side) piping or hose allowing air into hydraulic system.	Tighten connection.
Oil temperature abnormally high.	Oil cooler clogged or air circulation to cooler blocked.	Clean.
	Cooling fan belt tension too loose.	Readjust belt tension.
	Relief valve set too low.	Readjust valve.
	Relief valve in constant use.	Reduce or slow work load or cycling rate.
	Hydraulic oil severely neglected or incorrect for application.	Replace oil.
One circuit in hydraulic system inoperable.	Overload relief valve malfunction.	Readjust or replace.
	Oil leak at make-up valve.	Clean, repair.
	Control valve spool damaged.	Repair or replace.
	Dirt in control valve spool.	Clean or replace.
	Actuator (joystick, foot pedal) damaged or worn.	Repair or replace.
	Internal seal leak in cylinder.	Repair or replace.
	Cylinder rod damaged.	Repair or replace.
	Pilot valve or piping malfunction.	Repair or replace.
	Mechanical linkage frozen, loose or damaged.	Repair or replace.
Travel motors inoperable.	Center joint damaged.	Repair or replace.
	Parking brake not releasing.	Repair or replace.
	Travel motor worn or damaged.	Repair or replace.
	Travel motor pilot piping damaged.	Repair or replace.
Travel motors operate very slowly.	Track tension poorly adjusted Low oil in idlers or rollers.	Readjust tension Refill.
	Travel brake dragging.	Repair.
	Track frame out of alignment, deformed or twisted.	Repair.
Swing motor inoperable.	Swing brake not releasing.	Repair or replace.
	Relief valve malfunction.	Repair or replace.
	Pilot piping damaged.	Repair or replace.

PREVIEW - YOUFIXTHIS.COM

Download full manual at youfixthis.com

MODEL	CYLINDER	øA $^{-0.2}_{-0.3}$	øB $^{-0.2}_{-0.3}$	C $^{0}_{-0.1}$	D	MODEL (CYLINDER)
DD80L	TILT	35.0 mm (1.38 in)	47.0 mm (1.85 in)	0	6.0 mm (0.24 in)	
	DOZER	45.0 mm (1.77 in)	57.0 mm (2.24 in)	0.5 mm (0.02 in)	6.0 mm (0.24 in)	DD80L (ANGLE)
	ANGLE	45.0 mm (1.77 in)	57.0 mm (2.24 in)	0.5 mm (0.02 in)	6.0 mm (0.24 in)	
S55-V	ARM	55.0 mm (2.17 in)	69.0 mm (2.72 in)	5.0 mm (0.20 in)	6.0 mm (0.24 in)	
	BOOM	55.0 mm (2.17 in)	69.0 mm (2.72 in)	5.0 mm (0.20 in)	6.0 mm (0.24 in)	
	BOOM (OP)	55.0 mm (2.17 in)	69.0 mm (2.72 in)	5.0 mm (0.20 in)	6.0 mm (0.24 in)	
	BUCKET	55.0 mm (2.17 in)	69.0 mm (2.72 in)	5.0 mm (0.20 in)	6.0 mm (0.24 in)	
	SWING	40.0 mm (1.58 in)	52.0 mm (2.05 in)	3.5 mm (0.14 in)	6.0 mm (0.24 in)	S55W-V (SWING)
	DOZER	60.0 mm (2.36 in)	74.0 mm (2.91 in)	7.0 mm (0.28 in)	6.0 mm (0.24 in)	
S70-III	ARM	65.0 mm (2.56 in)	79.0 mm (3.11 in)	5.5 mm (0.22 in)	6.0 mm (0.24 in)	S80W-III (ARM)
	BOOM	70.0 mm (2.76 in)	84.0 mm (3.31 in)	5.5 mm (0.22 in)	6.0 mm (0.24 in)	S80W-III (BOOM) S130W-V (BOOM) S130LC-V (BOOM) MEGA 160-III (BUCKET)
	BUCKET	55.0 mm (2.17 in)	69.0 mm (2.72 in)	5.0 mm (0.20 in)	6.0 mm (0.24 in)	S55-V (ARM, BOOM, BOOM (OP), BUCKET) S55W-V (ARM) S80W-III (BUCKET) MEGA 130-III (LIFT)
	DOZER	60.0 mm (2.36 in)	74.0 mm (2.91 in)	5.0 mm (0.20 in)	6.0 mm (0.24 in)	S55W-V 9BOOM) MEGA 130-III (BUCKET) MEGA 160-III (LIFT) MEGA 200-III TC (BUCKET)
S80-III	DOZER	60.0 mm (2.36 in)	74.0 mm (2.91 in)	7.0 mm (2.28 in)	6.0 mm (0.24 in)	S55-V (DOZER) S55W-V (DOZER)
S130LC-V	ARM	80.0 mm (3.15 in)	94.0 mm (3.70 in)	6.0 mm (0.24 in)	7.0 mm (2.28 in)	S170W-V (BOOM) S220N-V (BOOM (OP))
	BOOM	70.0 mm (2.76 in)	84.0 mm (3.31 in)	6.0 mm (0.24 in)	7.0 mm (2.28 in)	
	BOOM (OP)	75.0 mm (2.95 in)	89.0 mm (3.50 in)	6.0 mm (0.24 in)	7.0 mm (2.28 in)	
S220LC-V	ARM	95.0 mm (3.74 in)	109.0 mm (4.29 in)	6.0 mm (0.24 in)	7.0 mm (2.28 in)	S220N-V (ARM(OP)) S290LC-V (BOOM) S300LC-V (BOOM)
	BOOM	85.0 mm (3.35 in)	99.0 mm (3.90 in)	6.0 mm (0.24 in)	7.0 mm (2.28 in)	
	BUCKET	75.0 mm (2.95 in)	89.0 mm (3.50 in)	6.0 mm (0.24 in)	7.0 mm (2.28 in)	

PREVIEW - YOUFIXTHIS.COM

Download full manual at youfixthis.com

Problem	Possible Cause	Remedy
Torque is poor and Abnormal noise	Sliding surface parts worn or damaged	Open inlet and outlet port of motor, apply pilot pressure of 3.9 - 4.9 Mpa to brake release port, and then check the turning of output shaft with torque of about 30 - 40 Nm over one revolution smoothly. If it does not turn smoothly with the torque described above, it is necessary to disassemble and check it because the possibility of damage is large. Check the parts of the articles from (a) to (e) of “Inspection Parts List” on page -18 and bearings and replace if they are abnormal.
	Setting pressure of relief valve in circuit poor	Check load pressure by pressure gauge. Reset it to setting pressure.
	Motor internal damaged	Check whether metallic foreign material is in fluid drain of motor and drain filter. If metallic material is found, disassemble and check motor internal because the possibility of its damage is large. Repair or replace damaged parts. Replace motor.
	Air in fluid mixed	Check fluid in tank and motor case. Bleed air fully.
	Fastening parts loose	Check pipe laying parts, fastening part bolts, motor fastening bolts, and each motor fastening part bolts. Fasten suitable tightening torque.
Abnormal heat	Motor sliding and rotating parts stuck	Check whether metallic foreign material is in motor fluid drain and drain filter, and check the turning of output shaft with torque of about 30 - 40 Nm over one revolution smoothly. If metallic material is found or it does not turn smoothly with the torque described at left, it is necessary to disassemble and check it because the possibility of damage is large. Repair or replace damaged parts. Replace motor.
Assembling parts leaking	O-ring damaged	Replace O-ring.
	Seal surface damaged	Repair seal surface or replace seal.
	Bolt loose	Check bolts Fasten suitable tightening torque. Repair or Replace motor.
Oil seal leaking	Oil seal lip part damaged or worn	Check pressure in case and drain quantity.
	Shaft seal part damaged or worn	Pressure in case is made lower than 0.3Mpa. If drain is high, disassemble and check it.
	Pressure of case abnormal	Replace oil seal. Repair or replace damaged parts. Replace motor assembly.

PREVIEW - YOUFIXTHIS.COM

Download full manual at youfixthis.com

Hydraulic Motor Part

Tool name	B Dimension	Applying part name
Hex L- wrench	4 mm	Plug (461), Orifice, Screw (545, 546)
	8 mm	Hex Socket Bolt (367), Plug (571)
	10 mm	Hex Socket Bolt (368)
	14 mm	Hex Socket Bolt (401, 402)
Socket wrench spanner	19 mm	Hp Plug (567)
	27 mm	Hp Plug (464)
	36 mm	Relief Valve (350)
Snap ring pliers (For hole or shaft)		Stop Ring (107, 108)
Plastic hammer (Also wood hammer is possible)		
Steel bar (7x7x200)		Needle Bearing (103), Pin (451, 709)
Monkey spanner		
Torque wrench		Nominal Dimension: 500 mm, 3000 mm
Driver		
Jig for assembling of oil seal		Oil Seal (491)
Induction heating device for bearing		Roller Bearing (102)
Bearing puller		Roller Bearing (102)
Jig for disassembling of motor		
Seal tape		

PREVIEW - YOUFIXTHIS.COM

Download full manual at youfixthis.com

SPECIFICATIONS

Item		Specification
Size		140
Displacement		140 cm^3/ rev
Pressure	Rated	34.3 MPa (350 kg/cm^2)
	Max.	37.7 MPa (385 kg/cm^2)
Speed	Max. *1	2,500 min^{-1}
	Max. for self-priming *2	2,150 min^{-1}
Weight	Single	
	Double	130 kg
Working Oil	Type	Mineral working oil
	Oil temp range	-20 ~ +95 °C
	Oil viscosity range	10~1,000 cSt (mm^2/s)
	Recommended filter	10μm

*1 These are the maximum speeds for the closed-circuit specifications. For the closed-circuit specifications, consult us in advance.

*2 These are the speeds when the suction pressure is 0 kg/cm^2 (0 psi).

PREVIEW - YOUFIXTHIS.COM

Download full manual at youfixthis.com

6. Remove hexagon socket head screws (436, 438) and pilot cover (641). After removing pilot cover, remove set spring (655) from pilot section.

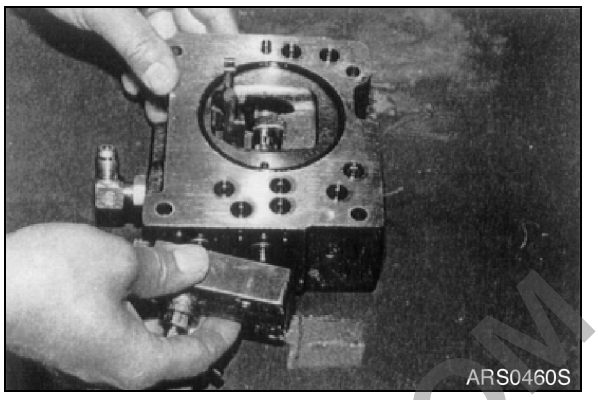

Figure 35

7. Remove snap ring (814), spring seat (653), return spring (654) and sleeve (651).

IMPORTANT
Sleeve (651) is attached with snap ring (836). **When removing snap ring (814), return spring (654) may pop out. Take care not to lose it.**

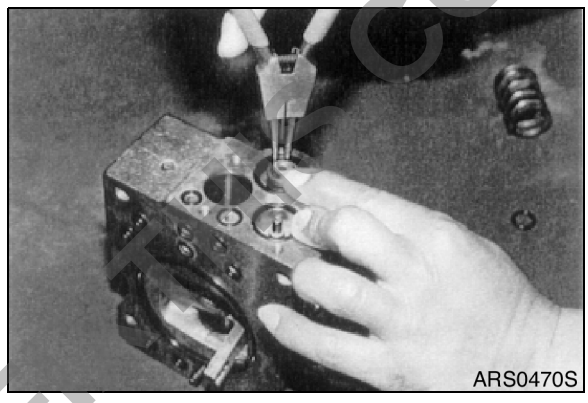

Figure 36

8. Remove locking ring (858), fulcrum plug (614) and adjusting plug (615).

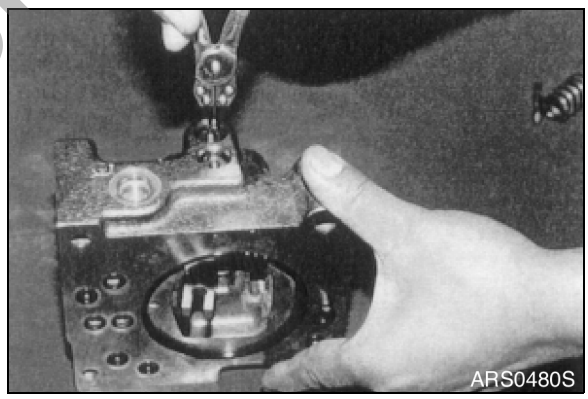

Figure 37

IMPORTANT
Fulcrum plug (614) and adjusting plug (615) can be easily taken out with M6 bolt.

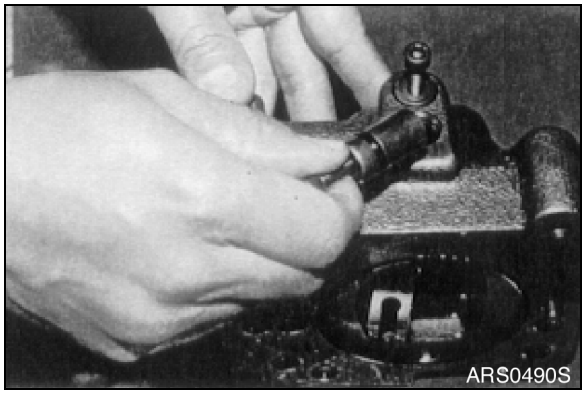

Figure 38

PREVIEW - YOUFIXTHIS.COM

Download full manual at youfixthis.com

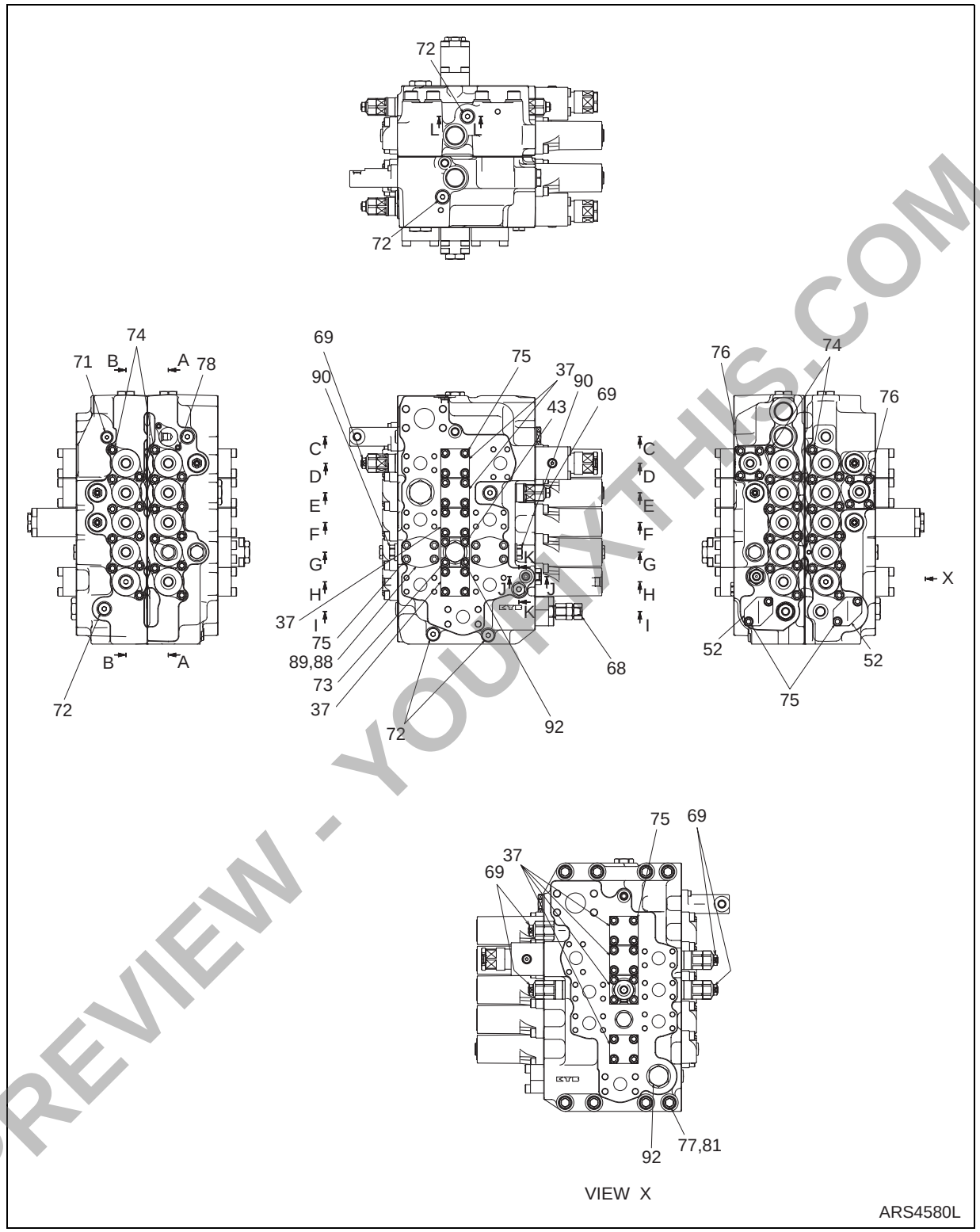

Figure 32

PREVIEW - YOUFIXTHIS.COM

Download full manual at youfixthis.com

19. Remove four bolts (3, Figure 7) and cover (2), and pull remote control valve RH (1) out.

20. Tag and disconnect hoses from remote control valve RH (1, Figure 7). Plug and cap hoses and ports to prevent contamination from entering hydraulic system or component.

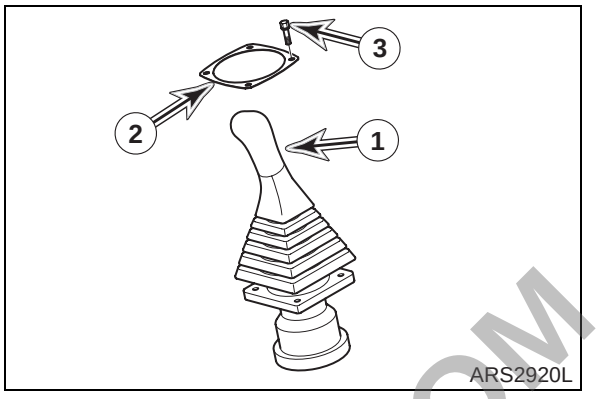

Figure 7

PREVIEW - YOUFIXTHIS.COM

Download full manual at youfixthis.com

START-UP PROCEDURES

1. Start engine and set throttle at "LOW IDLE."
2. Set safety lever on "UNLOCK" position.

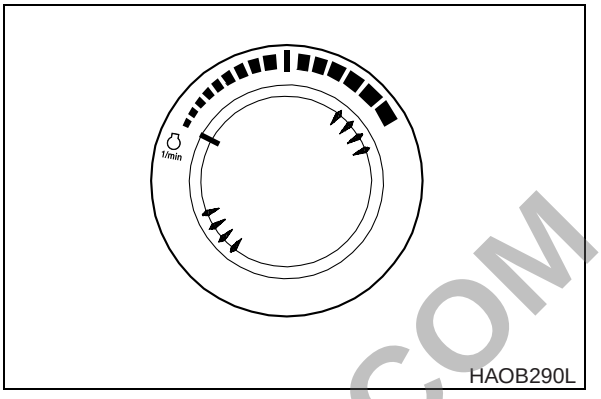

Figure 52

3. Slowly push and pull both travel lever about five times without a load to vent air from pilot lines.

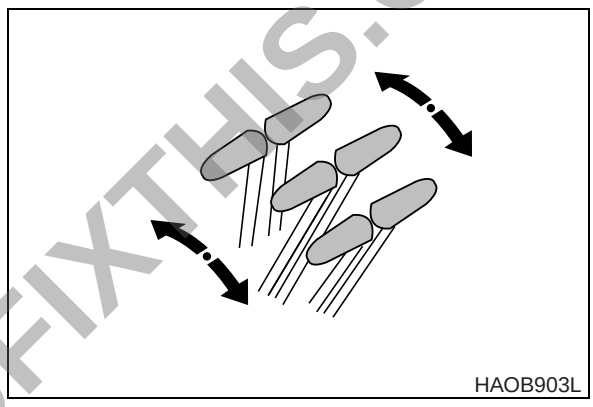

Figure 53

PREVIEW - YOUFIXTHIS.COM

Download full manual at youfixthis.com

SPECIAL MENU

In this menu, many types of operating conditions and functions can be accessed and disp[layed, including the e-EPOS controller. This menu is mainly used for machine testing and failure diagnostics.

The special menu offers three sub-menus;

1. Machine status.
2. Failure information.
3. Information on machine operation

ENTERING/ACCESSING AND EXITING/ESCAPING MENUS

Entering/Accessing Menus

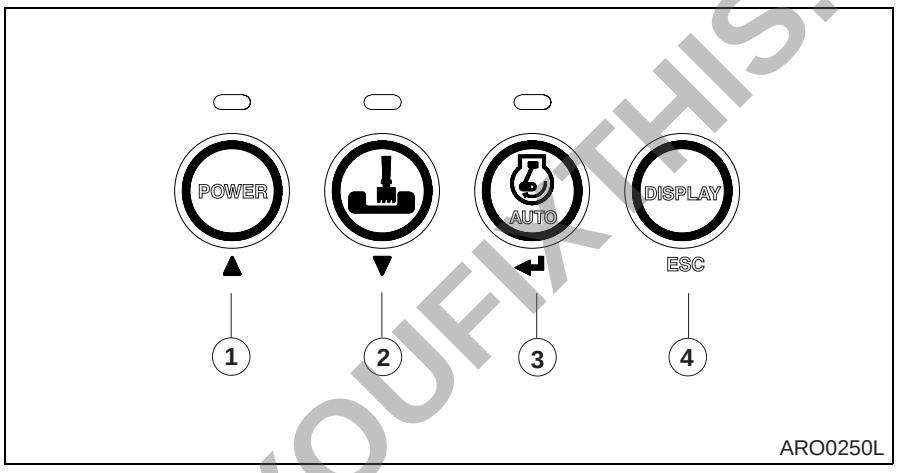

Figure 18

When normal mode screen is displayed, if the enter button (↵, 3) and escape button (ESC, 4) are pressed simultaneously for more than 3 seconds, normal mode screen (Figure 19) will be changed to special menu screen (Figure 20).

Normal Mode Screen

NOTE: *Normal mode screen can display many kinds of display mode by selecting, for example, engine revolution (RPM), battery voltage (V), front pump pressure (BAR), rear pump pressure (BAR) and so on by selecting.*

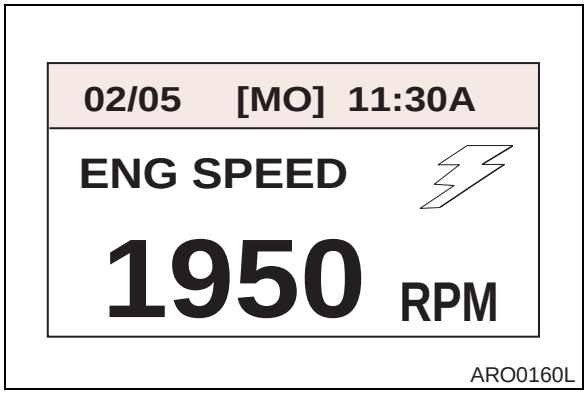

Figure 19

PREVIEW . YOUFIXTHIS.COM

Download full manual at youfixthis.com

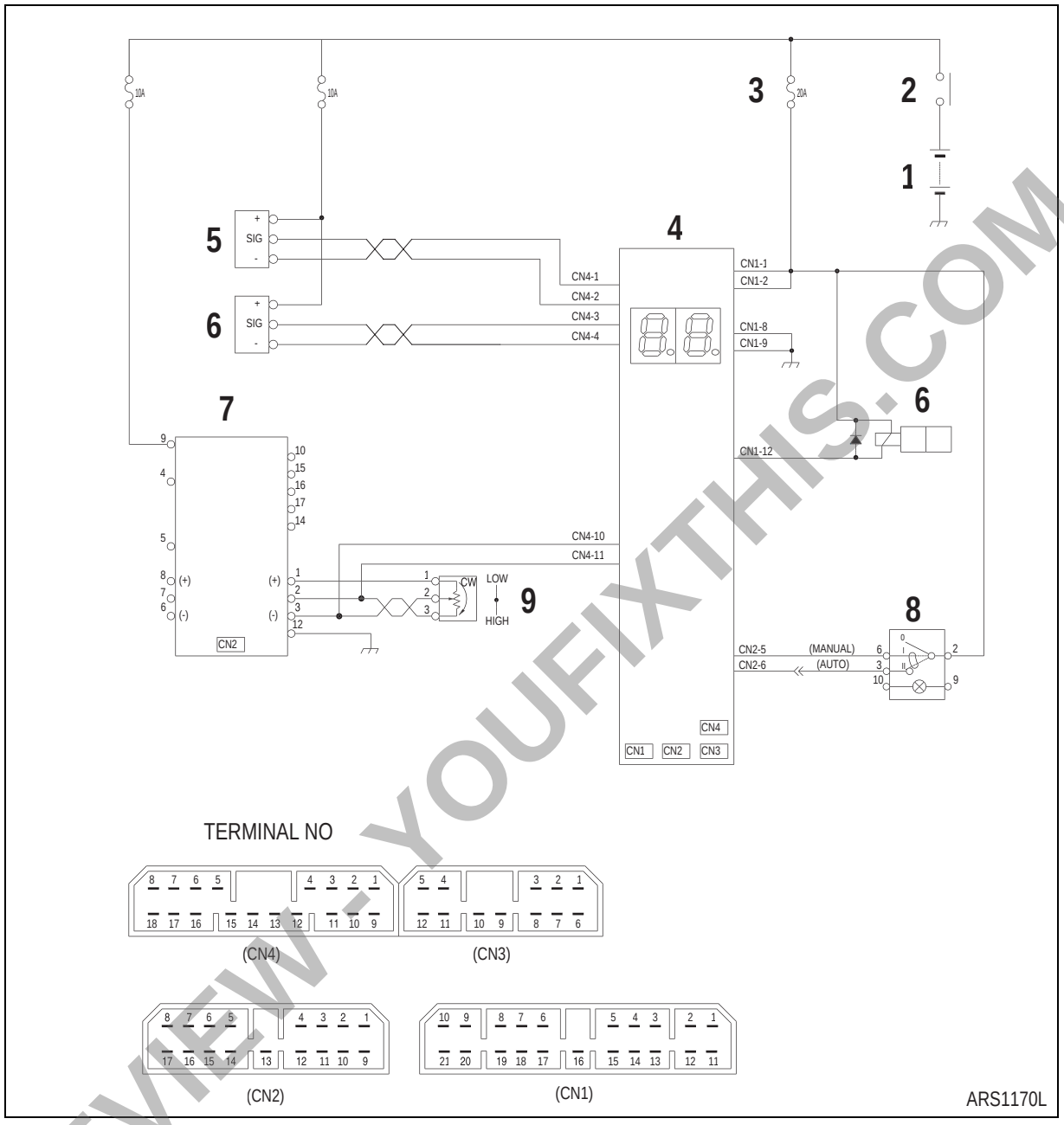

Figure 61

Reference Number	Description
1	Battery
2	Battery Relay
3	Fuse
4	e-EPOS Controller
5	Pressure Sensor (Front Pump)

Reference Number	Description
6	Pressure Sensor (Rear Pump)
7	Engine Throttle Controller
8	Automatic Travel Select Switch
9	Engine Control Dial
10	Solenoid Valve (High Speed)

PREVIEW - YOUFIXTHIS.COM

Download full manual at youfixthis.com

PREVIEW ONLY

You're viewing 25 of 658 pages

The full manual includes:

- All 658 pages, complete
- Searchable PDF (find any keyword)
- No watermarks
- Instant download
- Print-ready quality

GET FULL MANUAL NOW

Daewoo Solar 300LC-V Shop Manual

Scan or click anywhere
youfixthis.com

Click anywhere on this page to get the full manual