GENERAL SPECIFICATIONS

COMPONENT			SPECIFICATION
Equipment weight (without grapple)			35.64 metric tons (39.29 tons)
Engine	Model		DE08TIS
	Style		Water cooled - 6 cylinders
	Rated output		200 ps @ 1,900 rpm (197 hp @ 1,900 rpm)
	Maximum torque		86 kg•m @ 1,300 rpm (622 lb ft @ 1,300 rpm)
	Fuel tank capacity		435 liters (114.84 U.S. gal.)
Hydraulic pump	Style		Axial piston
	Discharging pressure		350 kg/cm^2 (4,978.17 psi)
	Maximum discharge quantity		2 x 247 liters/minutes (2 x 65.2 U.S. GPM)
	Hydraulic oil tank capacity		205 liters (54.12 U.S. gal.)
Performance	Swing speed		10.1 rpm
	Travel speed	High speed	3.11 MPH (5.0 km/h)
		Low speed	1.92 MPH (3.1 km/h)
	Traction force	High speed	16.8 metric tons (18.5 tons)
		Low speed	27.9 metric tons (30.7 tons)
	Gradeability		35° (70% slope)
	Ground pressure		0.57 kg/cm^2 (8.09 psi)
Ground clearance			773 mm (30.43 in)
Lever operation style			Hydraulic joystick
Upper roller			2 per track
Bottom roller			9 per track

PREVIEW - YOUFIXTHIS.COM

Download full manual at youfixthis.com

DAEWOO
DAEWOO HEAVY INDUSTRIES & MACHINERY LTD.

GENERAL MAINTENANCE PROCEDURES

⚠ CAUTION!

Follow all safety recommendations and safe shop practices outlined in the front of this manual or those contained within this section.

Always use tools and equipment that is in good working order.

Use lifting and hoisting equipment capable of safely handling load.

Remember, that ultimately safety is your own personal responsibility.

MODEL	SERIAL NUMBER RANGE
ALL MODELS	ALL RANGES

PREVIEW - YOUFIXTHIS.COM

Copyright 2002 Daewoo

May 2002

Download full manual at youfixthis.com

REMOVAL

⚠ CAUTION!

Avoid disassembling cab if there are strong wind gusts, which could catch large surface area of cab shell and push it sideways during lift.

1. Park on firm and level ground.
2. Lower front attachment (bucket) to ground.
3. Shut down engine.
4. Set safety lever on "RELEASED" position.
5. Turn starter switch "ON."

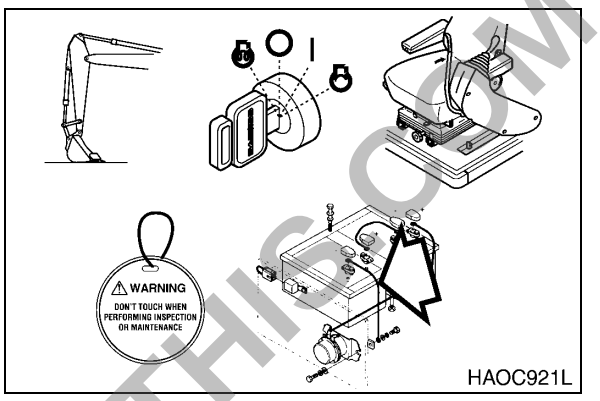

Figure 1

⚠ WARNING!

If engine must be running while performing maintenance, always use extreme caution. Always have one person in the cab at all times. Never leave the cab with engine running.

6. Fully stroke work levers (joysticks) in all directions to relieve any pressure from the accumulators.
7. Set safety lever on "LOCK" position.
8. Turn key to "OFF" position and remove from starter switch.
9. Hang a maintenance warning tag on controls.
10. Disconnect the battery cable from the negative (-) battery terminal.
11. Prepare cab shell for removal by disconnecting wiring connectors for:
    A. Cab interior lighting.
    B. External light wiring.
    C. Radio antenna and connections.
    D. Wiper/washer connections.

NOTE: *Control console wiring harnesses and hydraulic piping lines that pass through the floor of the cab do not need to be disassembled.*

NOTE: *If unit is equipped with a cab protective structure (for forestry, or hazardous working conditions), it must be removed.*

PREVIEW - YOUFIXTHIS.COM

Download full manual at youfixthis.com

GENERAL DESCRIPTION

Schematic(s) presented in this section are laid out on facing pages.

An overlapping edge has been taken into consideration so that a photocopy can be made and pasted together to make a complete schematic.

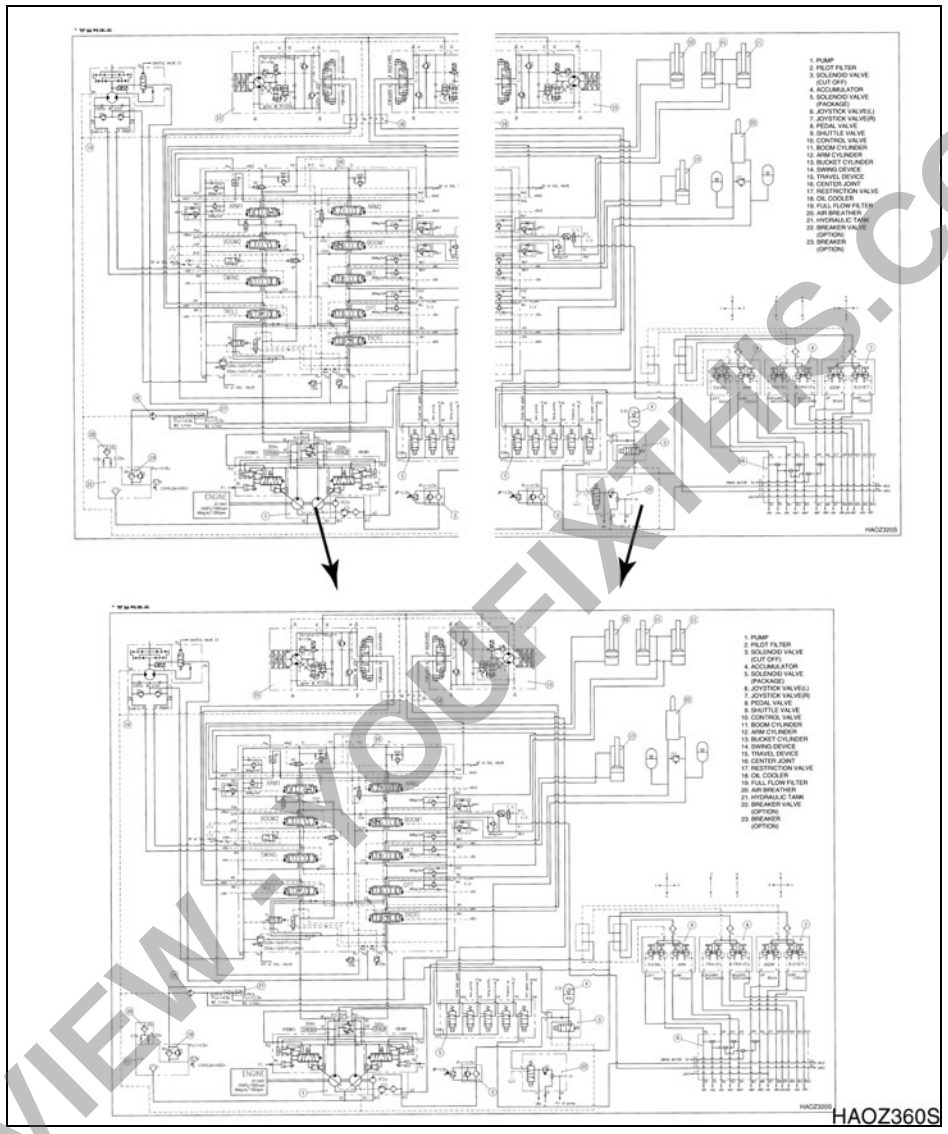

Figure 1

PREVIEW - YOUFIXTHIS.COM

Download full manual at youfixthis.com

Symptoms	Possible Causes	Remedies
1. No rotation and –		
a. Pressure at swing motor inlet *increases*	Swing brake not releasing	Check brake engagement and disengagement, check release pressure
	Internal damage to gearbox drive train	Replace broken gears, drive train assemblies
	Overload	Reduce load weight
b. Pressure at swing motor inlet shows *no increase,* **and** the swing motor is making irregular noises	Swing motor drive shaft damage	Replace swing motor
	Internal damage to gearbox drive train	Repair/replace broken or faulty assemblies
c. Pressure at swing motor inlet shows *no increase,* but **without** irregular *noises* from the swing motor	Hydraulic pump or valve broken	Troubleshoot hydraulic system
2. Oil leakage		
a. From drive shaft	Oil seal damaged	Replace oil seal
b. From bolted connections or other assembled surfaces	Assembly compound (joint sealer) old and not sealing, bolt not tight or flange warped	Disassemble and check mating surfaces. Reapply Loctite, torque bolts to specifications
3. Excess heat		
Gearbox casing becomes excessively hot, with or without irregular noise(s) during operation	Low oil level	Replace oil, refill to specified level
	Bearings or gear worn but not completely inoperative	Repair or replace gearbox

HAOE960L

PREVIEW - YOUFIXTHIS.COM

Download full manual at youfixthis.com

TORQUE VALUES FOR STANDARD METRIC FASTENERS

NOTE: *The units for the torque values are kg•m (ft lb).*

Dia. x Pitch (mm)	Grade										
	3.6 (4A)	4.6 (4D)	4.8 (4S)	5.6 (5D)	5.8 (5S)	6.6 (6D)	6.8 (6S)	6.9 (6G)	8.8 (8G)	10.9 (10K)	12.9 (12K)
M5 x Std.	0.15 (1.08)	0.16 (1.15)	0.25 (1.80)	0.22 (1.59)	0.31 (2.24)	0.28 (2.02)	0.43 (3.11)	0.48 (3.47)	0.50 (3.61)	0.75 (5.42)	0.90 (6.50)
M6 x Std.	0.28 (2.02)	0.30 (2.16)	0.45 (3.25)	0.40 (2.89)	0.55 (3.97)	0.47 (3.39)	0.77 (5.56)	0.85 (6.14)	0.90 (6.50)	1.25 (9.04)	1.50 (10.84)
M7 x Std.	0.43 (3.11)	0.46 (3.32)	0.70 (5.06)	0.63 (4.55)	0.83 (6.00)	0.78 (5.64)	1.20 (8.67)	1.30 (9.40)	1.40 (10.12)	1.95 (14.10)	2.35 (16.99)
M8 x Std.	0.70 (5.06)	0.75 (5.42)	1.10 (7.95)	1.00 (7.23)	1.40 (10.12)	1.25 (9.04)	1.90 (13.74)	2.10 (15.18)	2.20 (15.91)	3.10 (22.42)	3.80 (27.48)
M8 x 1	0.73 (5.28)	0.80 (5.78)	1.20 (8.67)	1.00 (7.23)	1.50 (10.84)	1.35 (9.76)	2.10 (15.18)	2.30 (16.63)	2.40 (17.35)	3.35 (24.23)	4.10 (29.65)
M10 x Std.	1.35 (9.76)	1.40 (10.12)	2.20 (15.91)	1.90 (13.74)	2.70 (19.52)	2.35 (19.99)	3.70 (26.76)	4.20 (30.37)	4.40 (31.18)	6.20 (44.84)	7.20 (52.07)
M10 x 1	1.50 (10.84)	1.60 (11.57)	2.50 (18.08)	2.10 (15.18)	3.10 (22.42)	2.80 (20.25)	4.30 (31.10)	4.90 (35.44)	5.00 (36.16)	7.00 (50.63)	8.40 (60.75)
M12 x Std.	2.40 (17.35)	2.50 (18.08)	3.70 (26.76)	3.30 (23.86)	4.70 (33.99)	4.20 (30.37)	6.30 (45.56)	7.20 (52.07)	7.50 (54.24)	10.50 (75.94)	12.50 (90.41)
M12 x 1.5	2.55 (18.44)	2.70 (19.52)	4.00 (28.93)	3.50 (25.31)	5.00 (36.16)	4.50 (32.54)	6.80 (49.18)	7.70 (55.69)	8.00 (57.86)	11.20 (81.00)	13.40 (96.92)
M14 x Std.	3.70 (26.76)	3.90 (28.20)	6.00 (13.23)	5.20 (37.61)	7.50 (54.24)	7.00 (50.63)	10.00 (72.33)	11.50 (83.17)	12.00 (86.79)	17.00 (122.96)	20.00 (144.66)
M14 x 1.5	4.10 (29.65)	4.30 (31.10)	6.60 (47.73)	5.70 (41.22)	8.30 (60.03)	7.50 (54.24)	11.10 (80.28)	12.50 (90.41)	13.00 (94.02)	18.50 (11.26)	22.00 (158.12)
M16 x Std.	5.60 (40.50)	6.00 (43.39)	9.00 (65.09)	8.00 (57.86)	11.50 (83.17)	10.50 (75.94)	15.50 (112.11)	17.90 (129.47)	18.50 (133.81)	26.00 (188.05)	31.00 (224.22)
M16 x 1.5	6.20 (44.84)	6.50 (47.01)	9.70 (70.16)	8.60 (62.20)	12.50 (90.41)	11.30 (81.73)	17.00 (122.96)	19.50 (141.04)	20.00 (144.66)	28.00 (202.52)	35.50 (256.77)
M18 x Std.	7.80 (56.41)	8.30 (60.03)	12.50 (90.41)	11.00 (79.56)	16.00 (115.72)	14.50 (104.87)	21.00 (151.89)	27.50 (198.90)	28.50 (206.14)	41.00 (296.55)	43.00 (311.01)
M18 x 1.5	9.10 (65.82)	9.50 (68.71)	14.40 (104.15)	12.50 (90.41)	18.50 (133.81)	16.70 (120.79)	24.50 (177.20)	27.50 (198.90)	28.50 (206.14)	41.00 (296.55)	49.00 (354.41)
M20 x Std.	11.50 (83.17)	12.00 (86.79)	18.00 (130.19)	16.00 (115.72)	22.00 (159.12)	19.00 (137.42)	31.50 (227.83)	35.00 (253.15)	36.00 (260.38)	51.00 (368.88)	60.00 (433.98)
M20 x 1.5	12.80 (92.58)	13.50 (97.64)	20.50 (148.27)	18.00 (130.19)	25.00 (180.82)	22.50 (162.74)	35.00 (253.15)	39.50 (285.70)	41.00 (296.55)	58.00 (419.51)	68.00 (491.84)
M22 x Std.	15.50 (112.11)	16.00 (115.72)	24.50 (177.20)	21.00 (151.89)	30.00 (216.99)	26.00 (188.05)	42.00 (303.78)	46.00 (332.71)	49.00 (354.41)	67.00 (484.61)	75.00 (542.47)
M22 x 1.5	17.00 (122.96)	18.50 (133.81)	28.00 (202.52)	24.00 (173.59)	34.00 (245.92)	29.00 (209.75)	47.00 (339.95)	52.00 (44.76)	56.00 (405.04)	75.00 (542.47)	85.00 (614.80)
M24 x Std.	20.50 (148.27)	21.50 (155.50)	33.00 (238.68)	27.00 (195.29)	40.00 (289.32)	34.00 (245.92)	55.00 (397.81)	58.00 (419.51)	63.00 (455.67)	82.00 (593.10)	92.00 (655.43)
M24 x 1.5	23.00 (166.35)	35.00 (253.15)	37.00 (267.62)	31.00 (224.22)	45.00 (325.48)	38.00 (202.52)	61.00 (441.21)	67.00 (484.61)	74.00 (535.24)	93.00 (672.66)	103.00 (744.99)

PREVIEW - YOUFIXTHIS.COM

Download full manual at youfixthis.com

AIR-CONDITIONING SYSTEM CIRCUIT DIAGRAM

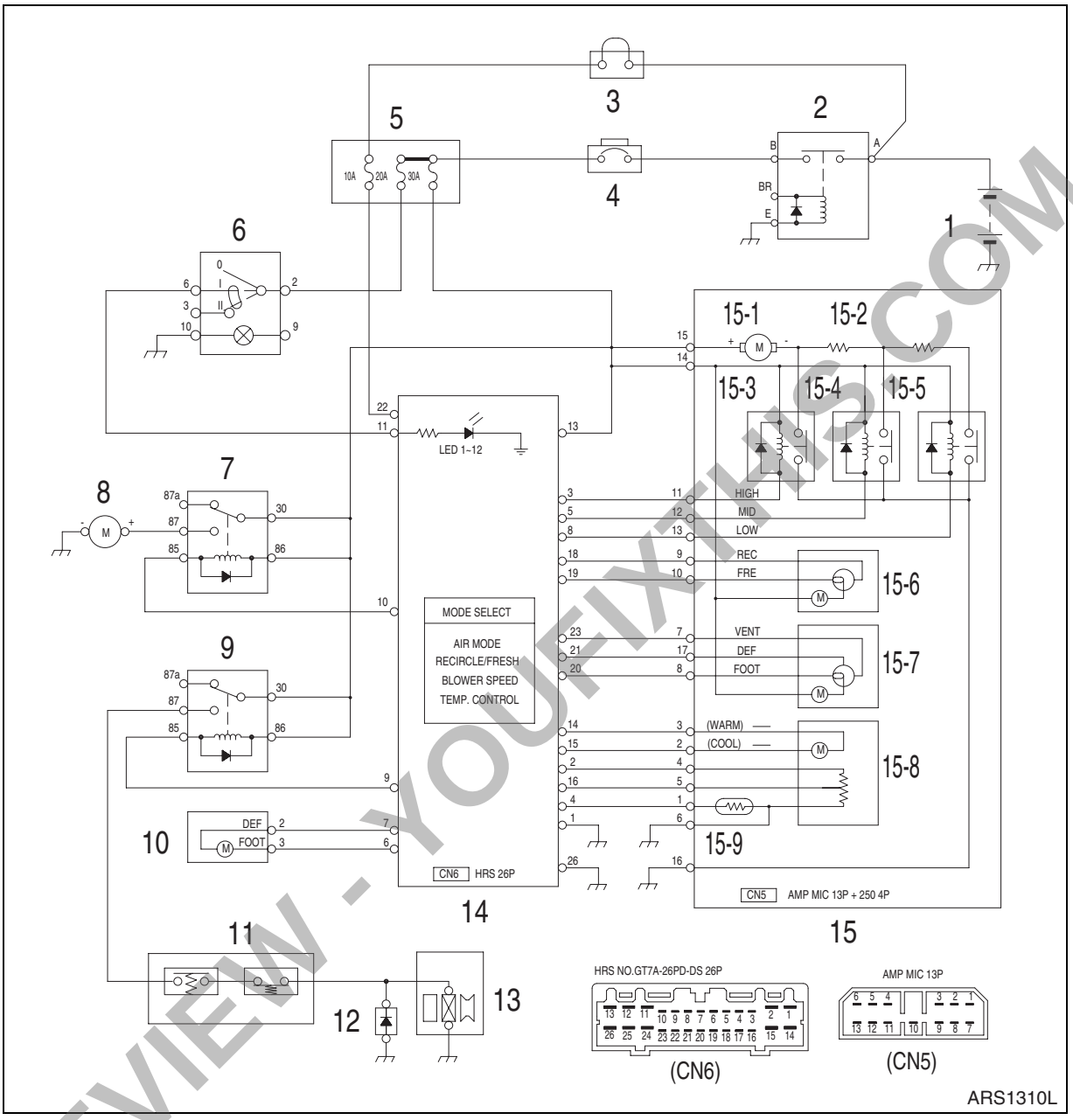

Figure 13

PREVIEW - YOUFIXTHIS.COM

Download full manual at youfixthis.com

GENERAL DESCRIPTION

Schematic(s) presented in this section are laid out on facing pages.

An overlapping edge has been taken into consideration so that a photocopy can be made and pasted together to make a complete schematic.

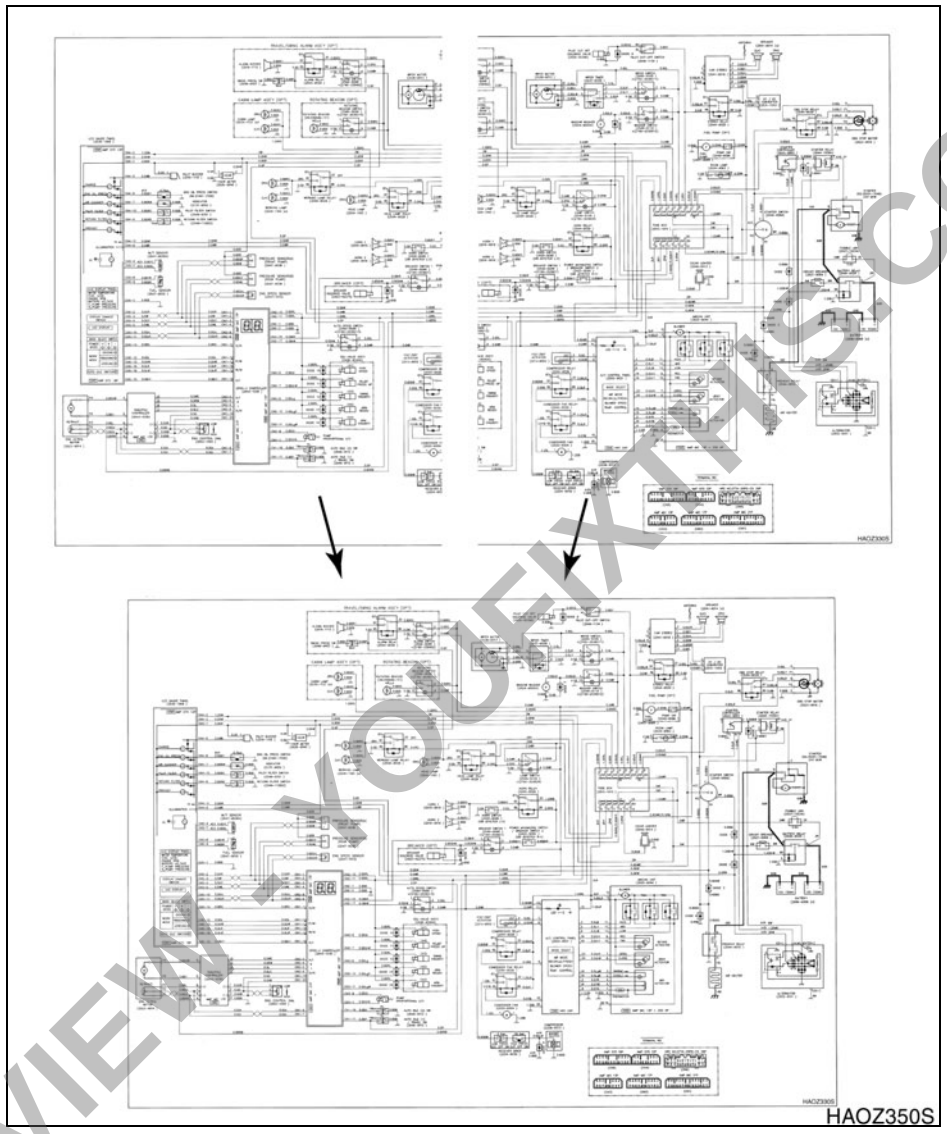

Figure 1

PREVIEW - YOUFIXTHIS.COM

Download full manual at youfixthis.com

TABLE OF CONTENTS

Publication Request for Proposed Revision

Safety

Track Excavator Safety S0102015K

Specifications

Specifications for Solar 300LL S0202160K

General Maintenance

General Maintenance Procedures S0302000
Standard Torques S0309000

Upper Structure

Cab S0402040K
Counterweight S0403000
Fuel Tank ..... \S0405050
Fuel Transfer Pump S0405500
Swing Bearing S0407000
Swing Reduction Gear S0408070K

Lower Structure and Chassis

Track Assembly S0505010

Engine and Drive Train

Air Conditioner S0605060K
Drive Coupling (Main Pump) S0609010K

Hydraulics

Hydraulic System Troubleshooting, Testing and Adjustment S0702170K
Accumulator S0703010K

PREVIEW - YOUFIXTHIS.COM

Download full manual at youfixthis.com

DAEWOO
DAEWOO HEAVY INDUSTRIES & MACHINERY LTD.

TRACK EXCAVATOR SAFETY

⚠ CAUTION!

Follow all safety recommendations and safe shop practices outlined in the front of this manual or those contained within this section.

Always use tools and equipment that is in good working order.

Use lifting and hoisting equipment capable of safely handling load.

Remember, that ultimately safety is your own personal responsibility.

MODEL	SERIAL NUMBER RANGE
Solar 225LL	1001 and Up
Solar 300LL	1001 and Up

PREVIEW - YOUFIXTHIS.COM

Copyright 2004 Daewoo

June 2004

Download full manual at youfixthis.com

PREVIEW - YOUFIXTHIS.COM

Download full manual at youfixthis.com

DAEWOO
DAEWOO HEAVY INDUSTRIES & MACHINERY LTD.

SPECIFICATIONS FOR SOLAR 300LL

⚠ CAUTION!

Follow all safety recommendations and safe shop practices outlined in the front of this manual or those contained within this section.

Always use tools and equipment that is in good working order.

Use lifting and hoisting equipment capable of safely handling load.

Remember, that ultimately safety is your own personal responsibility.

MODEL	SERIAL NUMBER RANGE
Solar 300LL	1001 and Up

PREVIEW - YOUFIXTHIS.COM

Copyright 2004 Daewoo

April 2004

Download full manual at youfixthis.com

I. "Loctite" Fastener Adhesives

Product	Application	Color	Removal	Breakaway Cure Strength (in lb) of Sealer Alone
222	Low strength for 6 mm (1/4") or smaller fasteners.	Purple	Hand tools	45
242 or 243	Medium strength for 6 mm (1/4") and larger fasteners.	Blue	Hand tools	80
262	High strength for high grade fasteners subject to shock, stress and vibration.	Red	Heat/260°C (500°F) Remove HOT (NO solvent)	160
271	Extra high strength for fine thread fasteners up to 25 mm (1") diameter.	Red	Heat/260°C (500°F) Remove HOT	160
272	High temperature/high strength for hostile environments to 232°C (450°F).	Red	Heat/316°C (600°F) Remove HOT	180
277	Extra high strength for coarse thread fasteners 25 mm (1") diameter and larger.	Red	Heat/260°C (500°F) Remove HOT	210

II. "Loctite" Pipe Thread Sealant

Product	Application	Color	Removal	Required Setup
545	"No-filler/nonclog" formula for high-pressure hydraulic systems. Over application will not restrict or foul system components.	Purple	Hand tools	4 Hours (or 1/2 hour with Locquic "T" Primer)
656	Solvent resistant, higher viscosity tapered thread sealer.	White	Hand tools	4 Hours (or 1/2 hour with Locquic "T" Primer)

III. "Loctite" gasket/flange sealer

Product	Application	Color	Notes
518	Gasket eliminator specifically made for aluminum flanges/surfaces. For hydraulic systems to 34,475 kPa (5,000 psi).	Red	Use Locquic "N" primer for fast (1/2 - 4 hours) setup. Unprimed setup 4 - 24 hours.
504	Low-pressure/wide-gap gasket eliminator compound. Fills gaps to 0.0012 mm (0.030"), cures to rigid seal.	Orange	Use Locquic "N" primer for faster (1/2 - 4 hours) setup. Unprimed setup 4 - 24 hours.
515	General purpose, fast setup, flexible-cure gasket eliminator. For nonrigid assemblies subject to shock, vibration or deflection.	Purple	Use Locquic "N" primer for faster (1/4 - 2 hours) setup. Unprimed setup 1 - 12 hours.

PREVIEW - YOUFIXTHIS.COM

Download full manual at youfixthis.com

GENERAL DESCRIPTION

THEORY OF OPERATION

The swing motor final drive is a two-stage planetary gearbox with two planet gears, two sun gears and two-stage output reduction. The planetary gear engages with the ring gear. The pinion gear is connected with the output shaft and spline.

The final drive reduces swing motor rpm in order to increase swing motor output torque. The available maximum swing speed provides a fast turning rate for efficient, rapid work cycling with more than adequate power for good acceleration.

PREVIEW - YOUFIXTHIS.COM

Download full manual at youfixthis.com

DAEWOO
DAEWOO HEAVY INDUSTRIES & MACHINERY LTD.

AIR CONDITIONER

⚠ CAUTION!

Follow all safety recommendations and safe shop practices outlined in the front of this manual or those contained within this section.

Always use tools and equipment that is in good working order.

Use lifting and hoisting equipment capable of safely handling load.

Remember, that ultimately safety is your own personal responsibility.

MODEL	SERIAL NUMBER RANGE
Solar 140LC-V	1001 and Up
Solar 140W-V	1001 and Up
Solar 160W-V	1001 and Up
Solar 175LC-V	1001 and Up
Solar 180W-V	1001 and Up
Solar 210W-V	1001 and Up
Solar 225LC-V	1001 and Up
Solar 225NLC-V	1001 and Up
Solar 225LL	1001 and Up
Solar 255LC-V	1001 and Up
Solar 300LC-V	1001 and Up
Solar 300LL	1001 and Up
Solar 340LC-V	1001 and Up
Solar 420LC-V	1001 and Up
Solar 470LC-V	1001 and Up

PREVIEW - YOUFIXTHIS.COM

Copyright 2004 Daewoo

January 2004

Download full manual at youfixthis.com

RIGHT SWING OPERATING CIRCUIT

When the swing control lever is pushed to the right swing position, pilot pressure from the left side pilot valve is directed to the right side pump regulator and right half of the control valve. Output flow from the right pump is then directed through the PR and SWR ports of the control valve to the swing motor.

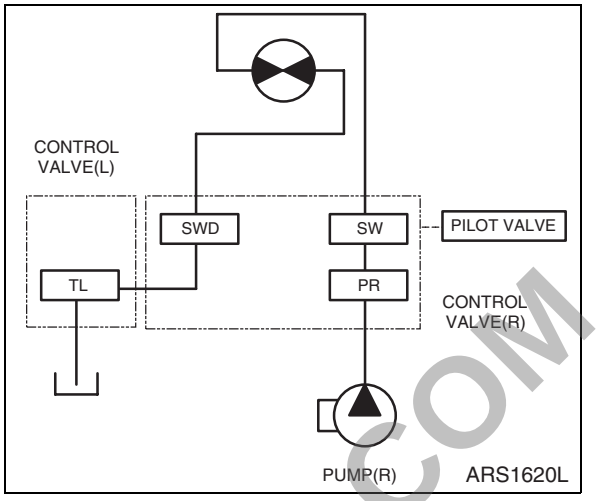

Figure 8

LEFT SWING OPERATING CIRCUIT

When the swing control lever is pushed to the left swing position, the control valve spool at the right side of the control valve moves in the opposite direction and output flow from the right pump is directed through the PR and SWL ports of the control valve to the swing motor.

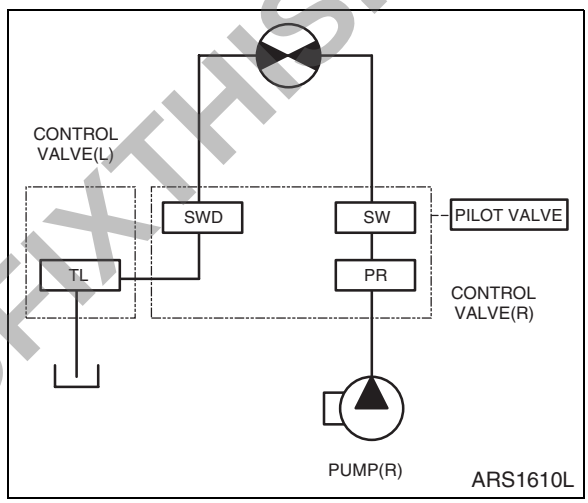

Figure 9

SWING RELIEF VALVE AND MAKEUP VALVE

Whenever the spool is shifted to the neutral mode during swing operation, the possibility exists that surge pressure in the circuit - caused by inertial momentum of the upper works and correspondingly reduced pressure at the opposite motor port - could produce cavitation in the circuit. To keep that from happening, a 285 kg/cm^2 (4,052 psi) relief valve is installed in the swing motor and a large capacity makeup valve is connected to the entrance port of the hydraulic reservoir, helping maintain acceptable pressures on both sides of the circuit.

TRAVEL OPERATING CIRCUIT

Output flow from both halves of the pump assembly is directed to the right and left travel motors through the right and left sides of the control valve, and the upper works center joint.

PREVIEW - YOUFIXTHIS.COM

Download full manual at youfixthis.com

Reference Number	Description
1	Bushing
2	Dust Wiper
3	Retaining Ring
4	U-packing
5	Buffer Seal
6	Rod Bushing
7	Bolt
8	Retaining Ring
9	Rod Cover
10	O-ring
11	O-ring
12	Backup Ring
13	Piston Rod
14	Cylinder Tube
15	Cushion Ring

Reference Number	Description
16	Piston
17	Slide Ring
18	Wear Ring
19	Slipper Seal
20	O-ring
21	Backup Ring
22	Piston Nut
23	Set Screw
24	Cushion Plunger
25	Bushing
26	Check Valve
27	Spring Support
28	Spring
29	Plug
30	Stop Ring

PREVIEW - YOUFIXTHIS.COM

Download full manual at youfixthis.com

Time Delay Valve (Time Delay Valve Section Drawing)

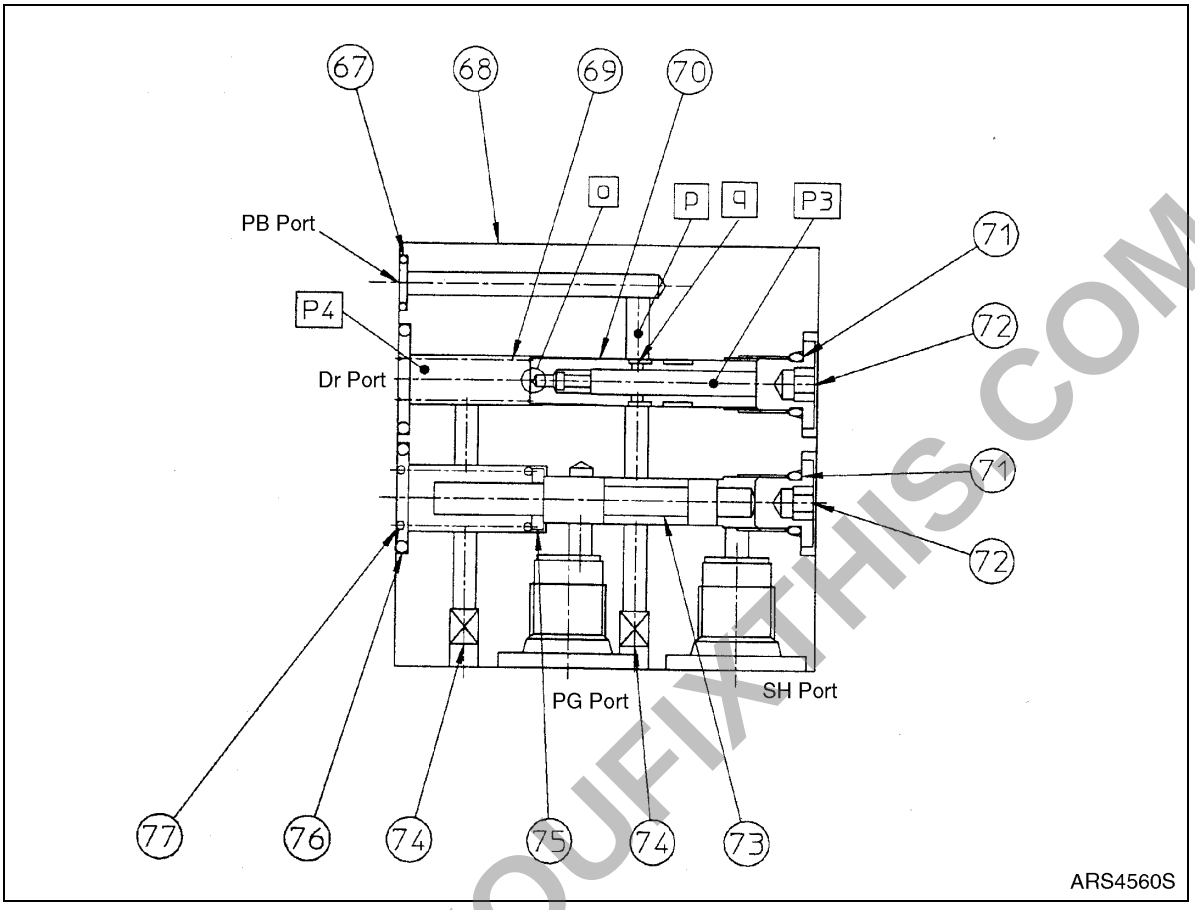

Figure 5

Pressure over mechanical brake releasing pressure always exists in port (PG).

1. Condition when drive shaft is locked by operation of mechanical brake

   In this condition, pressure in port (SH) does not exist, and spool (73) is pushed to the right side end by spring (77) and stops the flow of oil from port (PG) to port (PB).

2. Condition when mechanical brake is released

   In this condition, signal pressure into port (SH), moves spool (73) to the left side and oil flows through port (PG) and (PB) into the brake releasing chamber.

3. When delay function is operated

   When pressurized oil, flowing into port (SH) is stopped, as in condition 2, spool (73) is pushed to the right side end by spring (77), and closes port (PG) and (PB). Pressurized oil from port (PB) flows out to port (Dr). At this time, when the pressure difference between (P3-P4) of front chamber (P3) orifice (o) and spring chamber pressure (P4) is larger than the force (F) of spring (69) ((F)/poppet (70) area (A)), poppet (70) is moved to left side, then stopper part of slot part of it closes passage (p), and stops the oil flow from flowing into front chamber of orifice (o). Then spring chamber pressure (P4) equals (P3), then poppet (70) is moved to right side by spring (68) force, and oil flows from passage (p) to orifice (q) again. This oil quantity flowing to port (Dr) is controlled by the oil regulating valve and time is regulated till piston (13) is in the condition (1).

PREVIEW - YOUFIXTHIS.COM

Download full manual at youfixthis.com

Problem	Possible Cause	Remedy
Piston and shoe	Excessive load swing of motor	Check relief valve operation.
Shoe and swash plate	Temperature increasing	Check circuit.
Piston and cylinder	Roughness of sliding surfaces poor	Replace or repair abnormal parts.
Cylinder and valve plate	Hydraulic oil and lubricating poor	Replace hydraulic oil.
Pressure and spherical bushing		

TRAVEL REDUCTION GEAR

General Caution Matters

1. Check whether damages occur in transportation.
2. Check whether bolts are loose or rated oil quantities fill.
3. When working, close piping port.
4. Before fitting pipe, fill oil in case of motor part adequately.

Problem	Possible Cause	Remedy
Temperature of reduction gear housing is high. (Over 60° C of ambient temperature)		
Gear oil is insufficient.	Lubricating poor due to insufficient gear oil	Fill gear oil in rated quantity.
Bearing is damaged.	Heat due to bearing damaged	Replace bearing.
Gear is damaged	Heat due to pitting or damaging of gear tooth	Replace gear.
Leakage phenomena occur.		
Assembling surfaces leak	Bolt loose	Tighten rated torque.
	Liquid gasket is not applied.	Tighten rated torque after applying liquid gasket.
Leaks from plug	Plug loose	Tighten rated torque.
	Seal tape is not wound	Apply seal tape.
Leaks from floating seal	Sliding surface damaged or stuck	Replace
	O-ring damaged	Replace
surface of housing	Casting surface cracked	Replace
Abnormal noises occur.; Disassemble reduction gear and replace abnormal parts after inspecting parts.		

PREVIEW - YOUFIXTHIS.COM

Download full manual at youfixthis.com

17. Remove thrust bearing (15) and thrust washer (14) if the unit is a Series MG or MF. Inspect for wear, brinelling, corrosion and a full complement of retained rollers. See Figure 24.

    NOTE: *Large Frame Series MB and ME Torqmotors have a thrust bearing (15) sandwiched between two thrust washers (14) that cannot be removed from housing (18) unless bearing (13) is removed for replacement.*

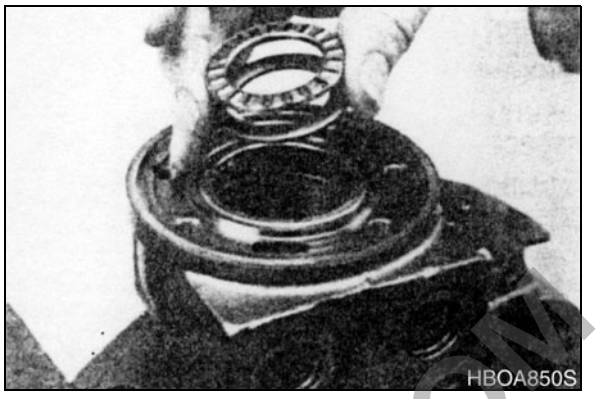

Figure 24

18. Remove seal (16) and backup washer (17) from Small Frame, MG and MF housing (18). Discard both. See Figure 25.

    Remove seal (16), backup washer (17), and backup washer (25) from Large Frame, Series MB and ME Torqmotor™ housing by working them around unseated thrust washers (14) and thrust bearing (15) and out of the housing. Discard seal and washers. See Figure 26.

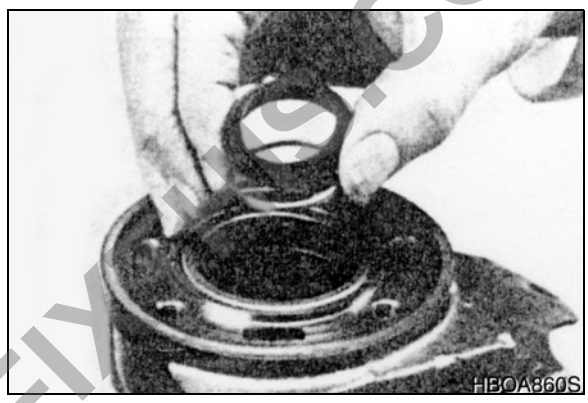

Figure 25

    NOTE: *The original design units of Large Frame, Series MB and ME Torqmotors™ did not include backup washer (25), but must include backup washer (Z5) when reassembled for service.*

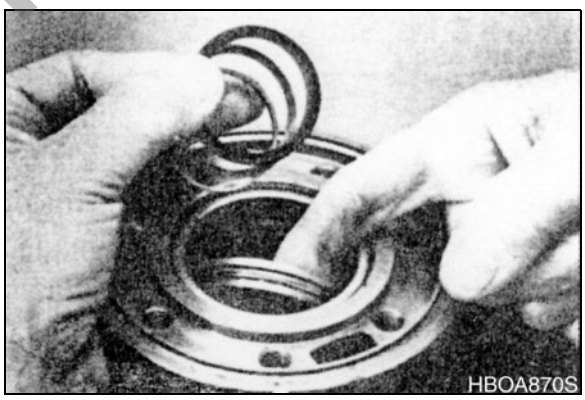

Figure 26

19. Remove housing (18) from vise, invert it and remove and discard seal (20). A blind hole bearing or seal puller required. See Figure 27.

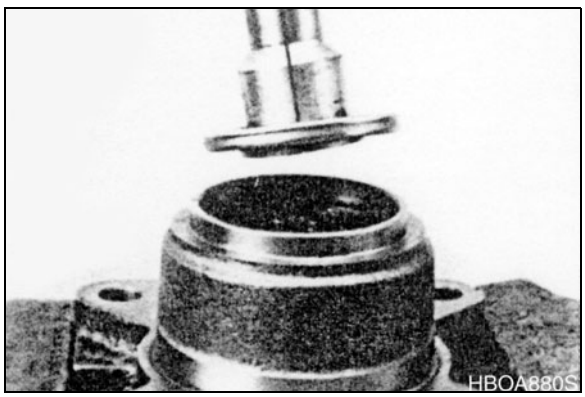

Figure 27

PREVIEW - YOUFIXTHIS.COM

Download full manual at youfixthis.com

REGULATOR FOR K5V, K3V SERIES OF KAWASAKI SWASH PLATE TYPE AXIAL PISTON PUMP

TYPE DESCRIPTION

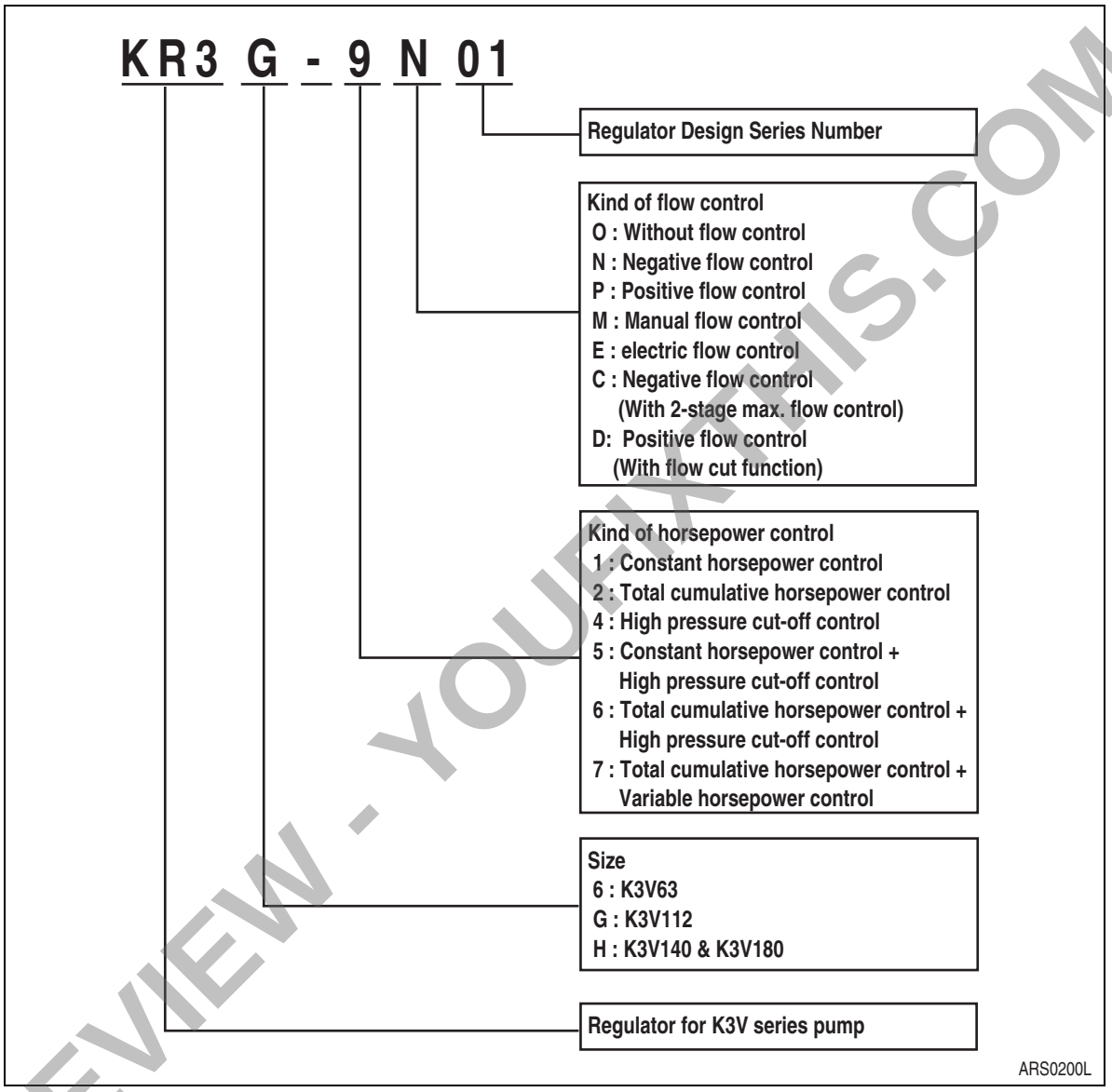

Figure 21

PREVIEW - YOUFIXTHIS.COM

Download full manual at youfixthis.com

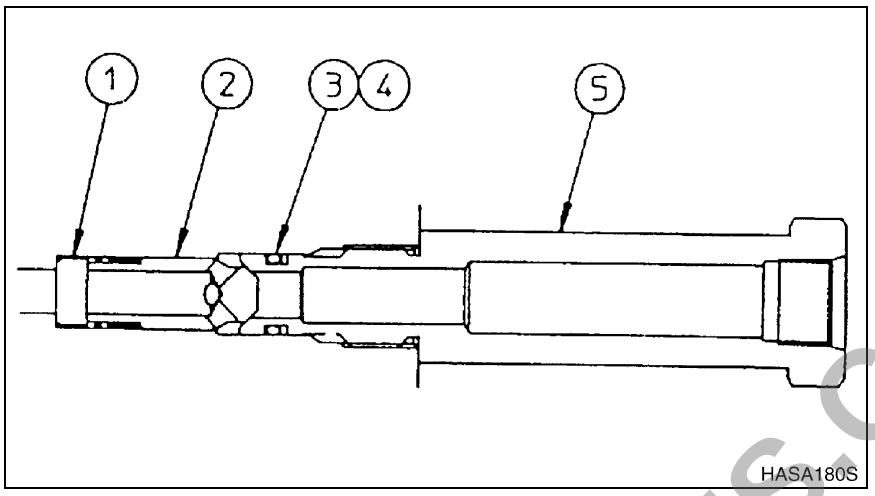

Figure 31

Reference Number	Description
1	Cut
2	Backup Spring
3	O-ring

Reference Number	Description
4	Tape
5	Spring

PREVIEW - YOUFIXTHIS.COM

Download full manual at youfixthis.com

GENERAL DESCRIPTION

THEORY OF OPERATION

The pilot control valve contains four push rods, a spring holder and return spring, which are in the valve casing. The valve works as a pressure reduction valve.

The housing has six ports, which include input port "P," tank port "T" and four secondary pressure ports.

The electric horn button is installed in the valve handle. Gear pump pressure is used for operating control spools.

Neutral Mode

When the lever is in neutral mode, the spool (12) is thrust upward by return spring (11), and the force of balance spring (18), which determines the secondary discharge pressure, is not transmitted to the spool. The input port is closed and the pressure of the output port is the same as the pressure of the tank port T.

Control Mode

When push rod (6) is pushed, the balance spring (18) begins to compress, and spring force is conveyed to the spool (12). Ports P and T are then connected together and the pilot pressure is conveyed to the area. Output pressure works on the bottom of the spool (12), thrusting the spool upward until it is balanced with the power of the balance spring (18). The secondary pressure (output pressure), therefore, changes in proportion to the compression force of the balance spring.

PREVIEW - YOUFIXTHIS.COM

Download full manual at youfixthis.com

ELECTRICAL SYSTEM

PREVIEW - YOUFIXTHIS.COM

Download full manual at youfixthis.com

Reference Number	Description
1	Instrument Panel
2	Engine Control Motor
3	Engine
4	Main Hydraulic Pump
5	Control Pump
6	Control Valve
7	Pressure Switch
8	Pump Pressure Sensor
9	Engine Speed Sensor
10	Electromagnetic Proportional Pressure Reducing Valve (E.P.P.R. Valve)

Reference Number	Description
11	Solenoid Valve (Pressure Up)
12	Solenoid Valve (Swing Priority)
13	Solenoid Valve (High Speed)
14	Travel Motor
15	Engine Throttle Control
16	Engine Control Dial
17	e-EPOS Controller
18	Auto Travel Selector Switch
19	Boost Switch (Right Work Lever)

PREVIEW - YOUFIXTHIS.COM

Download full manual at youfixthis.com

PREVIEW ONLY

You're viewing 25 of 696 pages

The full manual includes:

- All 696 pages, complete
- Searchable PDF (find any keyword)
- No watermarks
- Instant download
- Print-ready quality

GET FULL MANUAL NOW

Daewoo Solar 300LL, Solar 225LL Shop Manual

Scan or click anywhere
youfixthis.com

Click anywhere on this page to get the full manual