REMOVAL

⚠ CAUTION!

Avoid disassembling cab if there are strong wind gusts, which could catch large surface area of cab shell and push it sideways during lift.

1. Park on firm and level ground.
2. Lower bucket to ground.
3. Shut engine down and remove key from starter switch.

⚠ WARNING!

If engine must be run while performing maintenance, use extreme care. Always have one person in the cab at all times. Never leave the cab with the engine running.

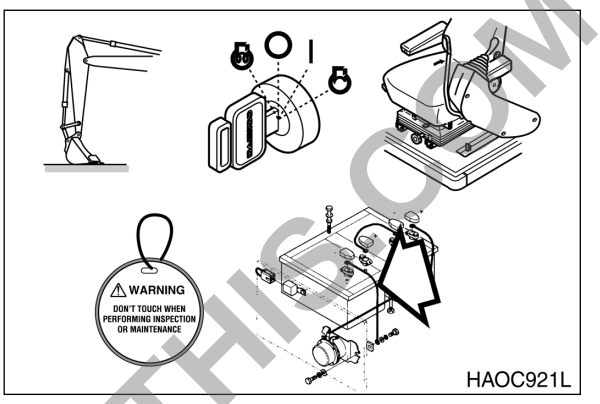

Figure 1

4. Set safety lever on "LOCK" position.
5. Hang maintenance warning tag on controls.
6. Disconnect negative (-) battery cable leading to frame from battery.
7. Prepare cab shell for removal by disconnecting wiring connectors for:
   A. Cab interior lighting.
   B. External light wiring.
   C. Radio antenna and connections.
   D. Wiper/washer connections.

   NOTE: *Control console wiring harnesses and hydraulic piping lines that pass through the floor of the cab do not need to be disassembled.*

   NOTE: *If unit is equipped with a cab protective structure (for forestry, or hazardous working conditions), it must be removed.*

PREVIEW - YOUFIXTHIS.COM

Download full manual at youfixthis.com

GENERAL DESCRIPTION

Schematic(s) presented in this section are laid out on facing pages.

An overlapping edge has been taken into consideration so that a photocopy can be made and pasted together to make a complete schematic.

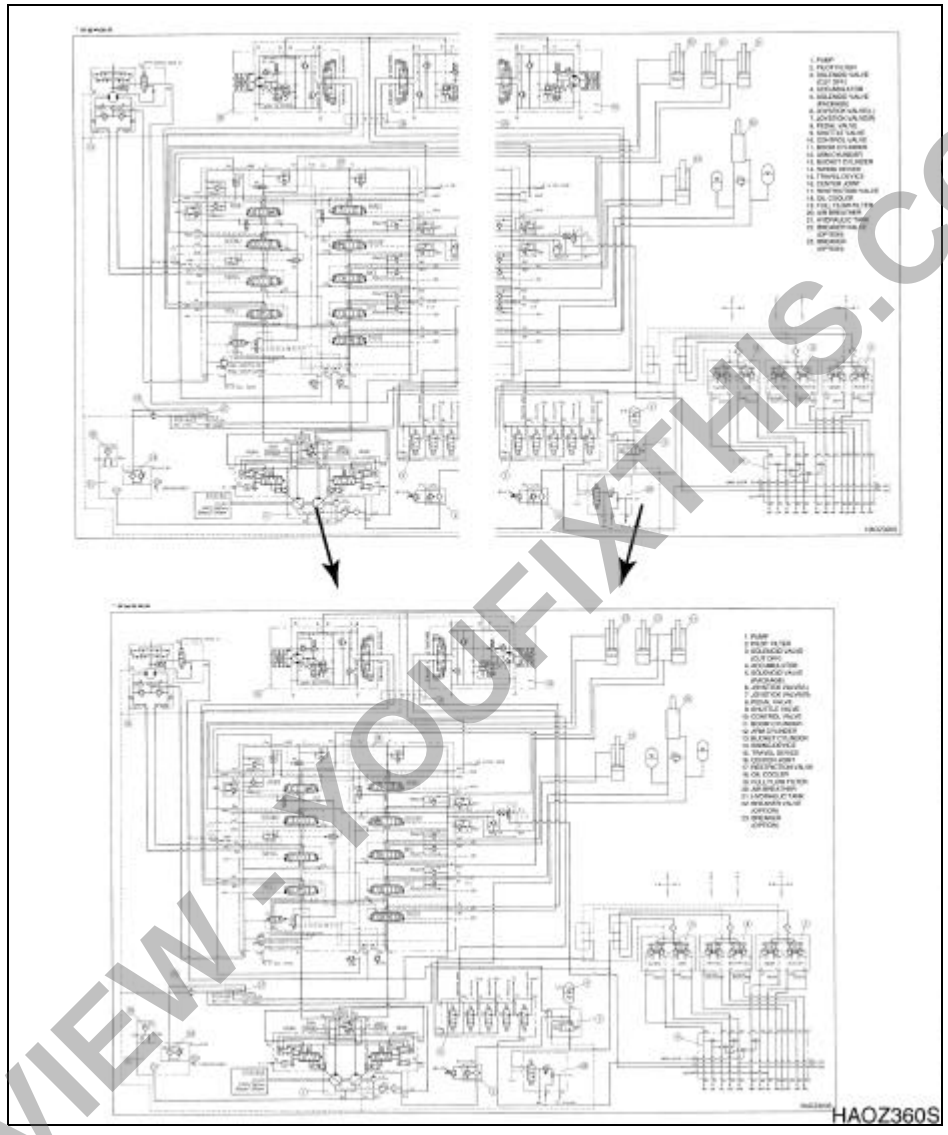

Figure 1

PREVIEW - YOUFIXTHIS.COM

Download full manual at youfixthis.com

GENERAL DESCRIPTION

Schematic(s) presented in this section are laid out on facing pages.

An overlapping edge has been taken into consideration so that a photocopy can be made and pasted together to make a complete schematic.

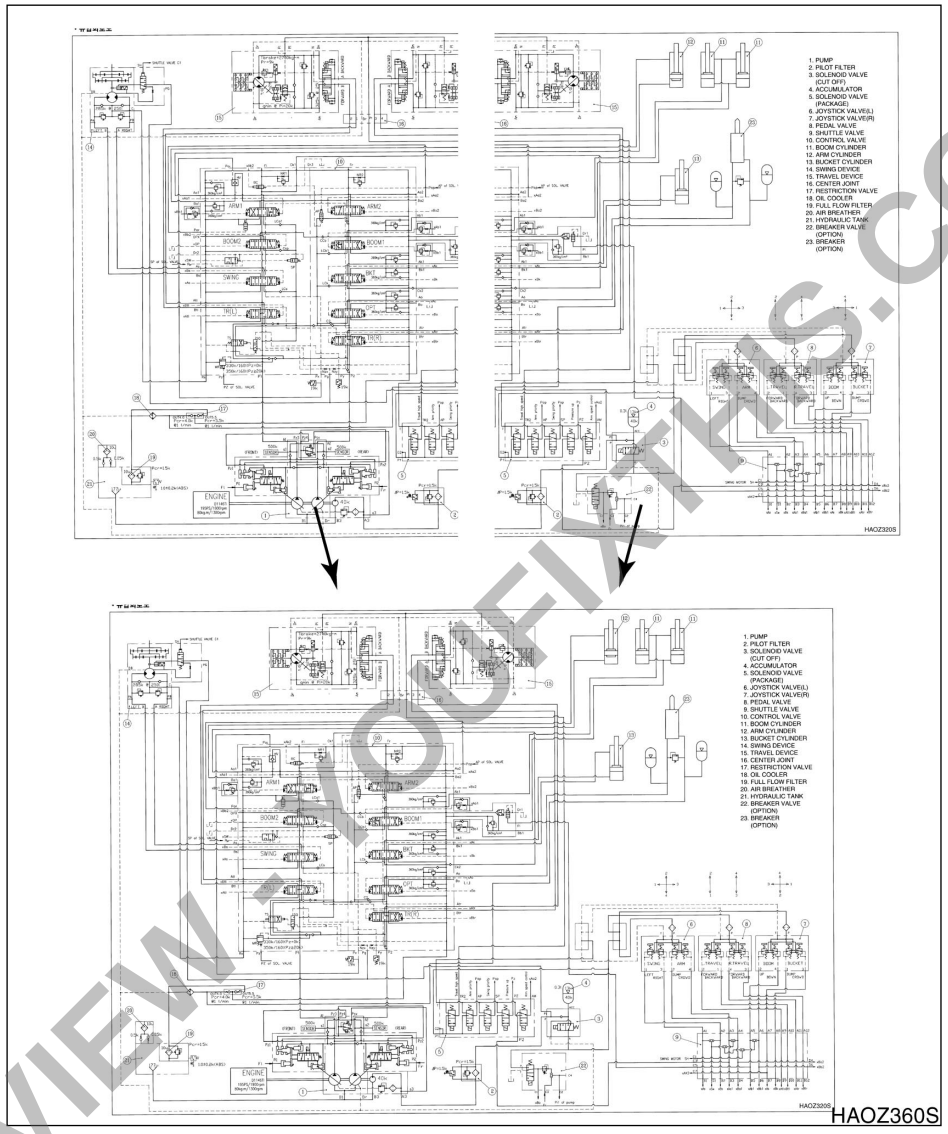

Figure 1

PREVIEW - YOUFIXTHIS.COM

Download full manual at youfixthis.com

1. BATTERY
2. FUEL TANK FILL CAP
3. FUEL TANK
4. HYDRAULIC OIL TANK
5. PUMPS
6. MUFFLER
7. COUNTERWEIGHT
8. ENGINE
9. RADIATOR AND OIL COOLER
10. AIR CLEANER
11. CONTROL VALVES
12. ARM CYLINDER
13. BOOM
14. BOOM CYLINDER
15. CAB
16. SEAT
17. CENTER JOINT
18. SWING MOTOR
19. PRECLEANER
20. TRAVEL MOTOR
21. LOWER ROLLER
22. UPPER ROLLER
23. TRACK GUIDE
24. TRACK ADJUSTER
25. IDLER
26. TRACK LINK AND SHOE
27. TRAVEL LEVER
28. WORK LEVER (JOYSTICK) CONTROLS
29. TOOTH POINT
30. SIDE CUTTER
31. BUCKET
32. PUSH LINK
33. GUIDE LINK
34. BUCKET CYLINDER
35. ARM

PREVIEW - YOUFIXTHIS.COM

Download full manual at youfixthis.com

TORQUE VALUES FOR STANDARD METRIC FASTENERS

NOTE: *The units for the torque values are kg•m (ft lb).*

Dia. x Pitch (mm)	Grade										
	3.6 (4A)	**4.6 (4D)**	**4.8 (4S)**	**5.6 (5D)**	**5.8 (5S)**	**6.6 (6D)**	**6.8 (6S)**	**6.9 (6G)**	**8.8 (8G)**	**10.9 (10K)**	**12.9 (12K)**
M5 x Std.	0.15 (1.08)	0.16 (1.15)	0.25 (1.80)	0.22 (1.59)	0.31 (2.24)	0.28 (2.02)	0.43 (3.11)	0.48 (3.47)	0.50 (3.61)	0.75 (5.42)	0.90 (6.50)
M6 x Std.	0.28 (2.02)	0.30 (2.16)	0.45 (3.25)	0.40 (2.89)	0.55 (3.97)	0.47 (3.39)	0.77 (5.56)	0.85 (6.14)	0.90 (6.50)	1.25 (9.04)	1.50 (10.84)
M7 x Std.	0.43 (3.11)	0.46 (3.32)	0.70 (5.06)	0.63 (4.55)	0.83 (6.00)	0.78 (5.64)	1.20 (8.67)	1.30 (9.40)	1.40 (10.12)	1.95 (14.10)	2.35 (16.99)
M8 x Std.	0.70 (5.06)	0.75 (5.42)	1.10 (7.95)	1.00 (7.23)	1.40 (10.12)	1.25 (9.04)	1.90 (13.74)	2.10 (15.18)	2.20 (15.91)	3.10 (22.42)	3.80 (27.48)
M8 x 1	0.73 (5.28)	0.80 (5.78)	1.20 (8.67)	1.00 (7.23)	1.50 (10.84)	1.35 (9.76)	2.10 (15.18)	2.30 (16.63)	2.40 (17.35)	3.35 (24.23)	4.10 (29.65)
M10 x Std.	1.35 (9.76)	1.40 (10.12)	2.20 (15.91)	1.90 (13.74)	2.70 (19.52)	2.35 (19.99)	3.70 (26.76)	4.20 (30.37)	4.40 (31.18)	6.20 (44.84)	7.20 (52.07)
M10 x 1	1.50 (10.84)	1.60 (11.57)	2.50 (18.08)	2.10 (15.18)	3.10 (22.42)	2.80 (20.25)	4.30 (31.10)	4.90 (35.44)	5.00 (36.16)	7.00 (50.63)	8.40 (60.75)
M12 x Std.	2.40 (17.35)	2.50 (18.08)	3.70 (26.76)	3.30 (23.86)	4.70 (33.99)	4.20 (30.37)	6.30 (45.56)	7.20 (52.07)	7.50 (54.24)	10.50 (75.94)	12.50 (90.41)
M12 x 1.5	2.55 (18.44)	2.70 (19.52)	4.00 (28.93)	3.50 (25.31)	5.00 (36.16)	4.50 (32.54)	6.80 (49.18)	7.70 (55.69)	8.00 (57.86)	11.20 (81.00)	13.40 (96.92)
M14 x Std.	3.70 (26.76)	3.90 (28.20)	6.00 (13.23)	5.20 (37.61)	7.50 (54.24)	7.00 (50.63)	10.00 (72.33)	11.50 (83.17)	12.00 (86.79)	17.00 (122.96)	20.00 (144.66)
M14 x 1.5	4.10 (29.65)	4.30 (31.10)	6.60 (47.73)	5.70 (41.22)	8.30 (60.03)	7.50 (54.24)	11.10 (80.28)	12.50 (90.41)	13.00 (94.02)	18.50 (11.26)	22.00 (158.12)
M16 x Std.	5.60 (40.50)	6.00 (43.39)	9.00 (65.09)	8.00 (57.86)	11.50 (83.17)	10.50 (75.94)	15.50 (112.11)	17.90 (129.47)	18.50 (133.81)	26.00 (188.05)	31.00 (224.22)
M16 x 1.5	6.20 (44.84)	6.50 (47.01)	9.70 (70.16)	8.60 (62.20)	12.50 (90.41)	11.30 (81.73)	17.00 (122.96)	19.50 (141.04)	20.00 (144.66)	28.00 (202.52)	35.50 (256.77)
M18 x Std.	7.80 (56.41)	8.30 (60.03)	12.50 (90.41)	11.00 (79.56)	16.00 (115.72)	14.50 (104.87)	21.00 (151.89)	27.50 (198.90)	28.50 (206.14)	41.00 (296.55)	43.00 (311.01)
M18 x 1.5	9.10 (65.82)	9.50 (68.71)	14.40 (104.15)	12.50 (90.41)	18.50 (133.81)	16.70 (120.79)	24.50 (177.20)	27.50 (198.90)	28.50 (206.14)	41.00 (296.55)	49.00 (354.41)
M20 x Std.	11.50 (83.17)	12.00 (86.79)	18.00 (130.19)	16.00 (115.72)	22.00 (159.12)	19.00 (137.42)	31.50 (227.83)	35.00 (253.15)	36.00 (260.38)	51.00 (368.88)	60.00 (433.98)
M20 x 1.5	12.80 (92.58)	13.50 (97.64)	20.50 (148.27)	18.00 (130.19)	25.00 (180.82)	22.50 (162.74)	35.00 (253.15)	39.50 (285.70)	41.00 (296.55)	58.00 (419.51)	68.00 (491.84)
M22 x Std.	15.50 (112.11)	16.00 (115.72)	24.50 (177.20)	21.00 (151.89)	30.00 (216.99)	26.00 (188.05)	42.00 (303.78)	46.00 (332.71)	49.00 (354.41)	67.00 (484.61)	75.00 (542.47)
M22 x 1.5	17.00 (122.96)	18.50 (133.81)	28.00 (202.52)	24.00 (173.59)	34.00 (245.92)	29.00 (209.75)	47.00 (339.95)	52.00 (44.76)	56.00 (405.04)	75.00 (542.47)	85.00 (614.80)
M24 x Std.	20.50 (148.27)	21.50 (155.50)	33.00 (238.68)	27.00 (195.29)	40.00 (289.32)	34.00 (245.92)	55.00 (397.81)	58.00 (419.51)	63.00 (455.67)	82.00 (593.10)	92.00 (655.43)
M24 x 1.5	23.00 (166.35)	35.00 (253.15)	37.00 (267.62)	31.00 (224.22)	45.00 (325.48)	38.00 (202.52)	61.00 (441.21)	67.00 (484.61)	74.00 (535.24)	93.00 (672.66)	103.00 (744.99)

PREVIEW - YOUFIXTHIS.COM

Download full manual at youfixthis.com

Symptoms	Possible Causes	Remedies
1. No rotation and –		
a. Pressure at swing motor inlet *increases*	Swing brake not releasing	Check brake engagement and disengagement, check release pressure
	Internal damage to gearbox drive train	Replace broken gears, drive train assemblies
	Overload	Reduce load weight
b. Pressure at swing motor inlet shows *no increase,* **and** the swing motor is making irregular noises	Swing motor drive shaft damage	Replace swing motor
	Internal damage to gearbox drive train	Repair/replace broken or faulty assemblies
c. Pressure at swing motor inlet shows *no increase,* but **without** irregular *noises* from the swing motor	Hydraulic pump or valve broken	Troubleshoot hydraulic system
2. Oil leakage		
a. From drive shaft	Oil seal damaged	Replace oil seal
b. From bolted connections or other assembled surfaces	Assembly compound (joint sealer) old and not sealing, bolt not tight or flange warped	Disassemble and check mating surfaces. Reapply Loctite, torque bolts to specifications
3. Excess heat		
Gearbox casing becomes excessively hot, with or without irregular noise(s) during operation	Low oil level	Replace oil, refill to specified level
	Bearings or gear worn but not completely inoperative	Repair or replace gearbox

HAOE960L

PREVIEW - YOUFIXTHIS.COM

Download full manual at youfixthis.com

GENERAL SPECIFICATIONS

Shipping Weight	41.2 metric tons (90,830 lb), includes 10% fuel, boom, 3,250 mm (10’ 8") arm, standard bucket and standard shoes
Operating Weight	Add weight of full fuel tank and operator.
Shipping Weights With Optional Track Shoes	41.2 metric ton (90,830 lb) for 600 mm (24") shoes
	41.9 metric ton (92,374 lb) for 750 mm (29.5") shoes
	42.1 metric ton (92,815 lb) for 800 mm (31.5") shoes
	42.6 metric ton (93,917 lb) for 900 mm (35.4") shoes
Major Component Weights	Standard Boom 6,700 mm (263.78 in) 3,206 kg (7,068.02 lbs)
	3,250 mm (127.95 in) Arm 1,833 kg (4,041.07 lbs)
	2,600 mm (102.36 in) Arm 1,696 kg (3,739.04 lbs)
	4,000 mm (157.48 in) Arm 2,040 kg (4,497.43 lbs)
	Boom Cylinders 370 kg (815.71 lbs) each
	Arm Cylinder 520 kg (1,146.40 lbs)
	Bucket Cylinder 335 kg (738.55 lbs)
	Counterweight 8,000 kg (17,637.90 lbs)
	Upper Turntable 17,630 kg (38,867.49 lbs) (Including counter weight, w/o front)
	Lower - 15,170 kg (33,444.12 lbs) (Including swing bearing)
Digging Forces (At Power boost):	
Bucket Cylinder	24,100 kg (53,131.40 lbs) with 3,250 mm (10’ 8") arm
Arm Cylinder	19,300 kg (42,549.21 lbs) with 3,250 mm (10’ 8") arm
	23,700 kg (52,249.55 lbs) with 2,600 mm (8’ 6") arm
	16,700 kg (36,817.20 lbs) with 4,000 mm (13’ 1") arm
Fuel Tank Capacity	550 liters (145.30 U.S. gal.)
Hydraulic Reservoir Capacity	265 liters (70.01 U.S. gal.)
Bucket Heaped Capacity Range	CECE 1.30 - 2.00 m^3 (1.70 - 2.62 yd^3)
	IMPORTANT: Refer to the Load Weight, Bucket and Arm Length Compatibility Table for information on which bucket sizes may be used safely with which arm length, for load material weights.
Shoe Type	Triple Grouser
Shoe Width and Optional Sizes	600 mm (23.62 in) - standard
	750 mm (29.53 in) - optional
	800 mm (31.50 in) - optional
	900 mm (35.43 in) - optional
Ground Pressure Ratings:	
Standard 600 mm (23.62 in) shoe	0.73 bar (10.59 psi)
Optional 750 mm (29.53 in) shoe	0.59 bar (8.56 psi)
Optional 800 mm (31.50 in) shoe	0.56 bar (8.12 psi)
Optional 900 mm (35.43 in) shoe	0.50 bar (7.25 psi)

PREVIEW - YOUFIXTHIS.COM

Download full manual at youfixthis.com

TABLE OF CONTENTS

To the Operator of a Daewoo Excavator 3
General Safety Essentials 5
Location of Safety Labels 5
Summary of Safety Precautions for Lifting in Digging Mode 6
Work-site Precautions 7
Operation 9
Equipment 14
Maintenance 18
Shipping and Transportation 21
Lifting With Sling 21

PREVIEW - YOUFIXTHIS.COM

Download full manual at youfixthis.com

SAFETY ALERT SYMBOL

Be Prepared - Get To Know All Operating and Safety Instructions.

This is the Safety Alert Symbol. Wherever it appears in this manual or on safety signs on the machine you should be alert to the potential for personal injury or accidents. Always observe safety precautions and follow recommended procedures.

LEARN THE SIGNAL WORDS USED WITH THE SAFETY ALERT SYMBOL

The words **"CAUTION," "WARNING"** and **"DANGER"** used throughout this manual and on decals on the machine indicate degree of risk of hazards or unsafe practices. All three degrees of risk indicate that safety is involved. Observe precautions indicated whenever you see the Safety Alert "Triangle," no matter which signal word appears next to the "Exclamation Point" symbol.

CAUTION!

Indicates potential of a hazardous situation that, if not avoided, could result in minor or moderate injury. It may also be used to alert against a generally unsafe practice.

WARNING!

Indicates potential of a hazardous situation that, if not avoided, could result in serious injury or death. It may also be used to alert against a highly unsafe practice.

DANGER!

Indicates imminent hazard of a situation that, if not avoided, is very likely to cause death or extremely serious injury. It may also be used to alert against equipment that may explode or detonate if handled or treated carelessly.

PREVIEW - YOUFIXTHIS.COM

Download full manual at youfixthis.com

MATERIAL	LOW WEIGHT OR DENSITY 1,100 KG/M^3 (1,850 LB/YD^3), OR LESS	MEDIUM WEIGHT OR DENSITY 1,600 KG/M^3 (2,700 LB/YD^3), OR LESS	HIGH WEIGHT OR DENSITY 2,000 KG/M^3 (3,370 LB/YD^3), OR LESS
Shale, broken	----------	1,362 kg/m^3 (2,295 lb/yd^3)	----------
Sulphur, broken	529 kg/m^3 (1,620 lb/yd^3)	----------	----------

PREVIEW - YOUFIXTHIS.COM

Download full manual at youfixthis.com

UPPER STRUCTURE

PREVIEW - YOUFIXTHIS.COM

Download full manual at youfixthis.com

SWING BEARING BASIC OPERATION

The swing bearing, which connects the upper structure with the lower structure, consists of a inner ring, outer ring and ball bearings. During swing movement, power from the swing motor is transferred to the pinion by planetary gears connected to gears on the inner ring, which is fixed in the undercarriage. Ball bearings turn the outer ring.

Reference Number	Description
1	Ball
2	Seal A
3	Seal B
4	Retainer
5	Retainer
6	Outer Ring
7	Inner Ring
8	Tapered Pin
9	Plug

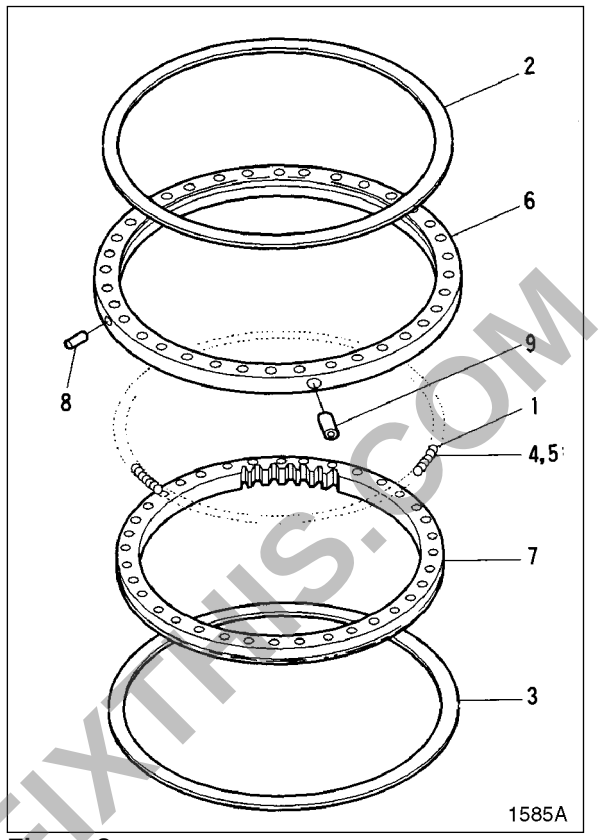

Figure 2

REBUILDING SWING BEARING

1. Remove tip of tapered pin (1, Figure 3) using grinder and tap lightly to remove debris.

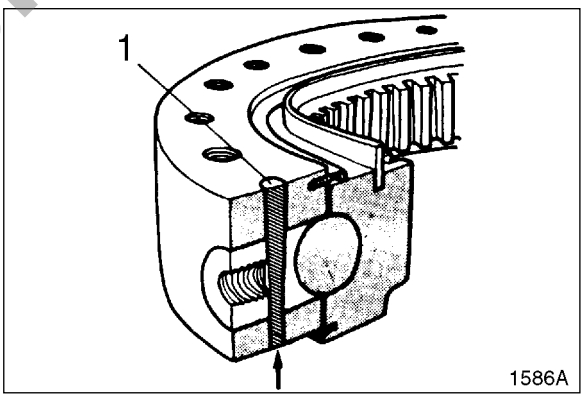

Figure 3

2. Remove plug (1, Figure 4) using a M10 x 1.25 bolt (2).

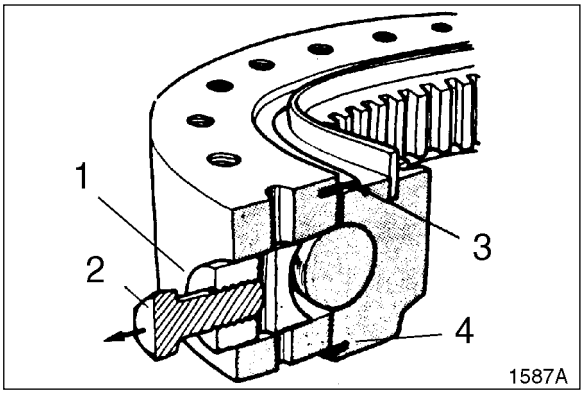

Figure 4

PREVIEW - YOUFIXTHIS.COM

Download full manual at youfixthis.com

TRACK REMOVAL

1. Position machine on a smooth level surface with adequate room for forward and reverse travel.
2. Relieve track tension. Refer to "Track Tension" in this section for procedure.
3. Move machine until master link (1) is positioned at approximately 10 o'clock from top position on travel reduction gearbox.
4. Remove four nuts and bolts (2) holding shoe to link. Remove enough shoes to make access to lock pin easier.

   NOTE: *Support track shoes with blocking so that when master pin (4) is removed tack will not fall.*

5. Straighten lock pin (3) and remove it from master pin (4). Discard lock pin.
6. Remove master pin from master links.
7. Move unit forward until entire track is laying on ground.

   NOTE: *Do not drive unit off track.*

8. Rotate upper structure to 90˚ from track. Use bucket and boom to raise track frame off track.
9. Position blocking under frame.

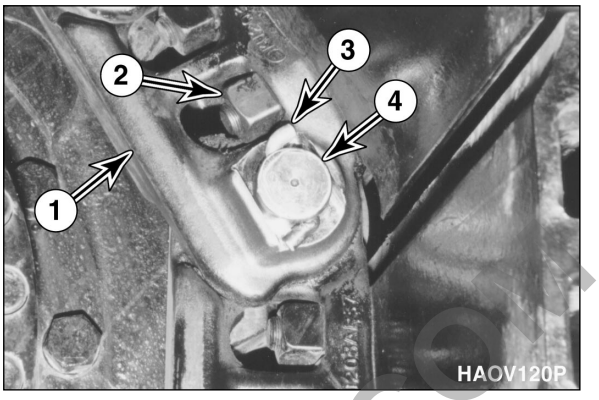

Figure 14

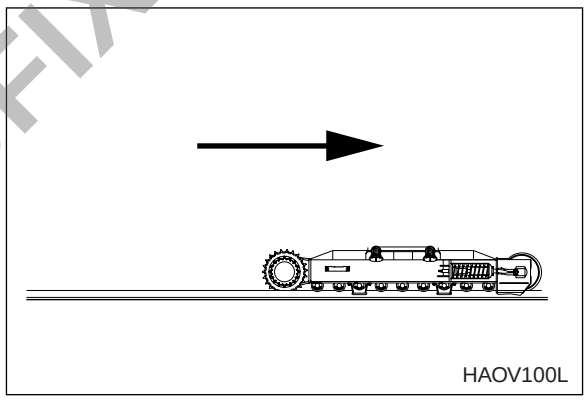

Figure 15

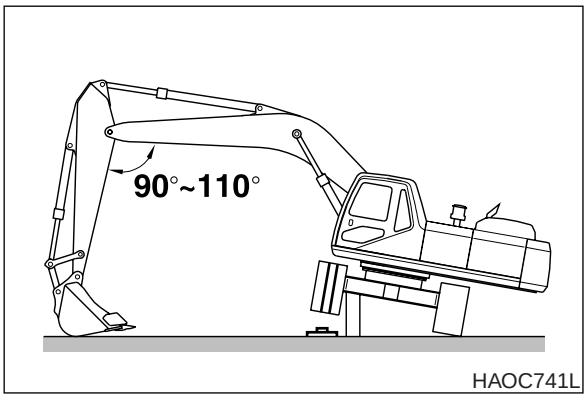

Figure 16

PREVIEW - YOUFIXTHIS.COM

Download full manual at youfixthis.com

3. Using a refrigerant leak detector or soapy water check each joint for leakage.

Reference Number	Description
1	Refrigerant Leak Detection Device

4. If a leak is detected, check for O-ring damage or correct tightening torque and replace or repair as necessary.

5. If no leaks are detected, proceed with the charging process.

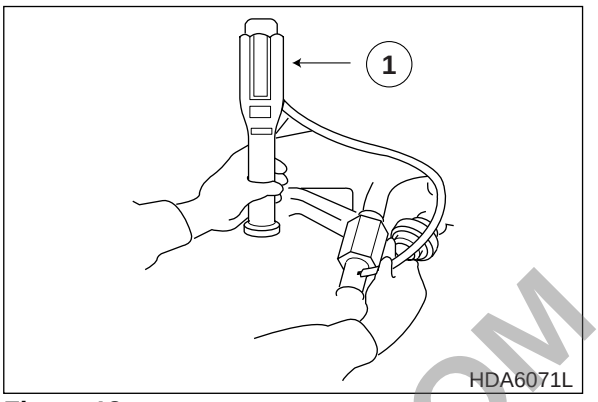

Figure 18

⚠ WARNING!

For accurate refrigerant leak detection, perform leak detection procedure in a well ventilated area.

REFRIGERANT CHARGING

1. Perform the vacuuming procedure, vacuum holding and leaking tests as described in the proceeding headings.

   NOTE: *First charge the refrigerant system with 100g (3.5 ounces) of refrigerant with the engine off. Then using the manifold gauges as a guide fully charge the system with the engine running.*

   When exchanging refrigerant containers, press the manifold gauge low side valve to eliminate air from the charging hose.

Reference Number	Description
1	To Compressor
2	Low Pressure Side
3	High Pressure Side
4	From Receiver
5	Refrigerant Supply Container

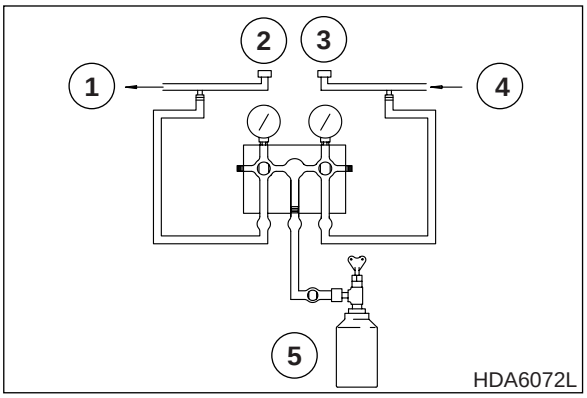

Figure 19

2. Charge the system by opening the manifold gauge low side valve.

   Initial charge amount: 100 g (3.5 ounces).

3. If refrigerant does not flow freely into system, try starting engine first before operating air-conditioner.

   - Temperature control switch setting: Maximum Cooling

     Blower Speed Setting: Hi (3 step)

PREVIEW - YOUFIXTHIS.COM

Download full manual at youfixthis.com

Pressure should stay consistently above 2.5 bar (36 psi). If pressure falls below the recommended minimum level, forceful acceleration of the swing motor could lead to cavitation of the circuit and stalling, slowed rotation, noise and possible damage.

2. If main inlet and outlet pressures were off in the preceding tests in Step 1, adjust swing relief valve pressure.

   Following adjustment, repeat the operating pressure tests (with gauges connected to the inlet and outlet test ports on top of the swing motor) and check pressures with the swing locks engaged and released.

   If pressure adjustment fails to restore adequate performance, proceed to the Troubleshooting - Swing table.

3. If pressure tests were at recommended levels through the main inlet and outlet ports, and through the "SH" port of the swing brake, the causes of poor swing performance could include a faulty swing motor, drive train overloading or gearbox defect, or a problem in the brake assembly or swing control valve. Proceed to the troubleshooting information in the next procedure.

   If pressure through the "SH" port was tested below the minimum 4 bar (58 psi) level, check the shuttle valve in the rear compartment behind cabin. When pressure through the port is at the recommended level, the brake release valve should disengage the swing brake, allowing the swing motor to rotate the excavator. If pressure adjustment to the valve has been restored but the brake still fails to release, the brake piston or friction plate may be frozen, requiring disassembly of the motor and parts repair/ replacement.

4. If pressure tested at the motor makeup valve falls below recommended minimum level, and consequent problems with cavitation, stalling and surging are observed, check the restriction valve. If pressure adjustment to the valve has been restored but if problems with cavitation continues, disassemble the upper swing motor housing and clean or replace assembly components as required.

   NOTE: *If all tested pressures are at or above recommended levels, and there are no mechanical problems in the drive train or in the motor/brake assembly, the problem will require further hydraulic troubleshooting. It's also possible that a defective joystick, an intermittent short in an electrical control circuit or a problem in the e-EPOS circuit is causing diminished swing performance. Pull out the e-EPOS indicator panel from underneath the operator's seat and perform the self-diagnosis test. If the display panel reads code "0.2," it is reporting that the swing priority proportional valve is not functioning, except in the minimum "fail-safe" mode. Refer to the Electrical section of this book for more information.*

PREVIEW - YOUFIXTHIS.COM

Download full manual at youfixthis.com

3. Pre-lubricate O-rings and seals before reassembly (Figure 27).

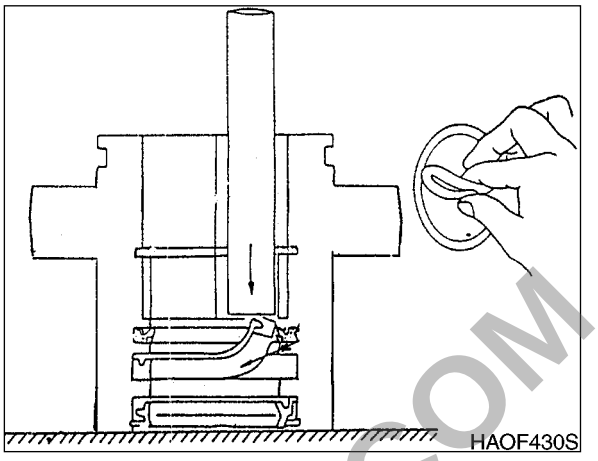

Figure 27

4. Before starting to rebuild piston assembly, heat slipper seal for 5 minutes in an oil bath warmed to 150° - 180°C (302° - 356°F). Use special slipper seal jig (third item in list of specialized tools at the beginning of this procedure) to attach seal. Cool seal by pushing a retracting jig against seal for several minutes. Apply a strip of clean, see-through sealing tape around slipper seal to keep it free of dust.

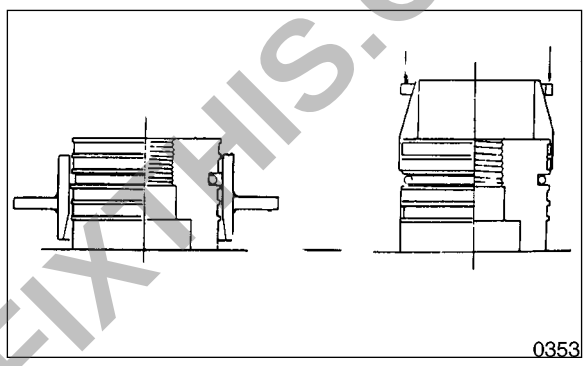

Figure 28

5. Immobilize piston rod on solid support blocks. Assemble O-ring (20) and backup ring (21). Prepare to attach rod cover assembly to piston rod. Push rod cover by tightening piston nut (22).

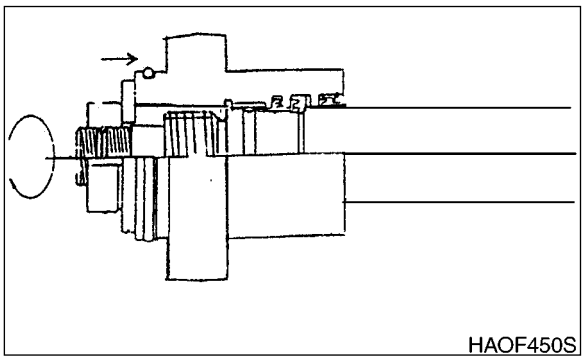

Figure 29

PREVIEW - YOUFIXTHIS.COM

Download full manual at youfixthis.com

DISASSEMBLY AND ASSEMBLY

PREPARATION

Tools and Jigs

Description	Specification etc.
Hex. Key	Width Across Flat 5,6, 10, 14
Spanner	Width Across Flat 19,27,32,35
Snap Ring Prier	For Shaft ∅45
Snap Ring Prier	For Bore ∅32 ~ ∅80
Plastic Hammer	
Screw Driver	Minus(-), Medium Size, 2 Pieces
Torque Wrench	0 ~ 38.5 kg·m
Gear (Bearing) Puller	Work Size : Dia.75 x Width 45 can be handled.
Mount Metal	EX L160, W70, H37, with 20 x 100 long hole, 2 Pieces
Jig for Inserting Oil Seal	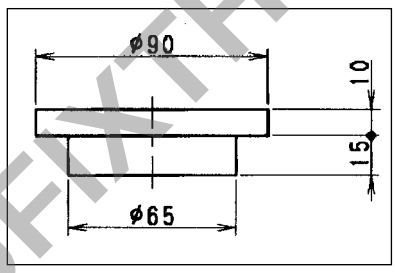
Jig for Inserting Piston	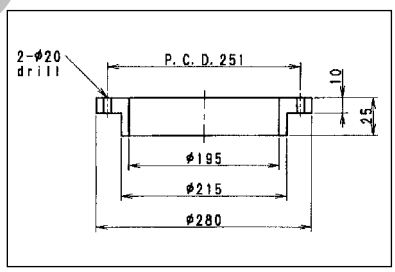
Others Seal Tape Kerosene Grease Hydraulic Oil Compressed Air Waists etc.	

PREVIEW - YOUFIXTHIS.COM

Download full manual at youfixthis.com

DISASSEMBLING AND REASSEMBLING

PREPARATION FOR DISASSEMBLING

All the hydraulic components are machined precisely, so disassembling and reassembling should be performed especially on clean place.
In handling this valve, take the greatest care so that the sands, small particles etc. may not invade the valve. When this valve is detached from hydraulic motor, caps should be put on each port. After confirming that each port is completely capped, wash the exterior of assembly.
Perform disassembling and reassembling on the adequate bench after covering the clean paper, rubber mat etc. on it, and handle each part carefully.
Below table shows the tools required for disassembling and re-assembling this valve. Prepare also the kerosene, hydraulic oil, grease etc. in advance.

TOOLS

Descriptions	Width across flats	Remarks
Hex. Key	10	for item 12 & 14
Spanner	19	for item 10

DISASSEMBLING PROCEDURE

1. Remove the valve from hydraulic motor, and place it on a bench. Detach o-ring item I6 and 17 on gasket surface.
2. Loosen the countersunk head capscrew item 12 and remove cover item 7.
3. Pull out o-rings items 5 & 6, spring item 4 and spring seat item 3.
4. Pull out the stool item 2 from the body item 1. It is impossible to disassemble this spool further.
5. Pull out the plug item 10 of cover item 7, spring item 9 and restrictor item 8.

REASSEMBLING

Inspection before reassembling.

After disassembling, wash all the parts with clean kerosene, and check as the following, and coat them with hydraulic oil.

1. Spool
   No burrs, no dust, no Indents, no rust should be found on the oil groove etc.
2. Sliding parts
   All the parts should be well slidable. No foreign particles nor rust should exist in the grooves, holes, and passages.
3. Check valve
   No indents and no damages should exist.
4. Seal surface
   Seal surface should have no burrs, no dusts, no rusts, etc. .
5. Restrictor
   No indents and no damages should be found on seat surface.
   The hole should not be clogged.

PREVIEW - YOUFIXTHIS.COM

Download full manual at youfixthis.com

6. Piston

Check to ensure that they are free of scores and that there are no pittings.

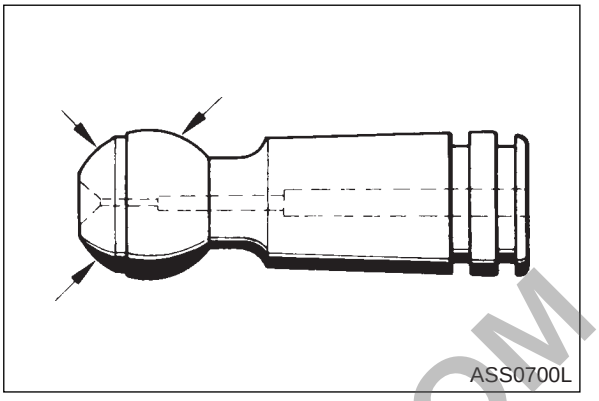

Figure 71

7. Central pin

Check to ensure that it is free of scores and that there are no pittings.

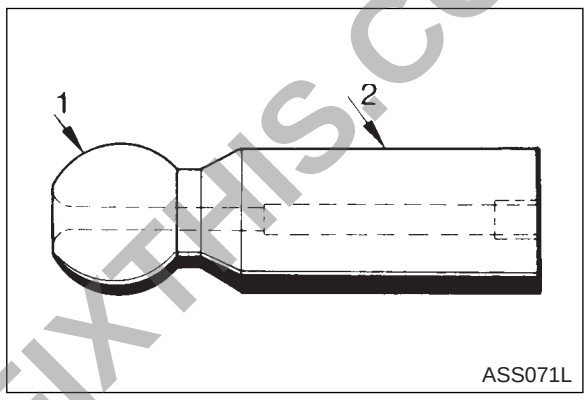

Figure 72

8. Retaining plate

Check to ensure that it is free of scores and that there is no evidence of wear.

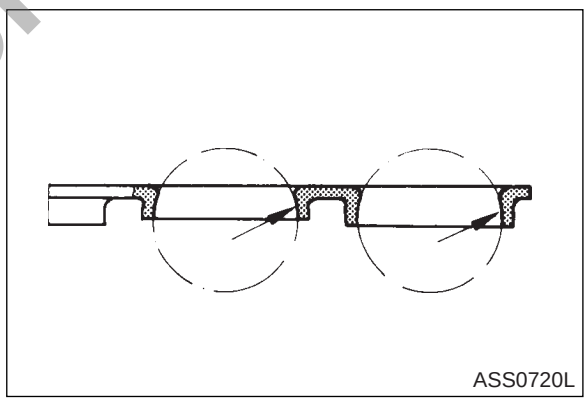

Figure 73

9. Cylinder block / control lens

Check to ensure that:

The bores (1, Figure 74) are free of scores, no evidence of wear.
The faces (2, Figure 74) are even, that there are no cracks, no scores.
The side guides (3, Figure 74) show no evidence of wear, free of scores.

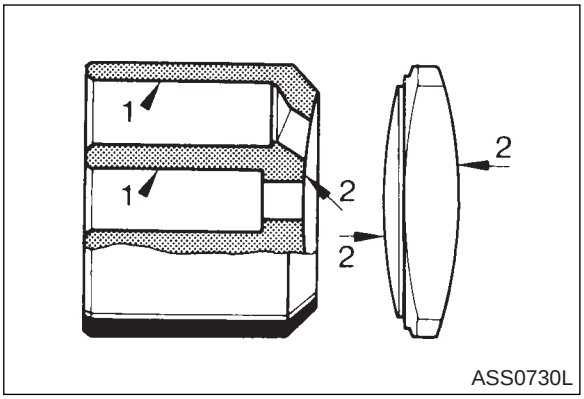

Figure 74

PREVIEW - YOUFIXTHIS.COM

Download full manual at youfixthis.com

2. Swing Combined Operation

When applying the combined operation with the swing and the other implement, the poppet (S2-1) is fixed increasing the port (pc6) pressure, the poppet (S2-3) is opened, and the pressure supplied to the port (L-3) increased through the throttle (S2-4). Accordingly, even in the case that the swing load pressure is low, the simultaneous operation character with the other implement can be secured.

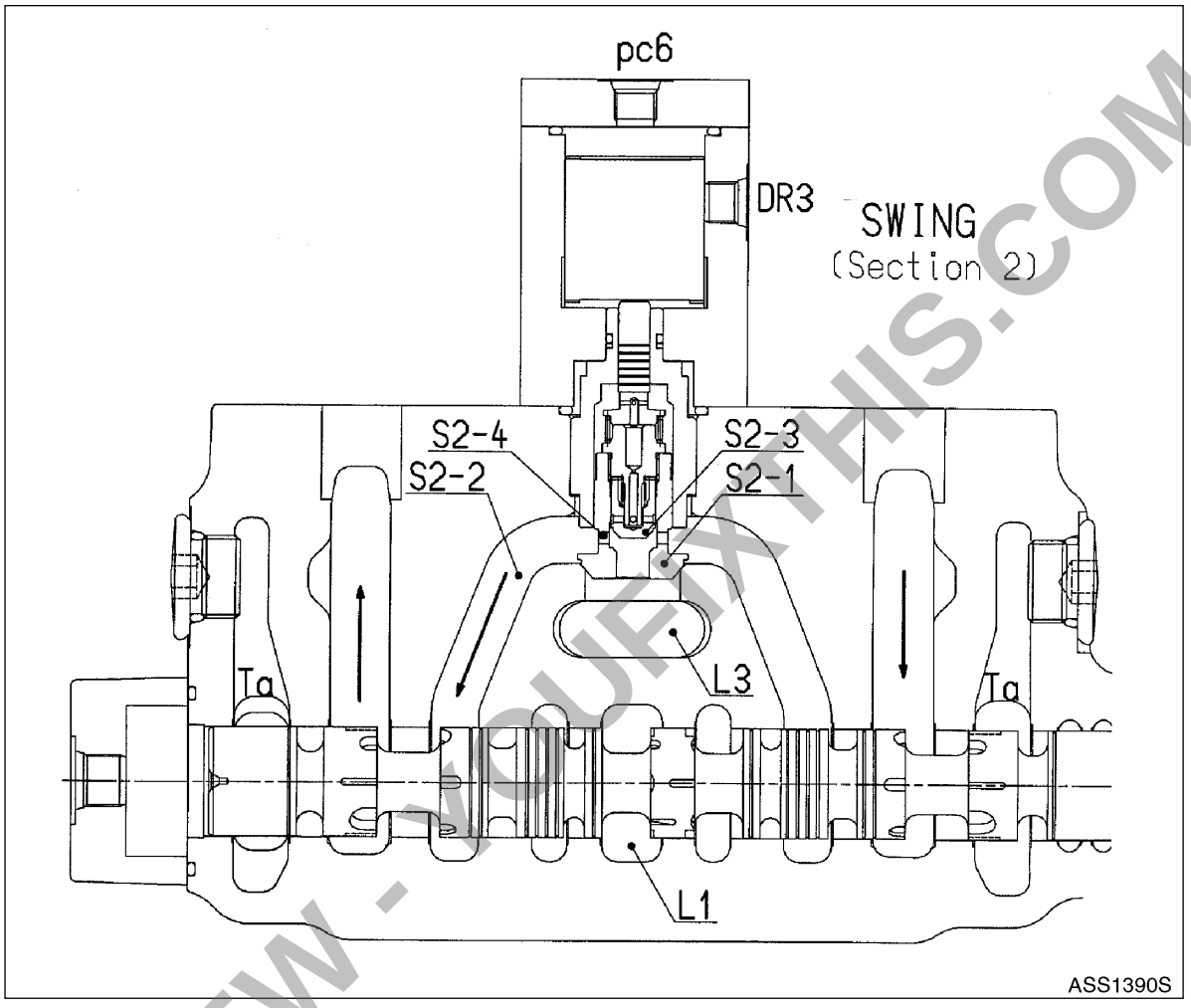

Figure 14

PREVIEW - YOUFIXTHIS.COM

Download full manual at youfixthis.com

GENERAL DESCRIPTION

THEORY OF OPERATION

Structure

The remote control valve contains four push rods, spring holders, spools and return springs, which are located in the valve casing. The valve works as a pressure reduction valve.

The housing has six ports, which include input port P, tank port T, and four secondary pressure ports.

The electric horn switch is installed in the valve handle. Gear pump pressure is used for operating control spools.

Function

1. Neutral Mode

   When the lever is in neutral mode, the spool is thrust upward by return spring, and the force of balancing spring, which determines the secondary discharge pressure, is not transmitted to the spool. The input port is closed and the pressure of the output port is the same as the pressure of the tank port T.

2. Control Mode

   When push rod is pushed, the balance spring begins to compress, and spring force is conveyed to the spool. Ports P and T are then connected together and the pilot pressure is conveyed to the area. Output pressure works on the bottom of the spool, thrusting the spool upward until it is balanced with the power of the balance spring. The secondary pressure (output pressure), therefore, changes in proportion to the compression force of the balance spring.

PREVIEW - YOUFIXTHIS.COM

Download full manual at youfixthis.com

3. Clean plug (21) with thinner, inspect burrs and install rod seal (23) and dust seal (24) on both sides of plug by using tool.

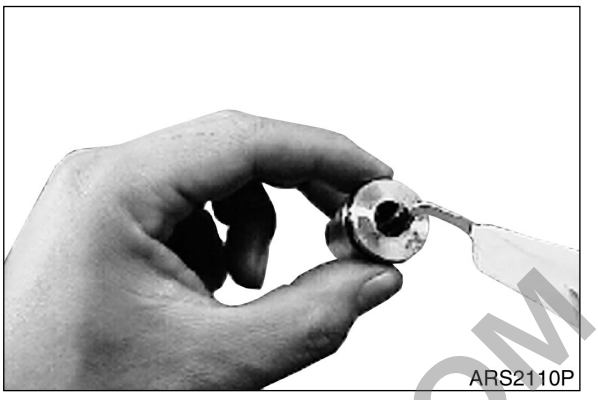

Figure 34

4. Install O-ring (22) on outside diameter of plug (21) and check plug whether it is abnormal.



Figure 35

5. Install spring seat (7), spring (6) and spring seat (5) on spool (8).

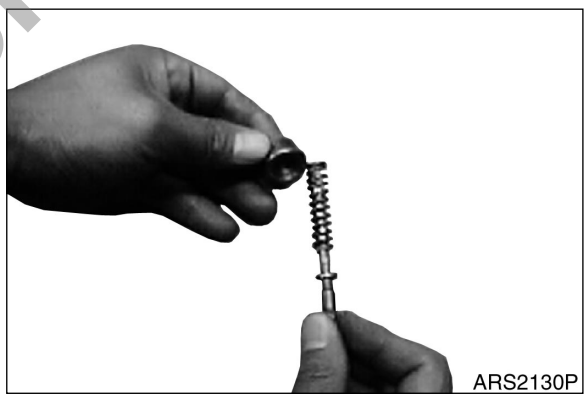

Figure 36

6. Install O-ring (12) on rod guide (11).



Figure 37

PREVIEW - YOUFIXTHIS.COM

Download full manual at youfixthis.com

GRAPHIC INFORMATION AREA DISPLAY

OVERVIEW

Many kinds of condition of machine are displayed on the letter information display department. The information display department is divided into two menus. One is main menu for user and the other is special menu for specialist. These menus can be moved from normal display mode by the combination of select buttons.

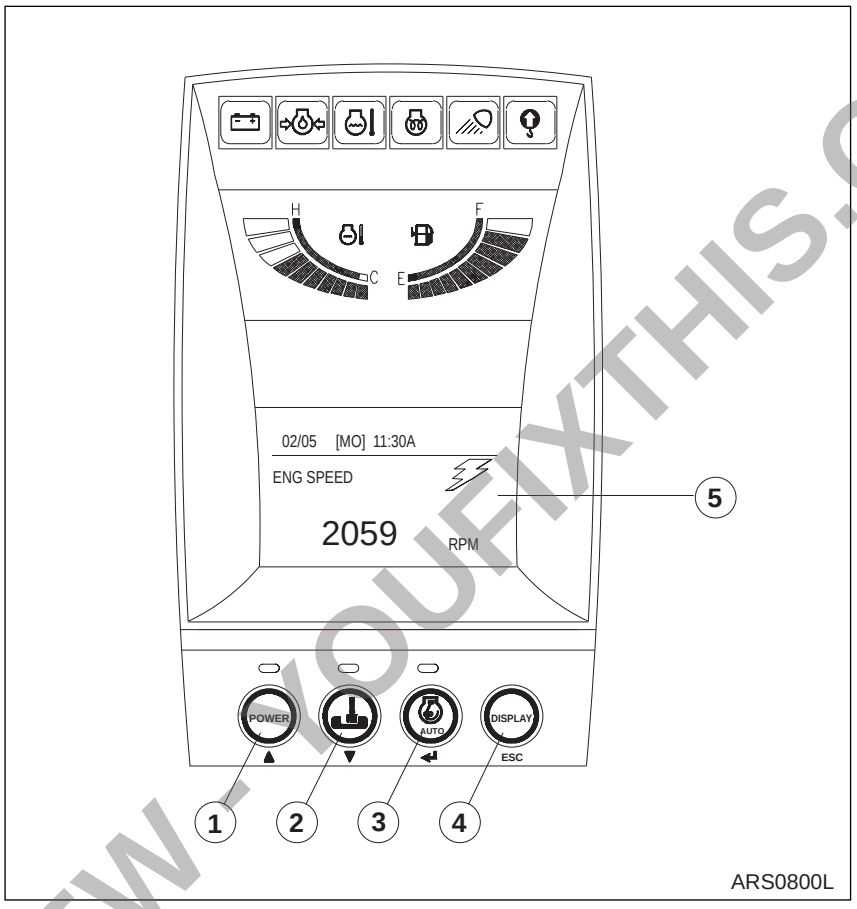

Figure 12

Selection Buttons	Graphic Display Area
1. Up Arrow Button 2. Down Arrow Button 3. Enter Button 4. Escape Button	5. Letter Information Display Department

PREVIEW - YOUFIXTHIS.COM

Download full manual at youfixthis.com

POWER BOOST MODE

OPERATION

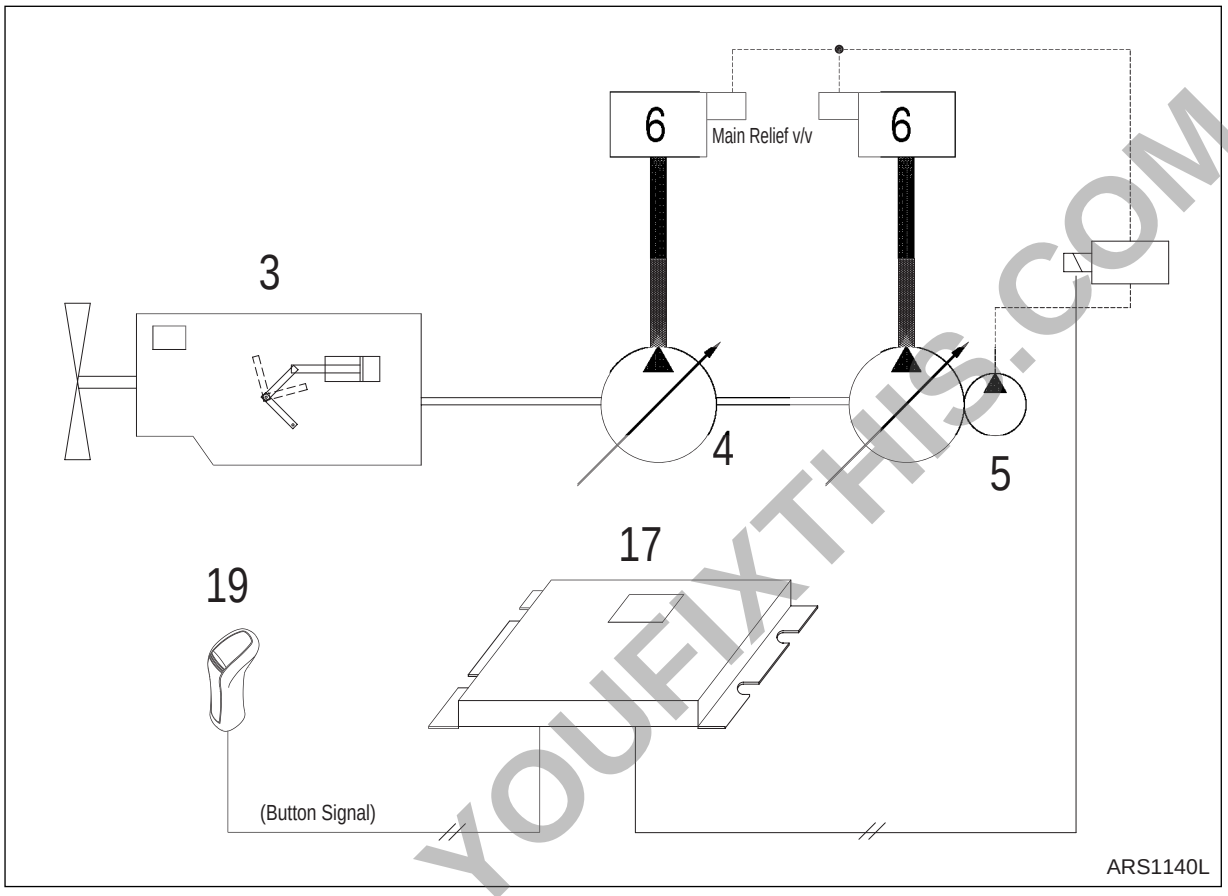

Figure 58

Reference Number	Description
3	Engine
4	Main Pump
5	Control Pump
6	Control Valve

Reference Number	Description
11	Solenoid Valve
17	e-EPOS Controller
19	Power Boost Switch (Top of Right Work Lever)

The Power Boost function is used to temporarily increase the main relief pressure to enhance excavation ability. When the switch button on top of the right work lever is pressed during work, the e-EPOS controller will activate the power boost solenoid valve and increase the relief valve pressure from 330 - 350 kg/cm^2 (4,700 - 5,000 psi). The excavation ability is increased by approximately 6%.

NOTE: *Do not use this switch for more than 10 seconds.*

PREVIEW - YOUFIXTHIS.COM

Download full manual at youfixthis.com

PREVIEW ONLY

You're viewing 24 of 582 pages

The full manual includes:

- All 582 pages, complete
- Searchable PDF (find any keyword)
- No watermarks
- Instant download
- Print-ready quality

GET FULL MANUAL NOW

Daewoo Solar 130LC-V, Solar 170LC-V, Solar 220LC-V, Solar 220N-V, Solar 250LC-V, Solar 290LC-V, Solar 300LC-V, Solar 300LL, Solar 330LC-V, Solar 340LC-V, Solar 400LC-V, Solar 420LC-V, Solar 450LC-V, Solar 470LC-V Shop Manual

Scan or click anywhere
youfixthis.com

Click anywhere on this page to get the full manual