FIG. 3. CONTROLS

A. Fuel Cut-off
B. Starter Button
C. Isolating Switch
D. Independent Brakes
E. Locking Bar
F. Gear Lever
G. Range Lever
H. Gearbox Filler Plug
J. Transmission Dip Stick
K. Steering Box Plug
L. Clutch Pedal

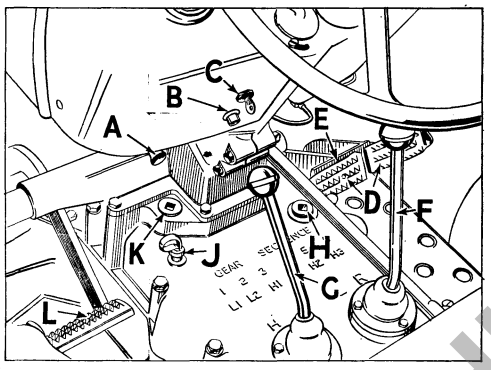

Gears—The positions of the gears and sequence are shown cast on the gearbox lid. The main gear lever, which is the R.H. one, has 3 forward and one reverse position. The auxiliary gear lever gives a high range when pushed forward and a low range when placed rearward. There is a neutral position mid-way between which should be made use of when using the belt pulley unit or power take off on stationary work.

The sequence of gear ratios is as follows:—

1st or bottom	L.1	5th	H.2
2nd	L.2	6th or top	H.3
3rd	H.1	1st reverse	L.R.
4th	L.3	2nd reverse	H.R.

Experience is the best guide to the choice of gears for any particular requirement, but if the engine is labouring, denoted by loss of speed when the load is applied, select a lower gear.

The gearbox is of the sliding gear type, and gear changing whilst the tractor is in motion must be undertaken only by an experienced driver.

Clutch—On the V series tractor a "livedrive" clutch is incorporated. The pedal has four stages of movement as shown in Fig. 4 ; the end of each stage being denoted by an increase in pedal pressure.

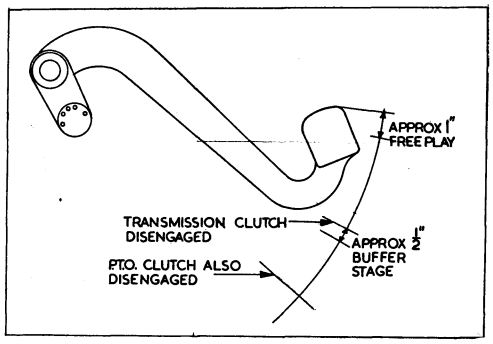

FIG. 4
LIVEDRIVE CLUTCH

PREVIEW - YOUFIXTHIS.COM

Download full manual at youfixthis.com

STARTING THE DIESEL ENGINE

1. Ensure there is ample fuel in the tank.
2. Put the gear lever in neutral.
3. Turn the fuel tap on (*i.e.* fully unscrewed).
4. Put the fuel cut-off in the running position (*i.e.* pushed in).
5. Open the throttle wide (*i.e.* pulled fully towards the driver).
6. Switch on the starter isolating switch.
7. Press the starter button and release immediately the engine fires. If the engine does not start within 15 seconds release the starter and wait 20 seconds before trying again otherwise the batteries will be overheated with consequential damage to the plates. As soon as the engine runs adjust the throttle to give 1 000 rev/min for warming up.
8. Check that the oil pressure warning light goes out.

In cold weather—The wing nut underneath the auto-retard device under the D.P.A. pump should be screwed in before trying to start the engine. As soon as the engine is running the screw must be slackened. Until it is unscrewed the engine will run erratically with black exhaust, but starting will be improved under extreme conditions. In normal weather or when the engine is warm the device need not be used. Pressing the clutch pedal will release the drag of the gearbox. Ensure that the correct grade of lubricating oil is being used.

In sub zero conditions—Assistance may be obtained by removing the large slotted screw on the pre-cleaner. Dip the felt in ether and replace.

Stopping the Engine

Reduce engine speed and pull out the fuel cut-off control keeping it out until the engine has stopped turning. Drop into the notch to prevent accidental starting of the engine. **Turn off the isolating switch.**

IMPORTANT—Do not stop the engine by turning off the fuel. Running the engine with the fuel off, or without fuel in the tank, will produce air locks in the system thus preventing restarting. Do not let the engine idle for long, as this will carbon up the injectors.

PRECAUTIONS IN FROSTY WEATHER

If the tractor is to stand for any length of time the radiator and cylinder block must be drained unless anti-freeze is used. The system is pressurized and, before draining, the radiator cap should be removed, if possible after allowing the engine to cool. In any case, care should be taken to release the cap carefully and slowly.

When standing for a short time, throwing a sack or blankets over the bonnet and radiator grille will prevent rapid cooling. Where fitted the radiator blind should be closed. Protecting the engine and radiator

PREVIEW - YOUFIXTHIS.COM

Download full manual at youfixthis.com

EVERY 60 HOURS

Carry out all the previous instructions, plus the following:—

1. Empty, clean and refill the air cleaner oil bath to the correct level with new engine oil.
2. Check the gearbox oil level and top up if necessary.
3. Clean the nipples and apply lubricant as follows :—

S.A.E. 140 OIL to the following points :—

King pins.
Front axle trunnions (2 points).

GREASE to the following points :—

Front hubs.
Track rod ends (2 points).
Both ends of the side steering rod.
Steering box cross shaft (3 points).
Steering Column Top Bearing.
Rear Hubs.
Brake pedal (1 point).
Response unit Cable.
Hydraulic lift ram shaft (3 points).
Top link.
Lift rods (5 points).

4. Check the tyre pressures and re-inflate to the correct pressures if necessary (see page 15). Pressures should be checked more frequently if water filled.
5. Inspect the governor mechanism for stiffness or damage. Apply a spot of oil to the engine control lever pivots and joints. Wipe off excess lubricant and generally clean the engine and tractor.
6. Check the level of the electrolite in the batteries. When necessary, top up each cell to the correct level with distilled water. Do not allow the level to drop below the top of the plates, but do not over-fill. Keep the top of the battery clean and the vent holes in the caps clear.

PREVIEW - YOUFIXTHIS.COM

Download full manual at youfixthis.com

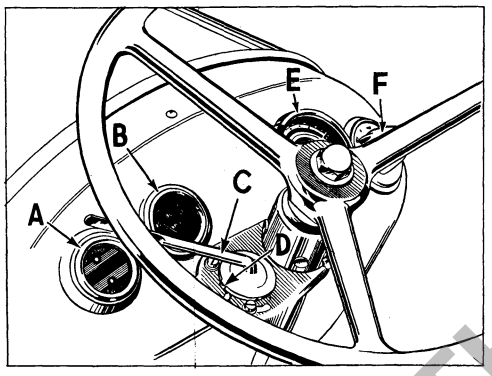

FIG. 2. DASH PANEL
A. Warning Lights (Oil and Charge)
B. Water Temperature (U318)
C. Throttle Lever
D. 1 800 rev./min. Indication
E. Tractormeter (U285)
F. Lighting Switch

coincides with full load engine speed of 1 800 rev/min. For all normal purposes this can be regarded as the maximum speed position and is also the position to give a p.t.o. speed of 540 rev/min.

Lighting Switch—This switch has five positions as follows. OFF—All lights off. S—Side and tail lights only. S/D—Side and tail plus dipped head lights. S/M—Side and tail plus head lights on main beam. M—Head lights only on main beam. This latter position is for ploughing purposes and eliminates the glare from the side lights. The rear ploughing lamp contains its own switch but can be illuminated only when the head lights are on main beam.

Fuel Cut-off—Pull fully out until the engine comes to rest, drop into the notch to prevent accidental starting of the engine. Ensure that the control is pushed properly in before re-starting.

Isolating Switch—This is operated by the key and merely isolates the starter solenoid from the battery and does not stop the engine when switched off. The key cannot be withdrawn when the switch is on.

Brakes—Independently acting brake pedals are mounted side by side on the R.H. side and may be used individually as steering brakes for making short turns at headlands, etc. Each pedal operates on the corresponding rear wheel brake. The pedals **must** be locked together with the locking bar fixed to the left hand pedal for use as road brakes. Individual use of the brakes at speed may cause a dangerous and unexpected swerve besides giving half the available braking force.

To apply the hand brake, turn the lever forwards then pull upwards, pressure on the foot pedals will give assistance for extra tightness when required. The brake is released by turning the lever outwards and lowering.

PREVIEW - YOUFIXTHIS.COM

Download full manual at youfixthis.com

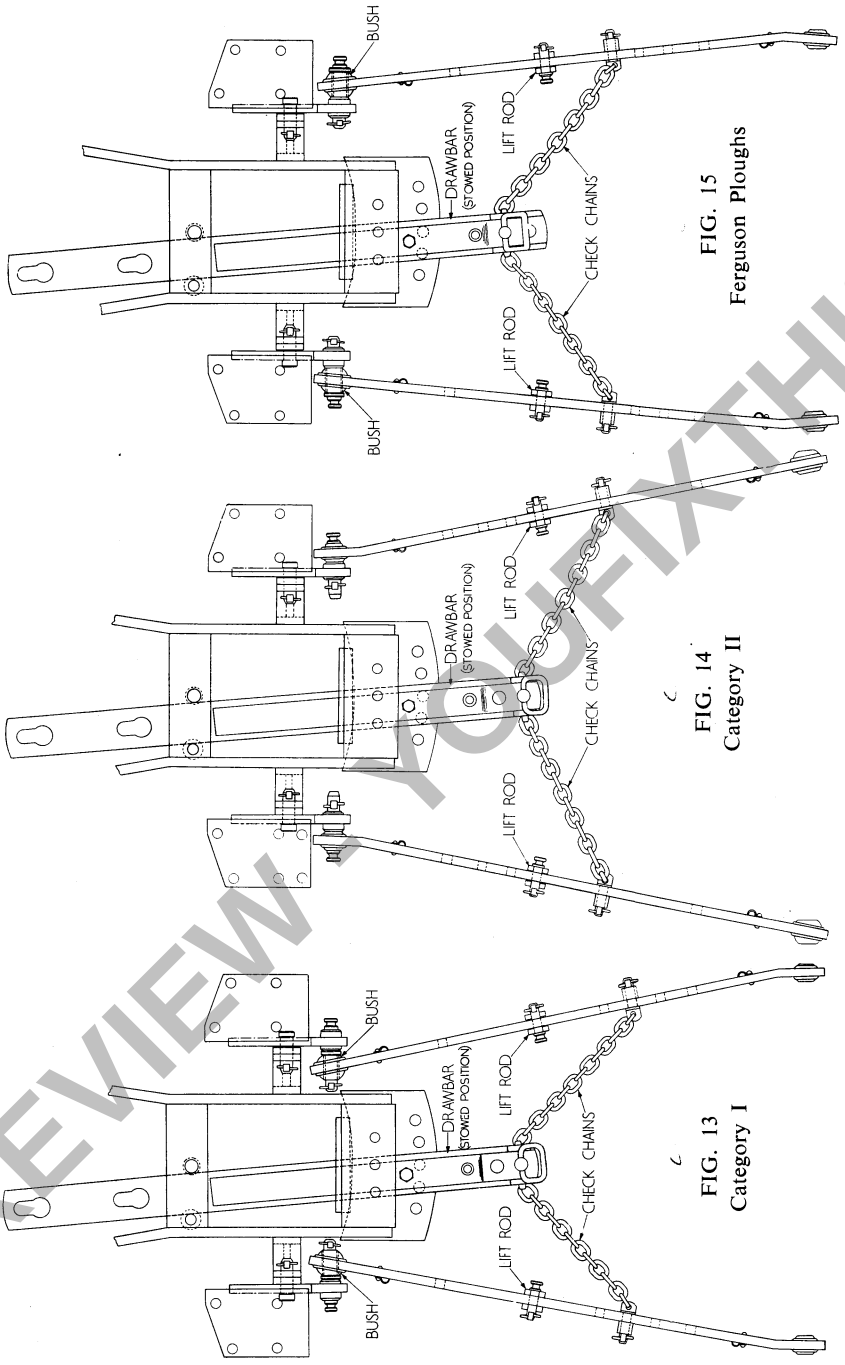

FIG. 15
Ferguson Ploughs

FIG. 14
Category II

FIG. 13
Category I

PREVIEW - YOUFIXTHIS.COM

Download full manual at youfixthis.com

depth has been determined by movement of the control lever, placing the pre-set guide at the selected position ensures instant return to the same depth each time the implement is lowered into work.

External Services

When hydraulic pressure is required for operating equipment such as tipping trailers, loaders, etc., the single lever becomes a simple 3-position "LIFT-HOLD-DROP" control. This is fully described at a later stage.

OPERATING THE IMPLEMATIC WITH DEPTH WHEEL CONTROLLED IMPLEMENTS

Referring to Fig. 20, move the pre-set guide so that the mark labelled "TCU" lines up with the arrow on the control housing. The control lever then has three positions of use. With the lever at A the implement will drop; this position is used when entering into work. At position B, TCU will be engaged and the desired amount can be adjusted by hand wheel C, Fig. 21. When the lever is pulled back to position C the implement will rise and remain at the top.

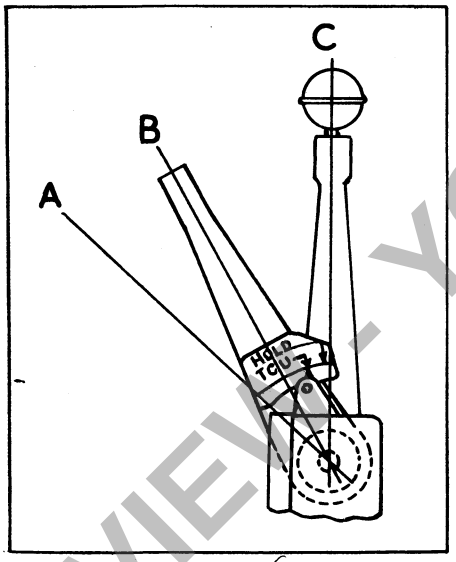

FIG. 20

CONTROL POSITIONS FOR IMPLEMENTS WITH DEPTH WHEEL

A. Move the Control Lever to this position to lower the implement
B. Position the Control Lever in line with the Pre-set Guide to apply TCU
C. Move the Control Lever to this position to raise the implement

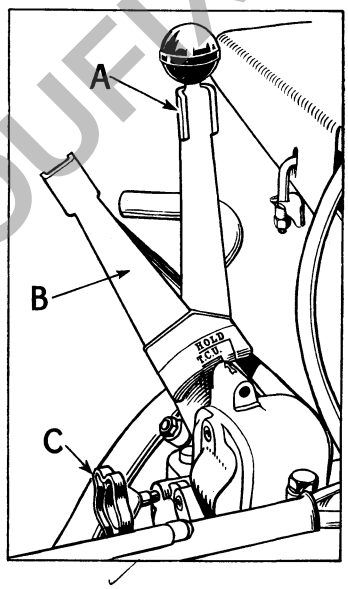

FIG. 21. CONTROLS

A. Control Lever
B. Pre-set Guide
C. TCU Hand Wheel

PREVIEW - YOUFIXTHIS.COM

Download full manual at youfixthis.com

Section 4

Information and Data

DIESEL ENGINE

AD4/40V and W Engine—Bore $3\frac{5}{8}$ in. (92·1 mm). Stroke 4 in. (101·6 mm). Capacity 165 in³ (2 705 cc).

Cooling System—Pressurised thermo-syphon with pump assistance and thermostatic control. Drillings in the head direct flow on to critical parts. A two bladed fan is fitted to the water pump drive pulley.

Fuel Equipment—C.A.V. D.P.A. type injection pump with mechanical governor. Automatic retard device for starting, with manual lock for very cold weather.
Mechanically operated A.C. Lift Pump.
Static timing set to mark on flywheel 11° b.t.c.
C.A.V. 4 hole injectors direct into cylinders.
Setting pressure 175 Atmospheres.
Paper element fuel filters in series.

Lubrication—Gear type oil pump incorporating a main relief valve set to commence opening at 40 lb/in² (2·8 kg/cm²).

Filtration is by means of a paper element full flow filter with a low pressure valve to by-pass oil if the element is allowed to become blocked. The overhead valve gear is supplied by intermittent restricted feed from the rear camshaft bearing.

Valve Timing—Inlet open 8° b.t.c., closes 38° a.b.c. Exhaust opens 36° b.b.c., closes at 10° a.t.c.

Firing Order—1, 2, 4, 3.

Valve Clearance—Set hot—Inlet and Exhaust 0·015 in. (0·38 mm).

Compression Ratio—17 : 1.

Power—37·5 b.h.p. at 1 800 rev/min and 42·5 b.h.p. at 2 200 rev/min.

Maximum Torque—112 lb ft (15·3 kg m) at 1 400 rev/min.

CAPACITIES (Approximate)

Cooling system	3 gallons (13·6 litres)
Engine lubricating oil	17 pints (9·6 litres)
Transmission lubricating oil	$3\frac{1}{2}$ gallons (16 litres)
Steering box oil bath	2 pints (1·1 litres)
Final drive lubricating oil (each)	4 pints (2.28 litres)
Fuel tank	$11\frac{1}{2}$ gallons (52·2 litres)
Air cleaner oil bath	$1\frac{1}{2}$ pints (0·85 litres)

PREVIEW - YOUFIXTHIS.COM

Download full manual at youfixthis.com

Introduction

The David Brown 950 Implematic has the most comprehensive specification of any tractor in volume production in the world. This book tells you how to take advantage of all these facilities and also how to maintain the efficiency of the tractor and ensure the long working life which has been built into it. A little time spent with this book familiarising yourself with the tractor will be amply repaid in cost and service.

To simplify the use of this book it has been divided into sections as follows:—

Section 1 covers the identification of the controls, etc. and the operation of the tractor in every respect from the driver's point of view.

Section 2 deals with the routine maintenance which **must** be carried out regularly (the modern equivalent of feeding and grooming the horse—and just as important).

Section 3, a detailed account of any servicing which may be required in alphabetical order.

Section 4 gives technical data, tables of speeds and capacities, etc., followed by a list of units and implements designed specially for use with the David Brown 950 Implematic tractor.

Should further assistance be required your David Brown Dealer will be pleased to give it and, of course, is most qualified to do so. In any enquiry always give the FULL SERIAL NUMBER of the tractor. The PREFIX V950 or W950 MUST BE QUOTED. The number is stamped on the front corner of the frame extension as well as on the name plate fixed to the front of the tool box.

Tractor Serial Number .....

Engine Serial Number .....

First Published October 1959

PREVIEW - YOUFIXTHIS.COM

Download full manual at youfixthis.com

PREVIEW ONLY

You're viewing 8 of 68 pages

The full manual includes:

- All 68 pages, complete
- Searchable PDF (find any keyword)
- No watermarks
- Instant download
- Print-ready quality

GET FULL MANUAL NOW

David Brown AD4/40V, AD4/40W, 950 IMPLEMATIC, 950 IMPLEMATIC LIVEDRIVE Operator Manual



Scan or click anywhere
youfixthis.com

Click anywhere on this page to get the full manual